DC Connectors
Chassis Sockets, Single-hole mounting

Solder Pins

SPECIFICATION:

Operating Voltage (Max.):	12 Vdc
Operating Current (Nom.):	5 Adc
Insulation Resistance (Min.):	1000 MΩ
Contact Resistance (Max.):	50 mΩ
Operating Life in Mating Cycles (Min.):	10000
Dielectric Strength:	500 Vac
Insertion Force (Max.):	12 N
Extraction Force:	3 N



MATERIAL:

Material (Terminal):	phosphor bronze, silver plated
Material (Housing):	nylon 66
Material (Contact Area):	brass, silver plated

HANDLING:

Packaging:	bulk

TOLERANCE:

.X:	± 0.20

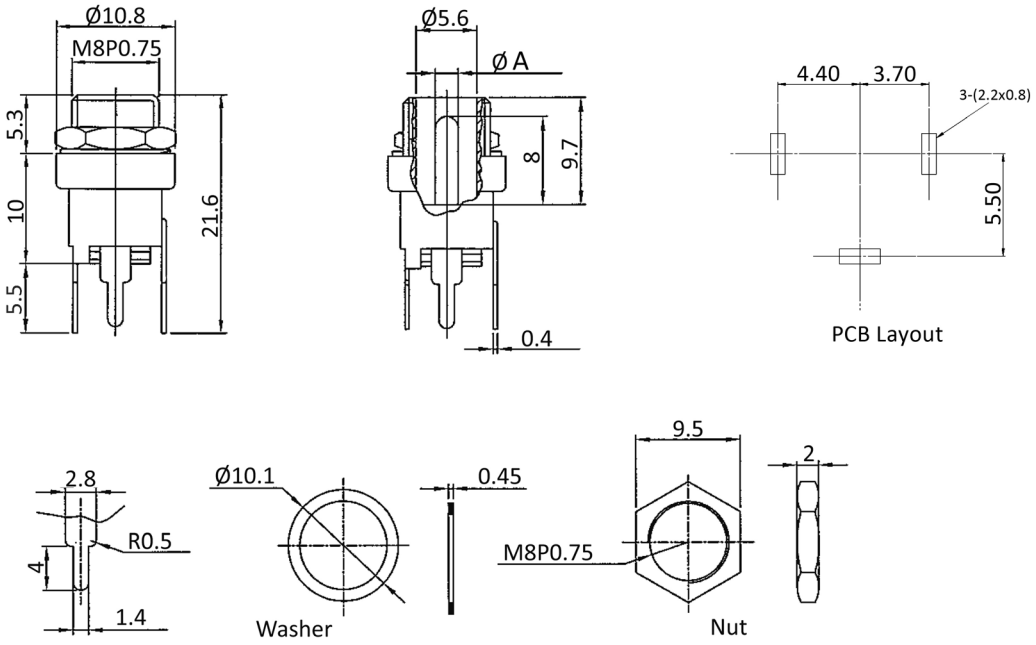

Order Information

Identifier:	Diameter Pin (A):
DCE5	#
DC socket vertical pcb mount	**AP:** diameter 2.1 mm
	BP: diameter 2.5 mm