DISPLAY Elektronik GmbH

DATA SHEET

LCD MODULE

DEM 240320A3 TMH-PW-N

Product Specification ***Version: 2***

16.09.2015

GENERAL SPECIFICATION

MODULE NO. :

DEM 240320A3 TMH-PW-N

CUSTOMER

VERSION NO.	CHANGE DESCRIPTION	DATE
0	ORIGINAL VERSION	17.07.2015
1	Add UL NO. , UPDATE PIN ASSIGNMENT, UPDATE OPTICAL CHARACTERISTICS, UPDATE BLACKLIGHT CHARACTERISTICS	23.07.2015
2	CHANGE DOUBLE TAPE LENGTH	16.09.2015

PREPARED BY: DJ DATE: 16.09.2015

APPROVED BY: MH DATE: 16.09.2015

CONTENTS

1. GENERAL SPECIFICATIONS **2**

2. EXTERNAL DIMENSIONS **3**

3. PIN ASSIGNMENT **4**

4. OPTICAL CHARACTERISTICS **5**

5. ABSOLUTE MAXIMUM RATINGS **8**

6. ELECTRICAL CHARACTERISTICS **8**

7. RELIABILITY TEST **9**

8. LCD MODULES HANDLING PRECAUTIONS **10**

9. OTHERS **10**

1. GENERAL SPECIFICATIONS

ITEM	Standard value	UNIT
LCD Type	TFT Transmissive	---
Driver element	a-Si TFT	
Number of Dots	240*(RGB)*320	Dots
Pixel Arrangement	RGB Vertical Stripe	
Active Area	33.84x45.12	mm
Viewing Area (W*H)		mm
Viewing Direction	6 O' clock	
Driver IC	HX83471	
LCM Module Size(W*H*T)	40.3x58.1x2.85	mm
Approx. Weight	TBD	g
Back Light	White LED	
System interface	8080 MCU 16 BIT, TYPE I	

2. EXTERNAL DIMENSIONS

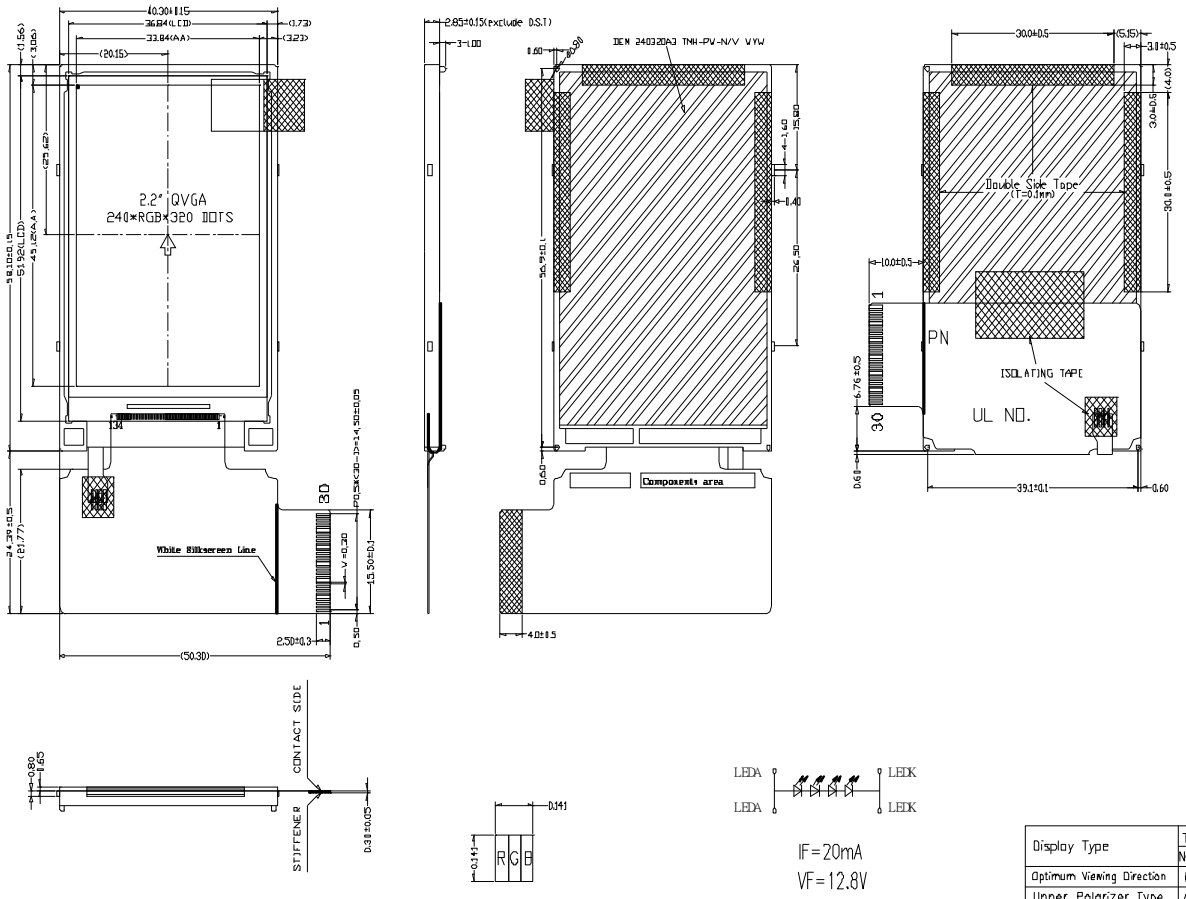

PIN DESCRIPTION

Pin	Symbol
1	IOVCC
2	VCI
3	RD
4	WR
5	RS
6	RESET
7	CS
8	DB0
9	DB1
10	DB2
11	DB3
12	DB4
13	DB5
14	DB6
15	DB7
16	DB8
17	DB9
18	DB10
19	DB11
20	DB12
21	DB13
22	DB14
23	DB15
24	DB16
25	DB17
26	GND
27	NC
28	LEDK
29	NC
30	LEDA

Display Type	TFT NORMAL WHITE TRANSMISSIVE
Optimum Viewing Direction	6 O'CLOCK
Upper Polarizer Type	Anti-Glare
LCD Driver IC	HX8347I
Operating Voltage	VCI=2.8V
Operation Temperature	-20°C TO 70°C
Storage Temperature	-30°C TO 80°C
Interface	8080 MCU 16-BIT,TYPE I
Backlight	4-LED WHITE(20mA@12.8V)
Surface luminance	280 cd/m² (TYP.)
White X/Y	---

Remarks:
1.Unmarked tolerance is ±0.2
2.All materials comply with RoHs
3.LED Lifetime:50000h

3. PIN ASSIGNMENT

<table>
<tr><th>No.</th><th>Symbol</th><th>Function</th><th>Remark</th></tr>
<tr><td>1</td><td>IOVCC</td><td>Power supply for I/O.</td><td></td></tr>
<tr><td>2</td><td>VCI</td><td>Power supply.</td><td></td></tr>
<tr><td>3</td><td>RD</td><td>Read signal.</td><td></td></tr>
<tr><td>4</td><td>WR</td><td>Write signal.</td><td></td></tr>
<tr><td>5</td><td>RS</td><td>Command/Data selection pin.</td><td></td></tr>
<tr><td>6</td><td>RESET</td><td rowspan="3">Reset signal.
Chip select signal. Low is accessed.</td><td rowspan="3"></td></tr>
<tr><td>7</td><td>CS</td></tr>
<tr><td>8</td><td>DB0</td></tr>
<tr><td>9</td><td>DB1</td><td rowspan="2">Data bus.</td><td rowspan="2"></td></tr>
<tr><td>10</td><td>DB2</td></tr>
<tr><td>11</td><td>DB3</td><td rowspan="3">Data bus.</td><td></td></tr>
<tr><td>12</td><td>DB4</td><td></td></tr>
<tr><td>13</td><td>DB5</td><td rowspan="2">System interface select.</td><td></td></tr>
<tr><td>14</td><td>DB6</td><td rowspan="13">
<table>
<tr><th>IM3</th><th>IM2</th><th>IM1</th><th>IM0</th><th>Interface</th><th>Data Bus use</th></tr>
<tr><td rowspan="2">0</td><td rowspan="2">0</td><td rowspan="2">0</td><td rowspan="2">0</td><td rowspan="2">8080 MCU 16-bit
Parallel type I</td><td rowspan="2">DB[15:0]</td></tr>
<tr></tr>
<tr><td rowspan="2">0</td><td rowspan="2">0</td><td rowspan="2">0</td><td rowspan="2">1</td><td rowspan="2">8080 MCU 8-bit
Parallel type I</td><td rowspan="2">DB[7:0]</td></tr>
<tr></tr>
<tr><td rowspan="2">1</td><td rowspan="2">0</td><td rowspan="2">0</td><td rowspan="2">0</td><td rowspan="2">8080 MCU 18-bit
Parallel type I</td><td rowspan="2">DB[17:0]</td></tr>
<tr></tr>
<tr><td rowspan="2">1</td><td rowspan="2">0</td><td rowspan="2">0</td><td rowspan="2">1</td><td rowspan="2">8080 MCU 9-bit
Parallel type I</td><td rowspan="2">DB[8:0]</td></tr>
<tr></tr>
</table>
</td><td></td></tr>
<tr><td>15</td><td>DB7</td><td></td></tr>
<tr><td>16</td><td>DB8</td><td></td></tr>
<tr><td>17</td><td>DB9</td><td></td></tr>
<tr><td>18</td><td>DB10</td><td></td></tr>
<tr><td>19</td><td>DB11</td><td></td></tr>
<tr><td>20</td><td>DB12</td><td></td></tr>
<tr><td>21</td><td>DB13</td><td></td></tr>
<tr><td>22</td><td>DB14</td><td></td></tr>
<tr><td>23</td><td>DB15</td><td></td></tr>
<tr><td>24</td><td>DB16</td><td></td></tr>
<tr><td>25</td><td>DB17</td><td></td></tr>
<tr><td>26</td><td>GND</td><td>Ground.</td><td></td></tr>
<tr><td>27</td><td>NC</td><td rowspan="4">No connection.
LED Cathode.
No connection.
LED Anode.</td><td rowspan="4"></td></tr>
<tr><td>28</td><td>LED-K</td></tr>
<tr><td>29</td><td>NC</td></tr>
<tr><td>30</td><td>LED-A</td></tr>
</table>

Note: Standard FPC setting: 16-Bit-Parallel type I

4. OPTICAL CHARACTERISTICS

ITEM		SYMBOL	CONDITIONS	SPECIFICATIONS			UNIT
				MIN.	TYP.	MAX	
Brightness		B	Viewing normal angle	--	280	--	Cd/m^2
Contrast Ratio		CR		250	350	--	--
Response Time		Tr+Tf		--	20	30	ms
CIE Color coordinate	Red	X_R		0.253	0.303	0.353	
		Y_R		0.309	0.359	0.409	
	Green	X_G		0.581	0.631	0.681	
		Y_G		0.265	0.315	0.365	
	Blue	X_B		0.261	0.311	0.361	
		Y_B		0.478	0.528	0.578	
	White	X_W		0.081	0.131	0.181	
		Y_W		0.119	0.169	0.219	
Viewing Angle	Hor.	θ_{X+}	Center CR>=10	40	45	--	Deg.
		θ_{X-}		40	45	--	
	Ver.	θ_{Y+}		45	50	--	
		θ_{Y-}		15	20	--	
Uniformity	Un				80		%

Note 1 : Definition of Viewing Angle θ_X and θ_Y :

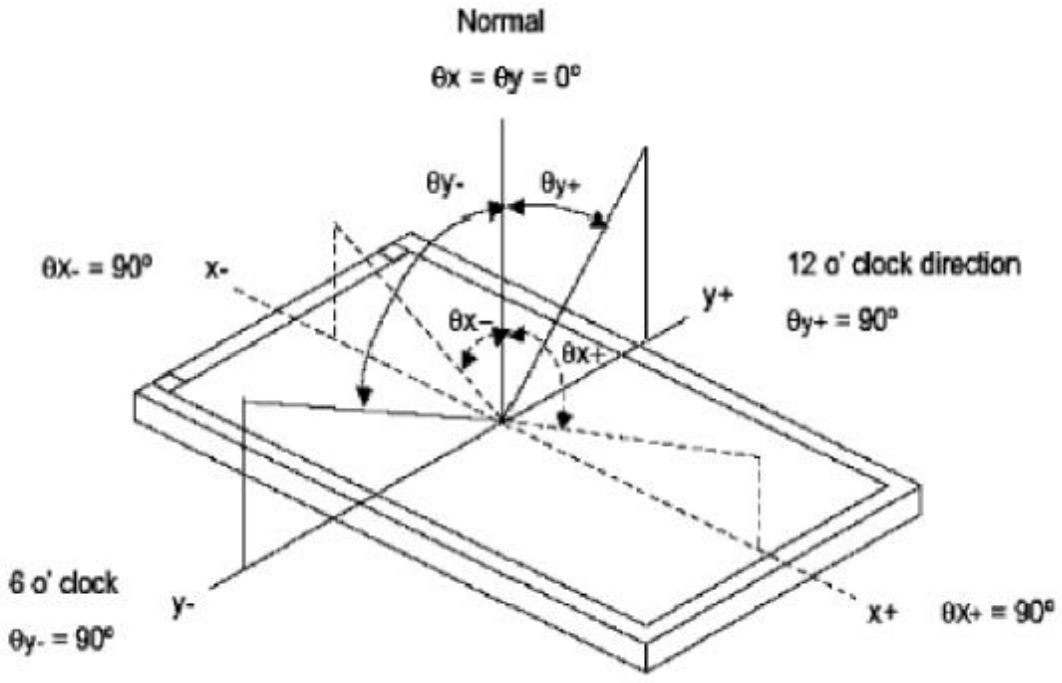

Note 2: Definition of contrast ratio CR:

$$CR = \frac{\text{Brightness of non-selected dots (white)}}{\text{Brightness of selected dots (black)}}$$

Note 3: Definition of response time (T_R, T_F)

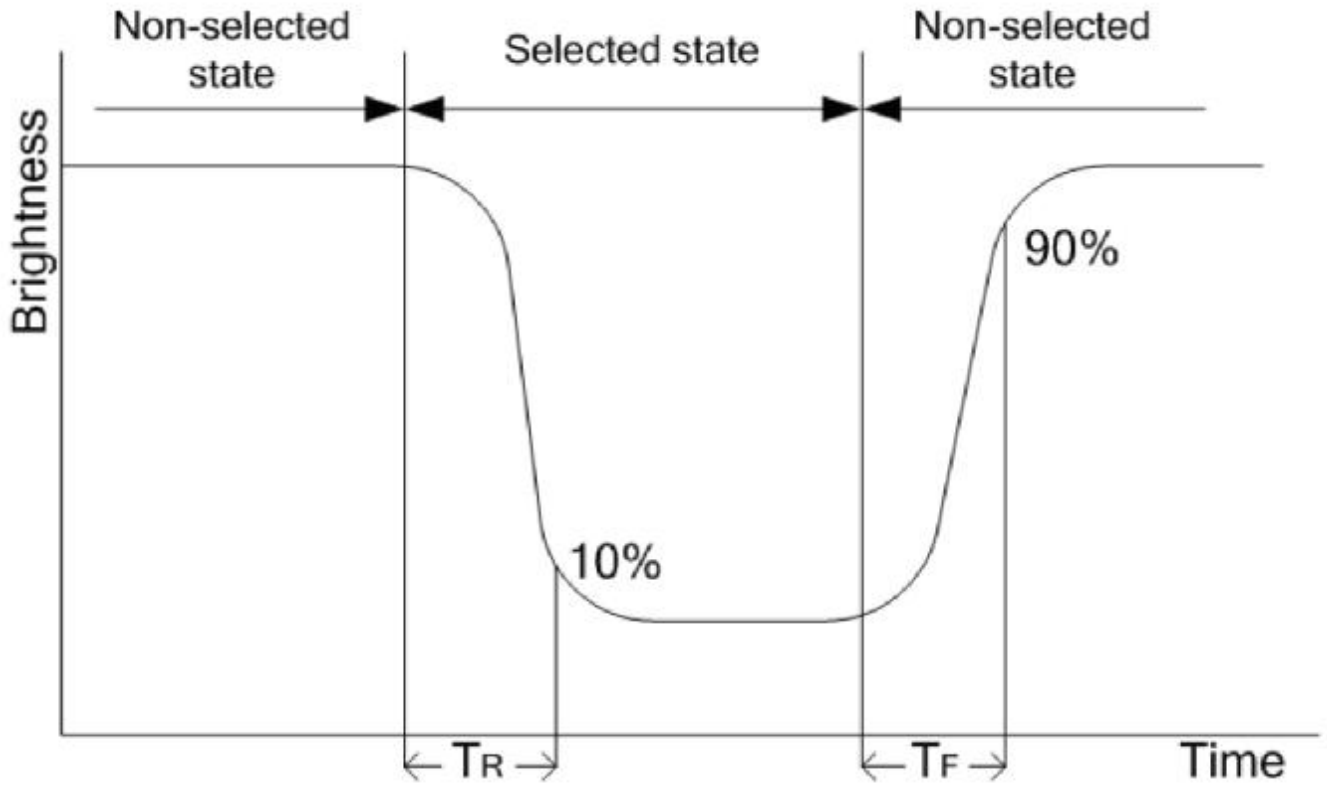

: The brightness test equipment setup

20mA Field=2° (As measuring "black" image, field=2° is the best testing condition)

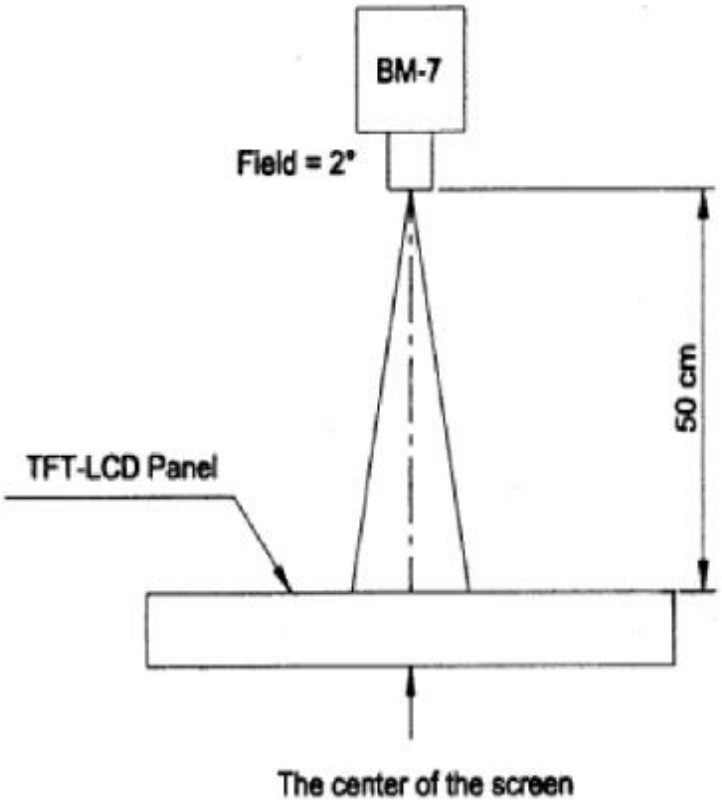

Note 4 :

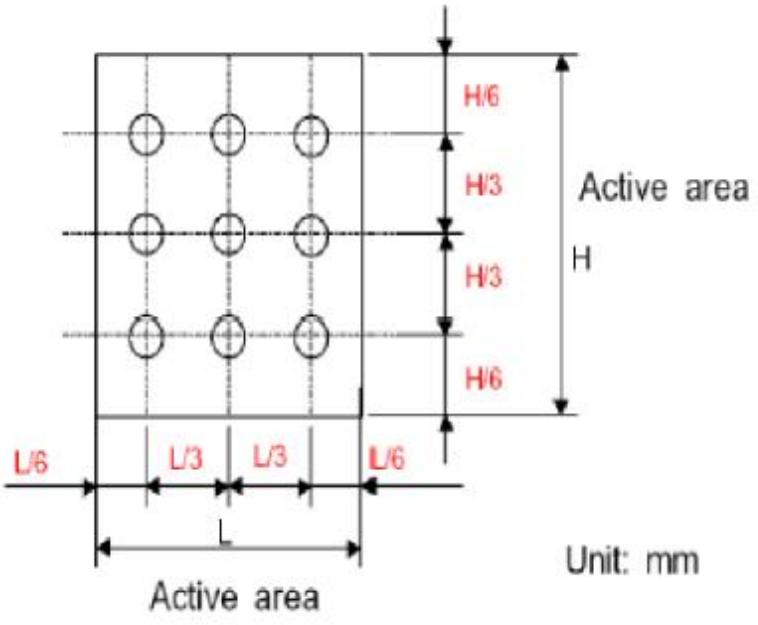

5. ABSOLUTE MAXIMUM RATINGS

Item	Symbol	Min.	Max.	Unit
Supply Voltage	VCI	-0.3	4.6	V
	IOVCC	-0.3	4.6	V
Storage Temperature	T_{STG}	-30	80	°C
Operating Temperature	T_{OP}	-20	70	°C

6. ELECTRICAL CHARACTERISTICS

6.1 DC CHARACTERISTICS

Item	Symbol	Min.	Typ.	Max.	Unit
Supply Voltage	VCI	2.3	2.8	3.3	V
	IOVCC	1.65	2.8	3.3	V
Logic Low Input Voltage	V_{IL}	GND	-	0.3*IOVCC	V
Logic High Input Voltage	V_{IH}	0.7*IOVCC	-	IOVCC	V
Logic Low Output Voltage	V_{OL}	GND	-	0.2*IOVCC	V
Logic High Output Voltage	V_{OH}	0.8*IOVCC	-	IOVCC	V

6.2 BACKLIGHT DRIVING CONDITIONS

Item	Symbol	Condition	Min	Typ	Max	Unit
Forward Voltage	V_F	Ta=25 °C, Ir=20mA/LED	11.6	12.8	13.6	V
Forward Current	I_F	Ta=25 °C, V_f =3.2V/LED	-	20	-	mA
Power Dissipation	P_D		-	256	-	mW
LED Life Time(25 °C)	-	-	(50,000)	-	-	hr
Uniformity	Avg		75	80	-	%
Drive Method	Constant current					
LED Configuration	4 White LEDs in series					

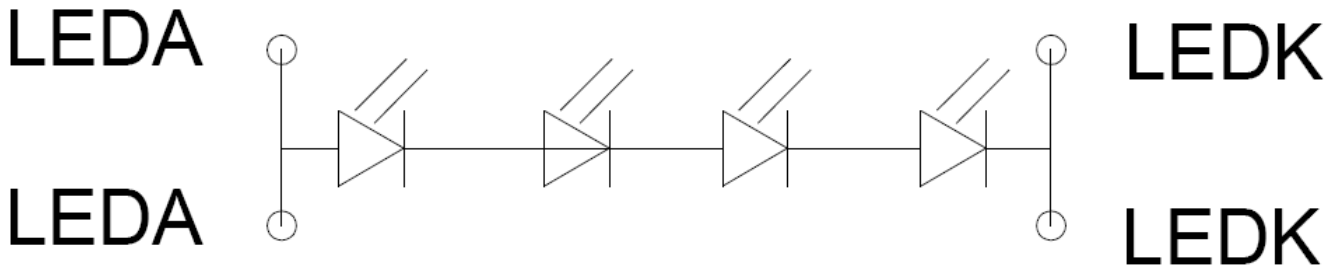

Backlight Circuit

6.3 AC CHARACTERISTICS

T.B.D

7. RELIABILITY TEST

No	Item	Description
01	High temperature operation	The sample should be allowed to stand at 70℃ for 120 hours under driving condition and then returning it to normal temperature condition, and allowing it stand for 2 hours.
02	Low temperature operation	The sample should be allowed to stand at -20℃ for 120 hours under driving condition and then returning it to normal temperature condition, and allowing it stand for 2 hours.
03	High temperature storage	The sample should be allowed to stand at 80℃ for 240 hours under no-load condition, and then returning it to normal temperature condition, and allowing it stand for 2 hours.
04	Low temperature storage	The sample should be allowed to stand at -30℃ for 240 hours under no-load condition, then returning it to normal temperature condition, and allowing it stand for 2 hours.
05	Moisture storage	The sample should be allowed to stand at 60℃,90%RH MAX for 240 hours under no-load condition, then taking it out and drying it at normal temperature for 2 hours.
06	Thermal shock storage	The sample should be allowed to stand the following 10 cycles : -30℃ for 30 minutes → normal temperature for 5 minutes → +80℃ for 30 minutes → normal temperature for 5 minutes, as one cycle.
07	Packing vibration	Frequency range : 10Hz ~ 55Hz Amplitude of vibration : 1.5mm Sweep time: 12 min X,Y,Z 2 hours for each direction.
08	Packing drop test	According to ASTM-D-5327.
09	Electrical Static Discharge	Air: ±4KV 150pF/330Ω 5 times Contact: ±2KV 150pF/330Ω 5 time

8. LCD MODULES HANDLING PRECAUTIONS

- The display panel is made of glass. Do not subject it to a mechanical shock by dropping it from a high place, etc.
- If the display panel is damaged and the liquid crystal substance inside it leaks out, do not get any in your mouth. If
- the substance come into contact with your skin or clothes promptly wash it off using soap and water.
- Do not apply excessive force to the display surface or the adjoining areas since this may cause the color tone to vary.
- The polarizer covering the display surface of the LCD module is soft and easily scratched. Handle this polarize carefully.
- To prevent destruction of the elements by static electricity, be careful to maintain an optimum work environment.
  -Be sure to ground the body when handling the LCD module.
  -Tools required for assembly, such as soldering irons, must be properly grounded.
  -To reduce the amount of static electricity generated, do not conduct assembly and other work under dry conditions.
  -The LCD module is coated with a film to protect the display surface. Exercise care when peeling off this protective film since static electricity may be generated.
- Storage precautions
  When storing the LCD modules, avoid exposure to direct sunlight or to the light of fluorescent lamps. Keep the modules in bags designed to prevent static electricity charging under low temperature / normal humidity conditions (avoid high temperature / high humidity and low temperatures below 0°C). Whenever possible, the LCD modules should be stored in the same conditions in which they were shipped from our company.

9. OTHERS

- Liquid crystals solidify at low temperature (below the storage temperature range) leading to defective orientation of liquid crystal or the generation of air bubbles (black or white). Air bubbles may also be generated if the module is subjected to a strong shock at a low temperature.
- If the LCD modules have been operating for a long time showing the same display patterns may remain on the screen as ghost images and a slight contrast irregularity may also appear. Abnormal operating status can be resumed to be normal condition by suspending use for some time. It should be noted that this phenomena does not adversely affect performance reliability.
- To minimize the performance degradation of the LCD modules resulting from caused by static electricity, etc. exercise care to avoid holding the following sections when handling the modules:
  - Exposed area of the printed circuit board
  - Terminal electrode sections.