60V Fault Protected RS485/RS422 Transceivers

FEATURES

- **Protected from Overvoltage Line Faults to ±60V**
- Pin Compatible with LTC485 and LTC491
- High Input Impedance Supports Up to 128 Nodes
- No Damage or Latchup to ESD
  - IEC-1000-4-2 Level 4: ±15kV Air Discharge
  - IEC-1000-4-2 Level 2: ±4kV Contact Discharge
- Controlled Slew Rates for EMI Emissions Control
- Guaranteed High Receiver Output State for Floating, Shorted or Inactive Inputs
- Outputs Assume a High Impedance When Off or Powered Down
- Drives Low Cost, Low Impedance Cables
- Short-Circuit Protection on All Outputs
- Thermal Shutdown Protection

APPLICATIONS

- Industrial Control Data Networks
- CAN Bus Applications
- HVAC Controls

DESCRIPTION

The LT®1785/LT1791 are half-duplex and full-duplex differential bus transceivers for RS485 and RS422 applications which feature on-chip protection from overvoltage faults on the data transmission lines. Receiver input and driver output pins can withstand voltage faults up to ±60V with respect to ground with no damage to the device. Faults may occur while the transceiver is active, shut down or powered off.

Data rates to 250kbaud on networks of up to 128 nodes are supported. Controlled slew rates on the driver outputs control EMI emissions and improve data transmission integrity on improperly terminated lines. Drivers are specified to operate with inexpensive cables as low as 72Ω characteristic impedance.

The LT1785A/LT1791A devices have “fail-safe” receiver inputs to guarantee a receiver output high for shorted, open or inactive data lines. On-chip ESD protection eliminates need for external protection devices.

The LT1785/LT1785A are available in 8-lead DIP and SO packages and the LT1791/LT1791A in 14-lead DIP and SO packages.

LT, LTC and LT are registered trademarks of Linear Technology Corporation.

TYPICAL APPLICATION

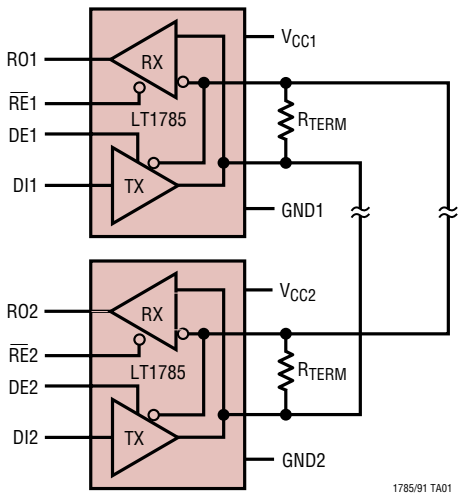

1785/91 TA01

Normal Operation Waveforms at 250kBaud

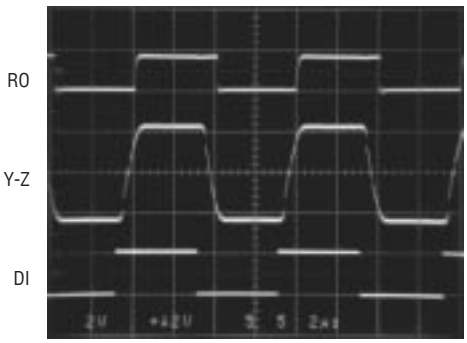

1785/91 TA02

ABSOLUTE MAXIMUM RATINGS (Note 1)

Supply Voltage (V_{CC}) 18V
Receiver Enable Input Voltage ..... –0.3V to 6V
Driver Enable Input Voltage ..... –0.3V to 6V
Driver Input Voltage ..... –0.3V to 18V
Receiver Input Voltage ..... –60V to 60V
Driver Output Voltage ..... – 60V to 60V
Receiver Output Voltage ..... –0.3V to (V_{CC} + 6V)

Operating Temperature Range
LT1785C/LT1791C/
LT1785AC/LT1791AC ..... 0°C to 70°C
LT1785I/LT1791I/
LT1785AI/LT1791AI ..... –40°C to 85°C
Storage Temperature Range ..... –65°C to 150°C
Lead Temperature (Soldering, 10 sec) ..... 300°C

PACKAGE/ORDER INFORMATION

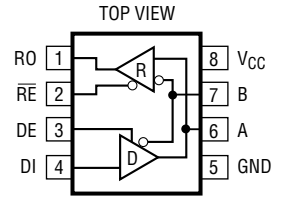

N8 PACKAGE
8-LEAD PDIP

S8 PACKAGE
8-LEAD PLASTIC SO

T_{JMAX} = 150°C, θ_{JA} = 130°C/W (N8)
T_{JMAX} = 150°C, θ_{JA} = 150°C/W (S8)

ORDER PART NUMBER

LT1785CN8
LT1785CS8
LT1785IN8
LT1785IS8
LT1785ACN8
LT1785ACS8
LT1785AIN8
LT1785AIS8

S8 PART MARKING

1785
1785I
1785A
1785AI

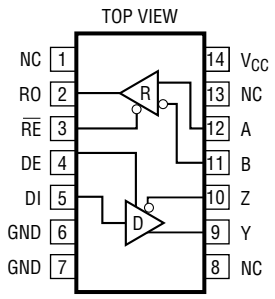

N PACKAGE
14-LEAD PDIP

S PACKAGE
14-LEAD PLASTIC SO

T_{JMAX} = 150°C, θ_{JA} = 130°C/W (N)
T_{JMAX} = 150°C, θ_{JA} = 150°C/W (S)

ORDER PART NUMBER

LT1791CN
LT1791CS
LT1791IN
LT1791IS
LT1791ACN
LT1791ACS
LT1791AIN
LT1791AIS

Consult factory for parts specified with wider operating temperature ranges.

DC ELECTRICAL CHARACTERISTICS

The ● denotes specifications which apply over the full operating temperature range, otherwise specifications are T_A = 25°C, V_{CC} = 5V.

SYMBOL	PARAMETER	CONDITIONS		MIN	TYP	MAX	UNITS
V_{OD1}	Differential Driver Output Voltage (Unloaded)	I_O = 0	●		4.1	5	V
V_{OD2}	Differential Driver Output Voltage (With Load)	R = 50Ω (RS422), Figure 1	●	2.0	2.70		V
		R = 27Ω (RS485), Figure 1	●	1.5	2.45		V
		R = 18Ω	●	1.2	2.2		V
ΔV_{OD}	Change in Magnitude of Driver Differential Output Voltage for Complementary Output States	R = 27Ω or R = 50Ω, Figure 1	●			0.2	V
V_{OC}	Driver Common Mode Output Voltage	R = 27Ω or R = 50Ω, Figure 1	●	2	2.5	3	V
$\Delta \lvert V_{OC} \rvert$	Change in Magnitude of Driver Common Mode Output Voltage for Complementary Output States	R = 27Ω or R = 50Ω, Figure 1	●			0.2	V
V_{IH}	Input High Voltage	DI, DE, $\overline{RE}$	●	2			V
V_{IL}	Input Low Voltage	DI, DE, $\overline{RE}$	●			0.8	V
I_{IN1}	Input Current	DI, DE, $\overline{RE}$	●			5	µA
I_{IN2}	Input Current (A, B); (LT1791 or LT1785 with DE = 0V)	V_{IN} = 12V	●		0.15	0.3	mA
		V_{IN} = –7V	●	–0.15	–0.08		mA
		–60V ≤ V_{IN} ≤ 60V	●	–6		6	mA
V_{TH}	Differential Input Threshold Voltage for Receiver	LT1785/LT1791: –7V ≤ V_{CM} ≤ 12V	●	–0.2		0.2	V
		LT1785A/LT1791A: –7V ≤ V_{CM} ≤ 12V	●	–0.2		0	V
ΔV_{TH}	Receiver Input Hysteresis	–7V < V_{CM} < 12V			20		mV
V_{OH}	Receiver Output High Voltage	I_O = –400µA, V_{ID} = 200mV	●	3.5	4		V
V_{OL}	Receiver Output Low Voltage	I_O = 1.6mA, V_{ID} = –200mV	●		0.3	0.5	V
	Three-State (High Impedance) Output Current at Receiver 0V < V_{OUT} < 6V	$\overline{RE}$ > 2V or Power Off	●	–1		1	µA
R_{IN}	Receiver Input Resistance (LT1791)	–7V ≤ V_{CM} ≤ 12V	●	85	125		kΩ
		– 60V ≤ V_{CM} ≤ 60V			125		kΩ
	LT1785	–7V ≤ V_{CM} ≤ 12V	●	50	90		kΩ
	RS485 Unit Load					0.25	
I_{SC}	Driver Short-Circuit Current	V_{OUT} = HIGH, Force V_O = –7V	●	35		250	mA
		V_{OUT} = LOW, Force V_O = 12V	●	35		250	mA
	Driver Output Fault Current	V_O = 60V	●			6	mA
		V_O = –60V	●	–6			mA
	Receiver Short-Circuit Current	0V ≤ V_O ≤ V_{CC}	●			±35	mA
	Driver Three-State Output Current	–7V ≤ V_O ≤ 12V	●	–0.2		0.3	mA
		–60V ≤ V_O ≤ 60V	●	–6		6	mA
I_{CC}	Supply Current	No Load, $\overline{RE}$ = 0V, DE = 5V	●		5.5	9	mA
		No Load, $\overline{RE}$ = 5V, DE = 5V	●		5.5	9	mA
		No Load, $\overline{RE}$ = 0V, DE = 0V	●		4.5	8	mA
		No Load, $\overline{RE}$ = 5V, DE = 0V	●		0.2	0.3	mA

SWITCHING CHARACTERISTICS

The ● denotes specifications which apply over the full operating temperature range, otherwise specifications are T_A = 25°C, V_{CC} = 5V.

SYMBOL	PARAMETER	CONDITIONS		MIN	TYP	MAX	UNITS
t_{PLH}	Driver Input to Output	Figures 3, 5	●		700	2000	ns
t_{PHL}	Driver Input to Output	Figures 3, 5	●		700	2000	ns
t_{SKEW}	Driver Output to Output	Figures 3, 5			100		ns
t_r, t_f	Driver Rise or Fall Time	Figures 3, 5	●	200	800	2000	ns
t_{ZH}	Driver Enable to Output High	Figures 4, 6	●		500	3000	ns
t_{ZL}	Driver Enable to Output Low	Figures 4, 6	●		800	3000	ns
t_{LZ}	Driver Disable Time from Low	Figures 4, 6	●		200	5000	ns
t_{HZ}	Driver Disable Time from High	Figures 4, 6	●		800	5000	ns
t_{PLH}	Receiver Input to Output	Figures 3, 7	●		400	900	ns
t_{PHL}	Receiver Input to Output	Figures 3, 7	●		400	900	ns
t_{SKD}	Differential Receiver Skew				200		ns
t_{ZL}	Receiver Enable to Output Low	Figures 2, 8	●		300	1000	ns
t_{ZH}	Receiver Enable to Output High	Figures 2, 8	●		300	1000	ns
t_{LZ}	Receiver Disable from Low	Figures 2, 8	●		400	1000	ns
t_{HZ}	Receiver Disable from High	Figures 2, 8	●		400	1000	ns
f_{MAX}	Maximum Data Rate		●	250			kbps
t_{SHDN}	Time to Shut Down	Figures 2, 6, 8			3		µs
$t_{ZH(SHDN)}$	Driver Enable from Shutdown to Output High	Figures 2, 6; $\overline{RE}$ = 5V			12		µs
$t_{ZL(SHDN)}$	Driver Enable from Shutdown to Output Low	Figures 2, 6; $\overline{RE}$ = 5V			12		µs
$t_{ZH(SHDN)}$	Receiver Enable from Shutdown to Output High	Figures 2, 8; DE = 0V			4		µs
$t_{ZL(SHDN)}$	Receiver Enable from Shutdown to Output Low	Figures 2, 8; DE = 0V			4		µs

Note 1: Absolute Maximum Ratings are those values beyond which the life of a device may be impaired.

TYPICAL PERFORMANCE CHARACTERISTICS

Driver Differential Output Voltage vs Load Resistance

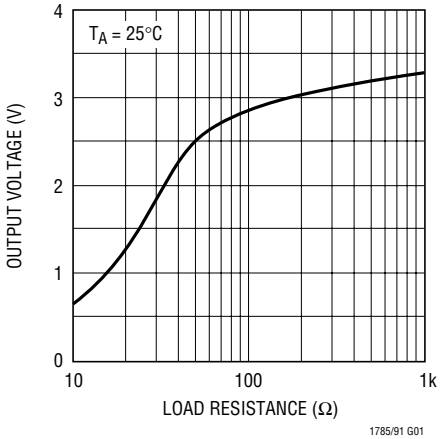

Driver Differential Output Voltage vs Temperature

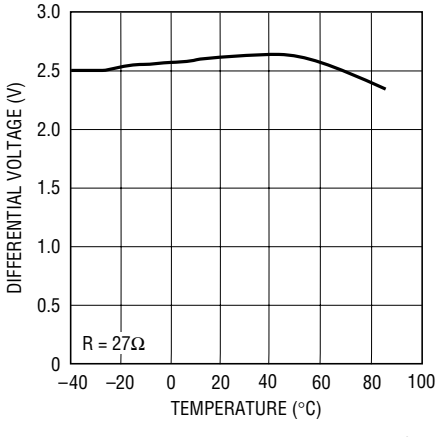

Receiver Propagation Delay vs Temperature

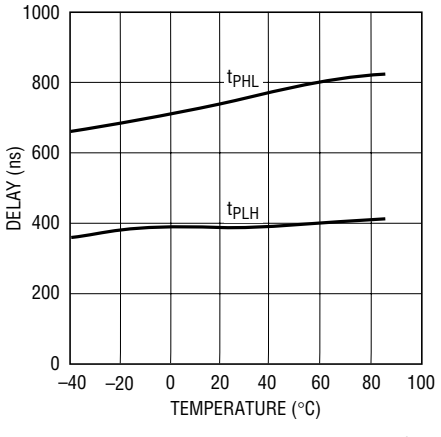

TYPICAL PERFORMANCE CHARACTERISTICS

Driver Propagation Delay vs Temperature

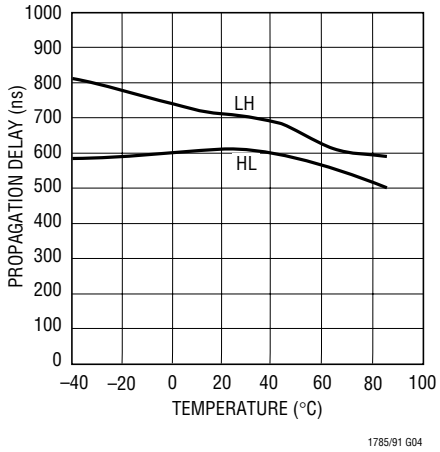

LT1791 Driver Output Leakage DE = 0V

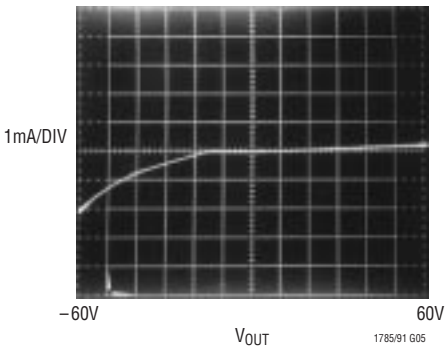

LT1791 Receiver Input Current vs V_{IN}

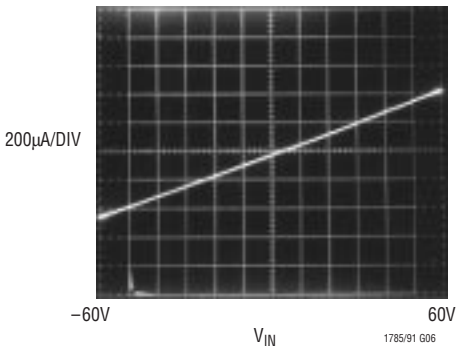

LT1785 Input Characteristics Pins A or B; DE = $\overline{RE}$ = 0V

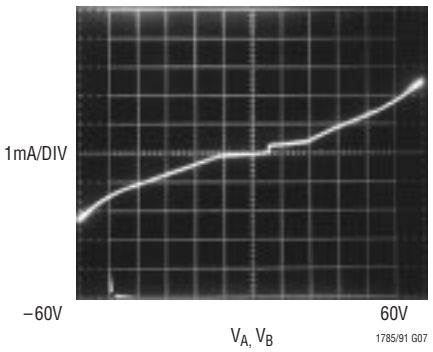

Supply Current vs Temperature

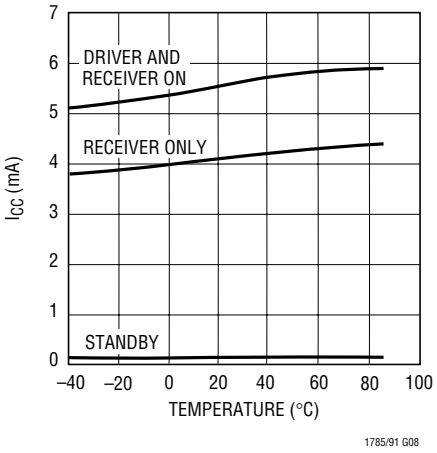

Receiver Propagation Delay vs Differential Input Voltage

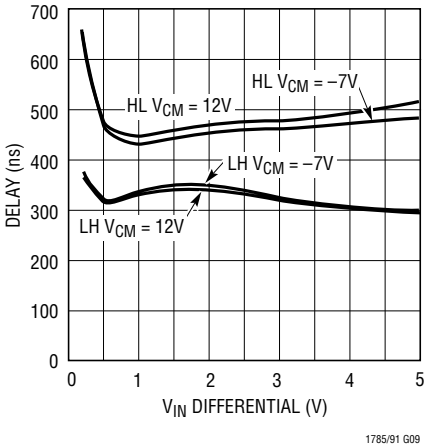

PIN FUNCTIONS

RO: Receiver Output. TTL level logic output. If the receiver is active ($\overline{RE}$ pin low), RO is high if receiver input A ≥ B by 200mV. If A ≤ B by 200mV, then RO will be low. RO assumes a high impedance output state when $\overline{RE}$ is high or the part is powered off. RO is protected from output shorts from ground to 6V.

$\overline{RE}$: Receiver Output Enable. TTL level logic input. A logic low on $\overline{RE}$ enables normal operation of the receiver output RO. A logic high level at $\overline{RE}$ places the receiver output pin RO into a high impedance state. If receiver enable $\overline{RE}$ and driver enable DE are both in the disable state, the circuit goes to a low power shutdown state. Placing either $\overline{RE}$ or DE into its active state brings the circuit out of shutdown. Shutdown state is not entered until a 3µs delay after both $\overline{RE}$ and DE are disabled, allowing for logic skews in toggling between transmit and receive modes of operation. For CAN bus applications, $\overline{RE}$ should be tied low to prevent the circuit from entering shutdown.

DE: Driver Output Enable. TTL level logic input. A logic high on DE enables normal operation of the driver outputs (Y and Z on LT1791, A and B on LT1785). A logic low level at DE places the driver output pins into a high impedance

PIN FUNCTIONS

state. If receiver enable $\overline{RE}$ and driver enable DE are both in the disable state, the circuit goes to a low power shutdown state. Placing either $\overline{RE}$ or DE into its active state brings the circuit out of shutdown. Shutdown state is not entered until a 3µs delay after both $\overline{RE}$ and DE are disabled, allowing for logic skews in toggling between transmit and receive modes of operation. For CAN bus operation the DE pin is used for signal input to place the data bus in dominant or recessive states.

DI: Driver Input. TTL level logic input. A logic high at DI causes driver output A or Y to a high state, and output B or Z to a low state. Complementary output states occur for DI low. For CAN bus applications DI should be tied low.

GND: Ground.

Y: Driver Output. The Y driver output is in phase with the driver input DI. In the LT1785 driver output Y is internally connected to receiver input A. The driver output assumes a high impedance state when DE is low, power is off or thermal shutdown is activated. The driver output is protected from shorts between ±60V in both active and high impedance modes. For CAN applications, output Y is the CANL output node.

Z: Driver Output. The Z driver output is opposite in phase to the driver input DI. In the LT1785 driver output Z is internally connected to receiver input B. The driver output assumes a high impedance state when DE is low, power is off or thermal shutdown is activated. The driver output is protected from shorts between ±60V in both active and high impedance modes. For CAN applications, output Z is the CANH output node.

A: Receiver Input. The A receiver input forces a high receiver output when V(A) ≥ [V(B) + 200mV]. V(A) ≤ [V(B) – 200mV] forces a receiver output low. Receiver inputs A and B are protected against voltage faults between ±60V. The high input impedance allows up to 128 LT1785 or LT1791 transceivers on one RS485 data bus.

The LT1785A/LT1791A have guaranteed receiver input thresholds –200mV < V_{TH} < 0. Receiver outputs are guaranteed to be in a high state for 0V inputs.

B: Receiver Input. The B receiver input forces a high receiver output when V(A) ≥ [V(B) + 200mV]. When V(A) ≤ [V(B) – 200mV], the B receiver forces a receiver output low. Receiver inputs A and B are protected against voltage faults between ±60V. The high input impedance allows up to 128 LT1785 or LT1791 transceivers on one RS485 data bus.

The LT1785A/LT1791A have guaranteed receiver input thresholds –200mV < V_{TH} < 0. Receiver outputs are guaranteed to be in a high state for 0V inputs.

V_{CC}: Positive Supply Input. For RS422 or RS485 operation, 4.75V ≤ V_{CC} ≤ 5.25V. Higher V_{CC} input voltages increase output drive swing. V_{CC} should be decoupled with a 0.1µF low ESR capacitor directly at Pin 8 (V_{CC}).

TEST CIRCUITS

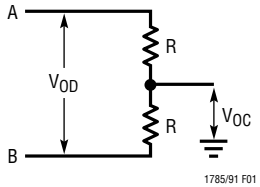

Figure 1. Driver DC Test Load

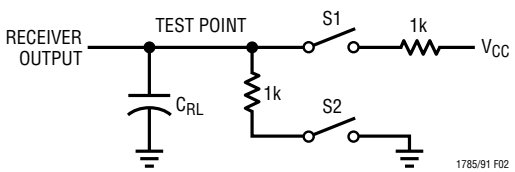

Figure 2. Receiver Timing Test Load

TEST CIRCUITS

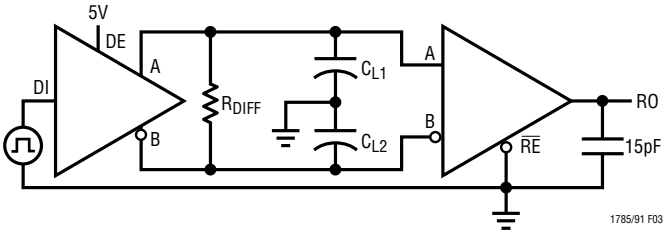

Figure 3. Driver/Receiver Timing Test Circuit

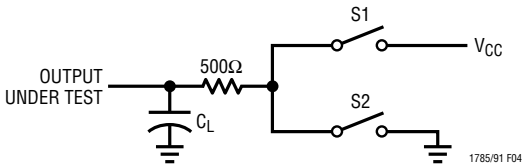

Figure 4. Driver Timing Test Load

FUNCTION TABLES

LT1785 Transmitting

INPUTS			OUTPUTS		
$\overline{RE}$	DE	DI	A	B	RO
0	1	0	0	1	0
0	1	1	1	0	1
1	0	X	Hi-Z	Hi-Z	Hi-Z
1	1	0	0	1	Hi-Z
1	1	1	1	0	Hi-Z

LT1785 Receiving

INPUTS				OUTPUT
$\overline{RE}$	DE	DI	A-B	RO
0	0	X	≤–200mV	0
0	0	X	≥200mV*	1
0	0	X	Open	1
1	0	X	X	Hi-Z

* ≥ 0mV for LT1785A

LT1791

INPUTS				OUTPUTS		
$\overline{RE}$	DE	DI	A-B	Y	Z	RO
0	0	X	≤–200mV	Hi-Z	Hi-Z	0
0	0	X	≥200mV*	Hi-Z	Hi-Z	1
0	0	X	Open	Hi-Z	Hi-Z	1
0	1	0	≤–200mV	0	1	0
0	1	0	≥200mV*	0	1	1
0	1	0	Open	0	1	1
0	1	1	≤–200mV	1	0	0
0	1	1	≥200mV*	1	0	1
0	1	1	Open	1	0	1
1	0	X	X	Hi-Z	Hi-Z	Hi-Z
1	1	0	X	0	1	Hi-Z
1	1	1	X	1	0	Hi-Z

* ≥ 0mV for LT1791A

SWITCHING TIME WAVEFORMS

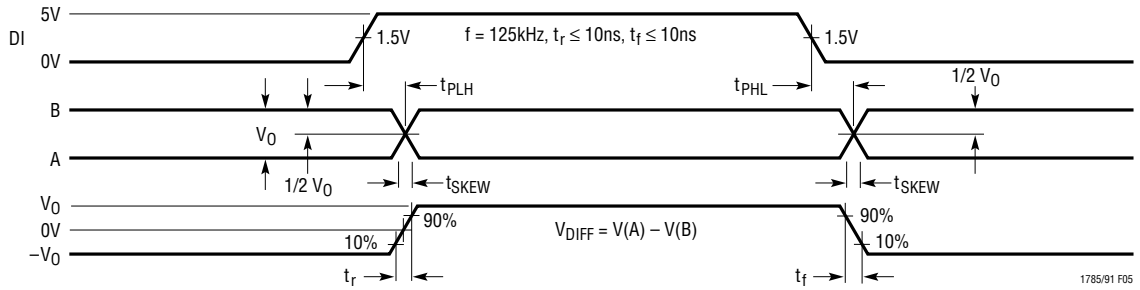

Figure 5. Driver Propagation Delays

SWITCHING TIME WAVEFORMS

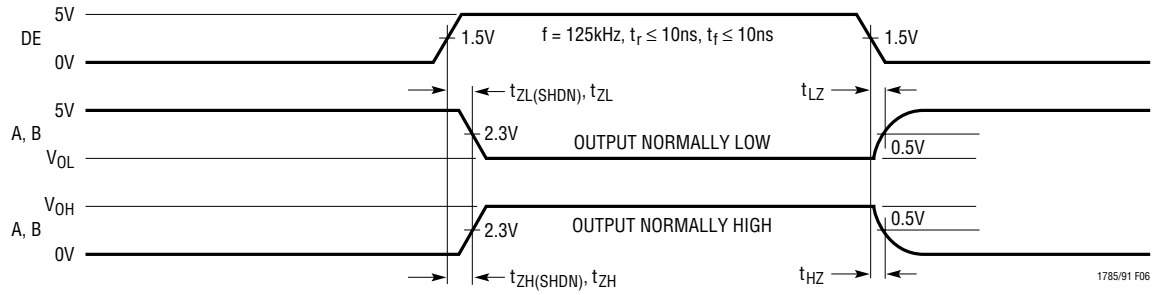

Figure 6. Driver Enable and Disable Times

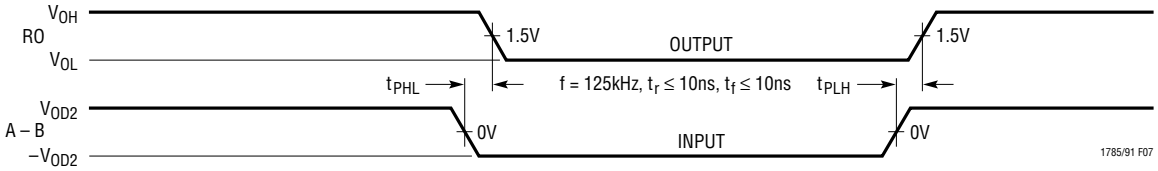

Figure 7. Receiver Propagation Delays

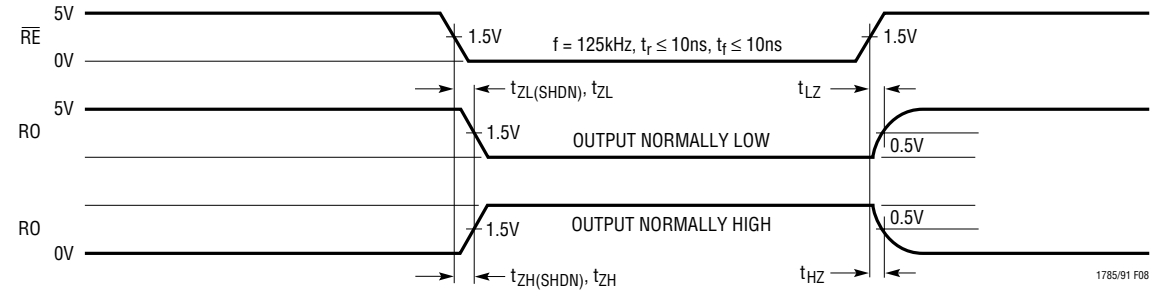

Figure 8. Receiver Enable and Disable Times

APPLICATIONS INFORMATION

Overvoltage Protection

The LT1785/LT1791 RS485/RS422 transceivers answer an applications need for overvoltage fault tolerance on data networks. Industrial installations may encounter common mode voltages between nodes far greater than the –7V to 12V range specified for compliance to RS485 standards. CMOS RS485 transceivers can be damaged by voltages above their absolute maximum ratings of typically –8V to 12.5V. Replacement of standard RS485 transceiver components with the LT1785 or LT1791 devices eliminates field failures due to overvoltage faults or the use of costly external protection devices. The limited overvoltage tolerance of CMOS RS485 transceivers makes implementation of effective external protection networks difficult without interfering with proper data network performance within the –7V to 12V region of RS485 operation.

APPLICATIONS INFORMATION

The high overvoltage rating of the LT1785/LT1791 facilitates easy extension to almost any level. Simple discrete component networks that limit the receiver input and driver output voltages to less than ±60V can be added to the device to extend protection to any desired level. Figure 11 shows a protection network against faults to the 120VAC line voltage.

The LT1785/LT1791 protection is achieved by using a high voltage bipolar integrated circuit process for the transceivers. The naturally high breakdown voltages of the bipolar process provides protection in powered-off and high impedance conditions. The driver outputs use a foldback current limit design to protect against overvoltage faults while still allowing high current output drive.

ESD Protection

The LT1785/LT1791 I/O pins have on-chip ESD protection circuitry to eliminate field failures caused by discharges to exposed ports and cables in application environments. The LT1785 pins A and B and the LT1791 driver output pins Y and Z are protected to IEC-1000-4-2 level 2. These pins will survive multiple ESD strikes of ±15kV air discharge or ±4kV contact discharge. Due to their very high input impedance, the LT1791 receiver pins are protected to IEC-1000-4-2 level 2, or ±15kV air and ±4kV contact discharges. This level of ESD protection will guarantee immunity from field failures in all but the most severe ESD environments. The LT1791 receiver input ESD tolerance may be increased to IEC level 4 compliance by adding 2.2k resistors in series with these pins.

Low Power Shutdown

The LT1785/LT1791 have $\overline{RE}$ and DE logic inputs to control the receive and transmit modes of the transceivers. The $\overline{RE}$ input allows normal data reception when in the low state. The receiver output goes to a high impedance state when $\overline{RE}$ is high, allowing multiplexing the RO data line. The DE logic input performs a similar function on the driver outputs. A high state on DE activates the differential driver outputs, a low state places both driver outputs into high impedance. Tying the $\overline{RE}$ and DE logic inputs together may be done to allow one logic signal to toggle the transceiver from receive to transmit modes. The DE input is used as the data input in CAN bus applications.

Disabling both the driver and receiver places the device into a low supply current shutdown mode. An internal time delay of 3µs minimum prevents entering shutdown due to small logic skews when a toggle between receive and transmit is desired. The recovery time from shutdown mode is typically 12µs. The user must be careful to allow for this wake-up delay from shutdown mode. To allow full 250kbaud data rate transmission in CAN applications, the $\overline{RE}$ pin should be tied low to prevent entering shutdown mode.

Slew Limiting for EMI Emissions Control

The LT1785/LT1791 feature controlled driver output slew rates to control high frequency EMI emissions from equipment and data cables. The slew limiting limits data rate operation to 250kbaud. Slew limiting also mitigates the adverse affects of imperfect transmission line termination caused by stubs or mismatched cable. In some low speed, short distance networks, cable termination may be eliminated completely with no adverse effect on data transmission.

Data Network Cable Selection and Termination

Long distance data networks operating at high data transmission rates should use high quality, low attenuation cable with well-matched cable terminations. Short distance networks at low data rates may use much less expensive PVC cable. These cables have characteristic impedances as low as 72Ω. The LT1785/LT1791 output drivers are guaranteed to drive cables as low as 72Ω.

APPLICATIONS INFORMATION

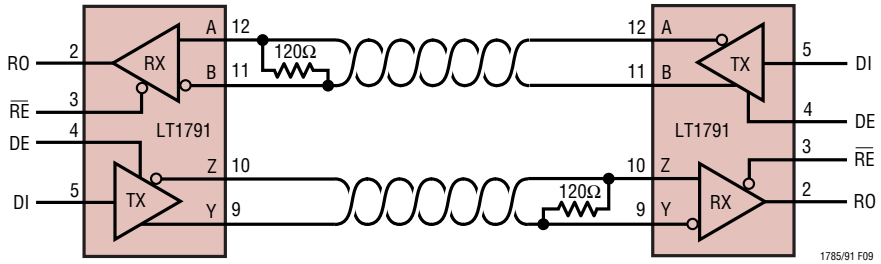

Figure 9. Full-Duplex RS422

PACKAGE DESCRIPTION

Dimensions in inches (millimeters) unless otherwise noted.

N8 Package
8-Lead PDIP (Narrow 0.300)
(LTC DWG # 05-08-1510)

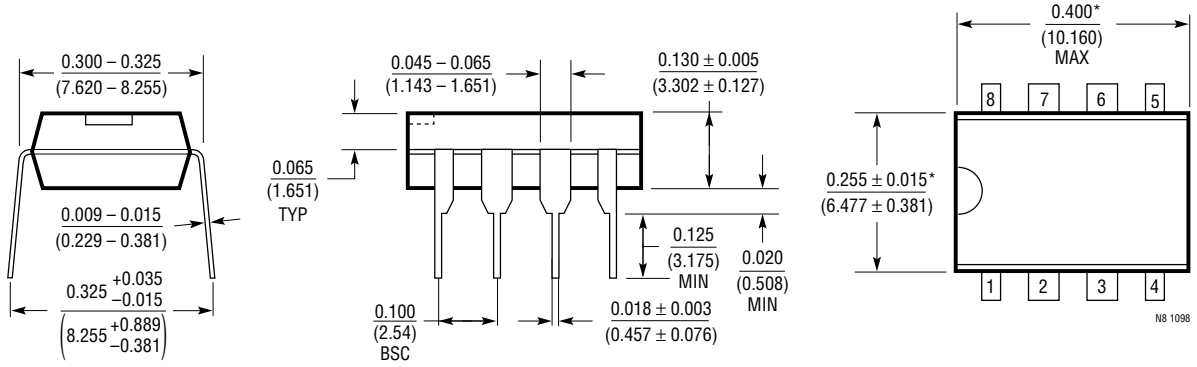

*THESE DIMENSIONS DO NOT INCLUDE MOLD FLASH OR PROTRUSIONS.
MOLD FLASH OR PROTRUSIONS SHALL NOT EXCEED 0.010 INCH (0.254mm)

S8 Package
8-Lead Plastic Small Outline (Narrow 0.150)
(LTC DWG # 05-08-1610)

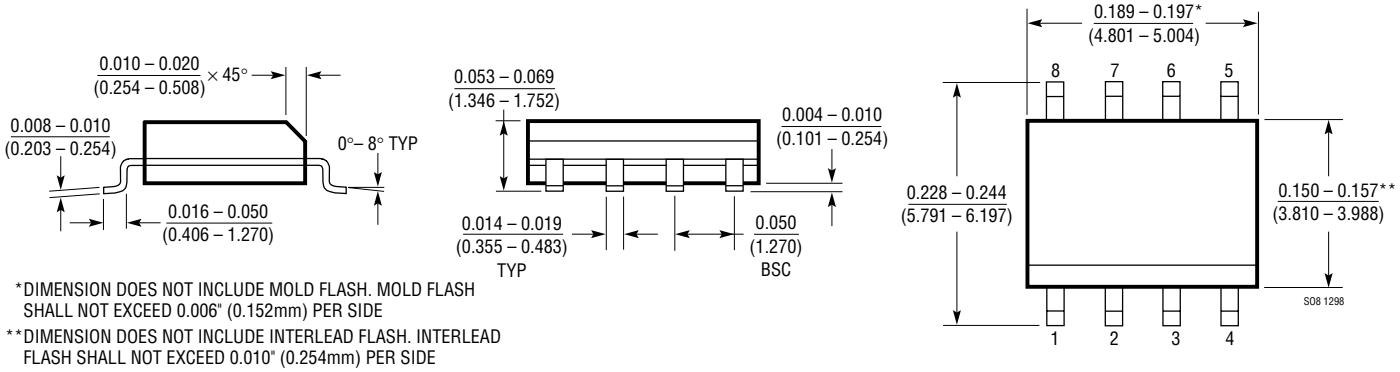

*DIMENSION DOES NOT INCLUDE MOLD FLASH. MOLD FLASH SHALL NOT EXCEED 0.006" (0.152mm) PER SIDE

**DIMENSION DOES NOT INCLUDE INTERLEAD FLASH. INTERLEAD FLASH SHALL NOT EXCEED 0.010" (0.254mm) PER SIDE

PACKAGE DESCRIPTION

Dimensions in inches (millimeters) unless otherwise noted.

N Package
14-Lead PDIP (Narrow 0.300)
(LTC DWG # 05-08-1510)

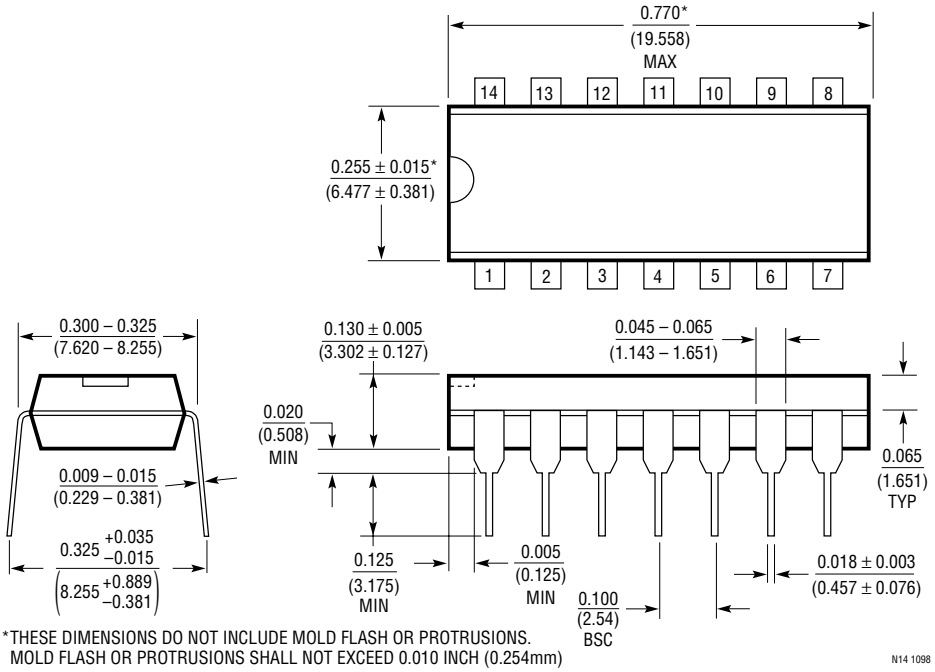

*THESE DIMENSIONS DO NOT INCLUDE MOLD FLASH OR PROTRUSIONS.
MOLD FLASH OR PROTRUSIONS SHALL NOT EXCEED 0.010 INCH (0.254mm)

S Package
14-Lead Plastic Small Outline (Narrow 0.150)
(LTC DWG # 05-08-1610)

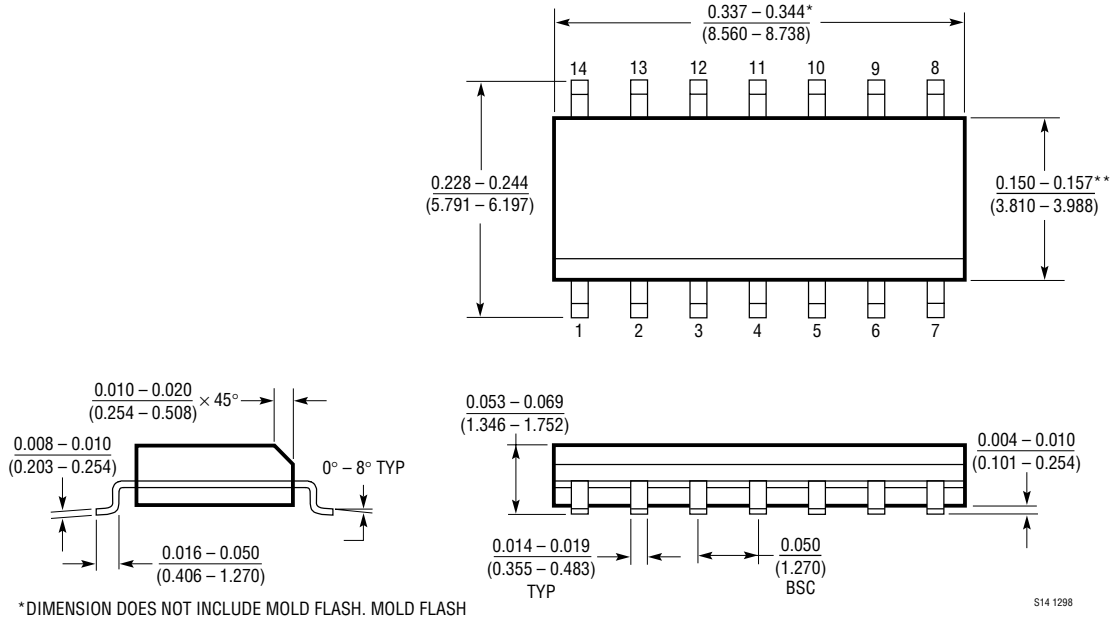

*DIMENSION DOES NOT INCLUDE MOLD FLASH. MOLD FLASH SHALL NOT EXCEED 0.006" (0.152mm) PER SIDE

**DIMENSION DOES NOT INCLUDE INTERLEAD FLASH. INTERLEAD FLASH SHALL NOT EXCEED 0.010" (0.254mm) PER SIDE

Information furnished by Linear Technology Corporation is believed to be accurate and reliable. However, no responsibility is assumed for its use. Linear Technology Corporation makes no representation that the interconnection of circuits as described herein will not infringe on existing patent rights.

TYPICAL APPLICATIONS

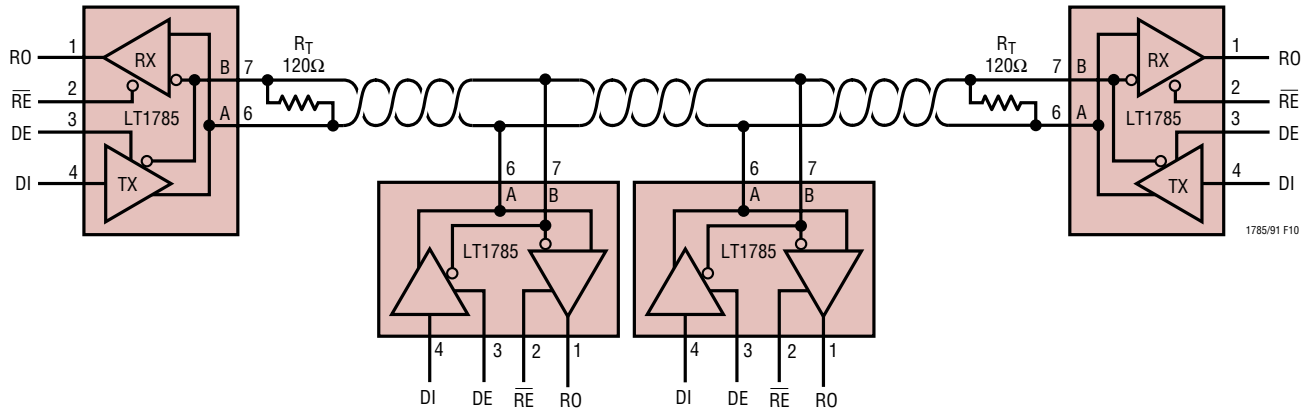

Figure 10. Half-Duplex RS485 Network Operation

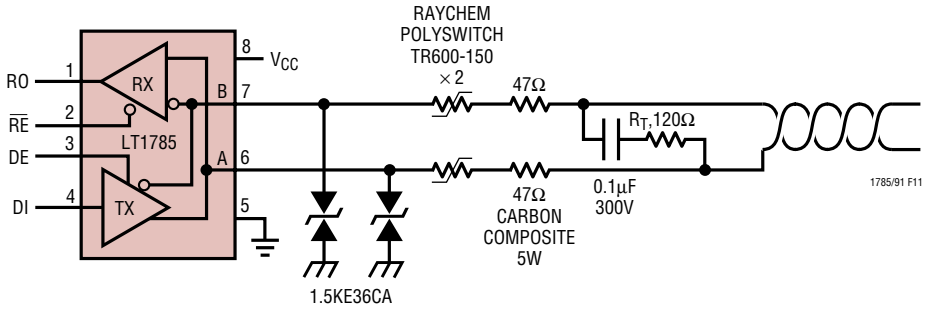

Figure 11. RS485 Network with 120V AC Line Fault Protection

RELATED PARTS

PART NUMBER	DESCRIPTION	COMMENTS
LTC485	Low Power RS485 Interface Transceiver	I_{CC} = 300µA (Typ)
LTC491	Differential Driver and Receiver Pair	I_{CC} = 300µA
LTC1483	Ultralow Power RS485 Low EMI Transceiver	Controlled Driver Slew Rate
LTC1485	Differential Bus Transceiver	10Mbaud Operation
LTC1487	Ultralow Power RS485 with Low EMI, Shutdown and High Input Impedance	Up to 256 Transceivers on the Bus
LTC1520	50Mbps Precision Quad Line Receiver	Channel-to-Channel Skew 400ps (Typ)
LTC1535	Isolated RS485 Full-Duplex Transceiver	2500V_{RMS} Isolation in Surface Mount Package
LTC1685	52Mbps RS485 Half-Duplex Transceiver	Propagation Delay Skew 500ps (Typ)
LTC1687	52Mbps RS485 Full-Duplex Transceiver	Propagation Delay Skew 500ps (Typ)

Linear Technology Corporation
1630 McCarthy Blvd., Milpitas, CA 95035-7417
(408)432-1900 • FAX: (408) 434-0507 • www.linear-tech.com
178591fa LT/TP 0501 2K REV A • PRINTED IN THE USA
© LINEAR TECHNOLOGY CORPORATION 1998