Your success is our motivation

intelligent touch+printer

EasyLoad-pBox

ITP-628-GCT-232.S*

Features

- Fujitsu thermal printer FTP-628 Series
- Paper width 58mm
- Paper roll diameter 30mm
- Printing speed 60mm/sec
- Text, graphics, barcode 39
- Win95/98, 2000, NT, CE, . . .
- Linux drivers on reqeust
- 5.0VDC up to 8.5VDC
- Operating temp. 0°C to +50°C
- Dimensions 82,3 x 77,4 x 38,5mm
- Housing colour*

  S = black case

  A = anthrazit case

  LG = light gray case

Made in Germany!



Dimensions EasyLoad-pBox

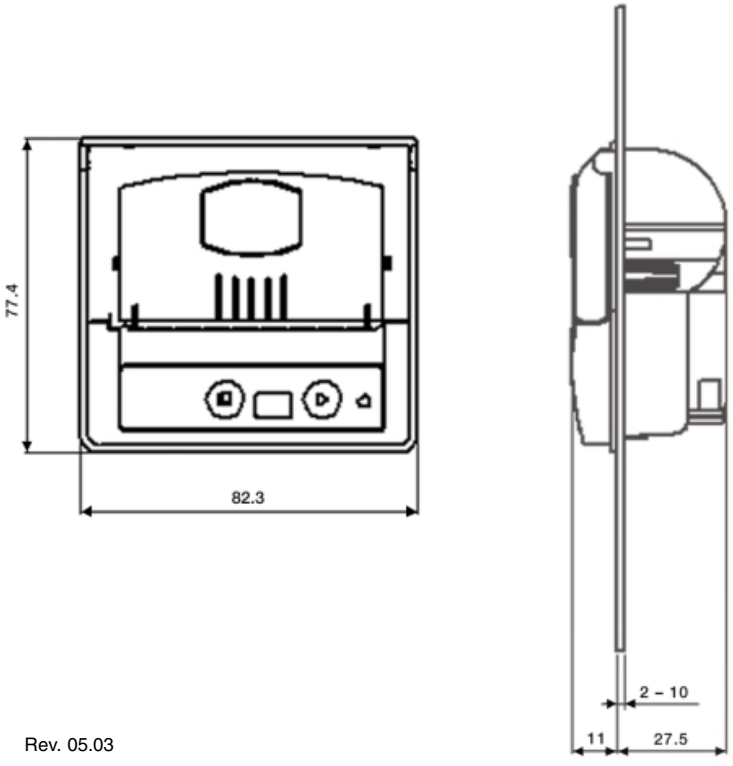

Dimensions mounting hole

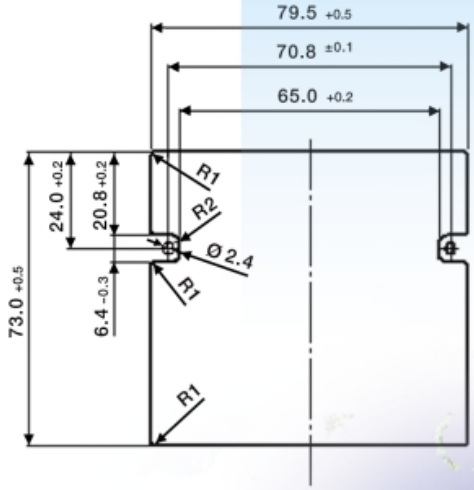

Rev. 05.03

www.itpsyso.com

Your reliable partner in touch panel & thermal printer systems & solutions

SHORT FORM SPECIFICATION
"ITP-628-GCT-232.S"

Item	Specification
Dimension WxDxH (mm)	82,3 x 77,4 x 38,5
Paper width	58 +0/-1mm
Paper roll size	max. diameter of 30 mm
Printing method	thermal
Number of dots	384
Dot density	8 dots/mm
Effective print width	48 mm
Voltage range	5VDC … 8.5VDC
Current consumtion	operating 120mA, printing programmable
Printing speed	character 60mm/sec, graphic 30…60mm/s
Interface	Serial RS232
Data format	57.300 baud standard, 115.200 optional
Font set	Western (Code 850, char 32-159)
Character type	Normal, Bold, Underline, Italic, Reverse
Default font	16x28
Barcode	Code 39
Graphics	normal/compressed

Rev. 02/03

Item		Specification
Operating temperature		0°C … +50°C
Operating humidity		10…90% RH (no condensation)
Storage temperature		-40°C … +85°C
Storage humidity		0…90% RH (no condensation)
EMC:	Emmision	E-Field EN50081-1-1 Conducted EN50081-1-2
	Immunity	E-Field EN50082-1-1 Conducted EN50082-1-2 Over voltage EN50082-1-3
	ESD	Contact discharge 4kV Air discharge 8kV
Drivers		Win9x, WinCE, WinNT, Linux
Approvals		CE, UL
General features: handshake function, power self test, paper detection, auto load function, form feed, line feed function		
Durability	Thermal head	100 million pulse
	Paper	50 km of paper
	Cover group (open/close cycles)	5.000 cycles and more

Rev. 01/03