- **Single-Chip and Single-Supply Interface for IBM™ PC/AT™ Serial Port**
- **RS-232 Bus-Pin ESD Protection Exceeds ±15 kV Using Human-Body Model (HBM)**
- **Meets or Exceeds the Requirements of TIA/EIA-232-F and ITU v.28 Standards**
- **Operates With 3-V to 5.5-V V_{CC} Supply**
- **Three Drivers and Five Receivers**
- **Operates Up To 250 kbit/s**
- **Designed to Transmit at a Data Rate of 250 kbit/s**
- **Low Standby Current . . . 1 μA Typical**
- **External Capacitors . . . 4 × 0.1 μF**
- **Accepts 5-V Logic Input With 3.3-V Supply**
- **Always-Active Noninverting Receiver Output (ROUT2B)**
- **Alternative High-Speed Pin-Compatible Device (1 Mbit/s)**
  - **SNx5C3243**
- **Serial-Mouse Driveability**
- **Auto-Powerdown Feature to Disable Driver Outputs When No Valid RS-232 Signal Is Sensed**
- **Applications**
  - **Battery-Powered Systems, PDAs, Notebooks, Laptops, Palmtop PCs, and Hand-Held Equipment**

DB, DW, OR PW PACKAGE
(TOP VIEW)

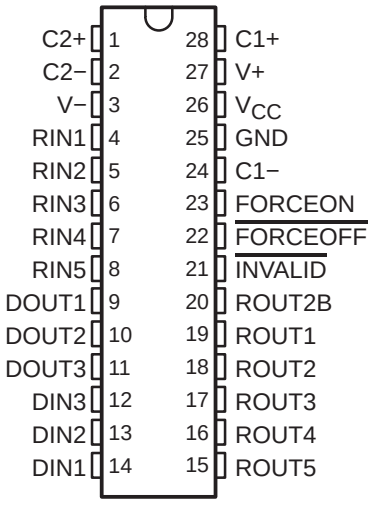

description/ordering information

The MAX3243 consists of three line drivers, five line receivers, and a dual charge-pump circuit with ±15-kV ESD (HBM) protection pin to pin (serial-port connection pins, including GND). The device meets the requirements of TIA/EIA-232-F and provides the electrical interface between an asynchronous communication controller and the serial-port connector. This combination of drivers and receivers matches that needed for the typical serial port used in an IBM PC/AT, or compatible. The charge pump and four small external capacitors allow operation from a single 3-V to 5.5-V supply. In addition, the device includes an always-active noninverting output (ROUT2B), which allows applications using the ring indicator to transmit data while the device is powered down. The device operates at data signaling rates up to 250 kbit/s and a maximum of 30-V/μs driver output slew rate.

Please be aware that an important notice concerning availability, standard warranty, and use in critical applications of Texas Instruments semiconductor products and disclaimers thereto appears at the end of this data sheet.

AT, IBM, and PC are trademarks of International Business Machines Corporation.

PRODUCTION DATA information is current as of publication date. Products conform to specifications per the terms of Texas Instruments standard warranty. Production processing does not necessarily include testing of all parameters.

Copyright © 2004, Texas Instruments Incorporated

description/ordering information (continued)

Flexible control options for power management are available when the serial port is inactive. The auto-powerdown feature functions when FORCEON is low and $\overline{\text{FORCEOFF}}$ is high. During this mode of operation, if the device does not sense a valid RS-232 signal, the driver outputs are disabled. If $\overline{\text{FORCEOFF}}$ is set low, both drivers and receivers (except ROUT2B) are shut off, and the supply current is reduced to 1 μA. Disconnecting the serial port or turning off the peripheral drivers causes the auto-powerdown condition to occur.

Auto-powerdown can be disabled when FORCEON and $\overline{\text{FORCEOFF}}$ are high and should be done when driving a serial mouse. With auto-powerdown enabled, the device is activated automatically when a valid signal is applied to any receiver input. The $\overline{\text{INVALID}}$ output is used to notify the user if an RS-232 signal is present at any receiver input. $\overline{\text{INVALID}}$ is high (valid data) if any receiver input voltage is greater than 2.7 V or less than −2.7 V or has been between −0.3 V and 0.3 V for less than 30 μs. $\overline{\text{INVALID}}$ is low (invalid data) if all receiver input voltages are between −0.3 V and 0.3 V for more than 30 μs. Refer to Figure 5 for receiver input levels.

ORDERING INFORMATION

T_A	PACKAGE†		ORDERABLE PART NUMBER	TOP-SIDE MARKING
0°C to 70°C	SOIC (DW)	Tube of 20	MAX3243CDW	MAX3243C
		Reel of 1000	MAX3243CDWR	
	SSOP (DB)	Tube of 50	MAX3243CDB	MAX3243C
		Reel of 2000	MAX3243CDBR	
	TSSOP (PW)	Tube of 50	MAX3243CPW	MA3243C
		Reel of 2000	MAX3243CPWR	
−40°C to 85°C	SOIC (DW)	Tube of 20	MAX3243IDW	MAX3243I
		Reel of 1000	MAX3243IDWR	
	SSOP (DB)	Tube of 50	MAX3243IDB	MAX3243I
		Reel of 2000	MAX3243IDBR	
	TSSOP (PW)	Tube of 50	MAX3243IPW	MB3243I
		Reel of 2000	MAX3243IPWR	

† Package drawings, standard packing quantities, thermal data, symbolization, and PCB design guidelines are available at www.ti.com/sc/package.

Function Tables

EACH DRIVER

INPUTS				OUTPUT DOUT	DRIVER STATUS
DIN	FORCEON	$\overline{\text{FORCEOFF}}$	VALID RIN RS-232 LEVEL		
X	X	L	X	Z	Powered off
L	H	H	X	H	Normal operation with auto-powerdown disabled
H	H	H	X	L	
L	L	H	Yes	H	Normal operation with auto-powerdown enabled
H	L	H	Yes	L	
L	L	H	No	Z	Powered off by auto-powerdown feature
H	L	H	No	Z	

H = high level, L = low level, X = irrelevant, Z = high impedance

EACH RECEIVER

INPUTS				OUTPUTS		RECEIVER STATUS
RIN2	RIN1, RIN3−RIN5	$\overline{\text{FORCEOFF}}$	VALID RIN RS-232 LEVEL	ROUT2B	ROUT	
L	X	L	X	L	Z	Powered off while ROUT2B is active
H	X	L	X	H	Z	
L	L	H	Yes	L	H	Normal operation with auto-powerdown disabled/enabled
L	H	H	Yes	L	L	
H	L	H	Yes	H	H	
H	H	H	Yes	H	L	
Open	Open	H	No	L	H	

H = high level, L = low level, X = irrelevant, Z = high impedance (off), Open = input disconnected or connected driver off

logic diagram (positive logic)

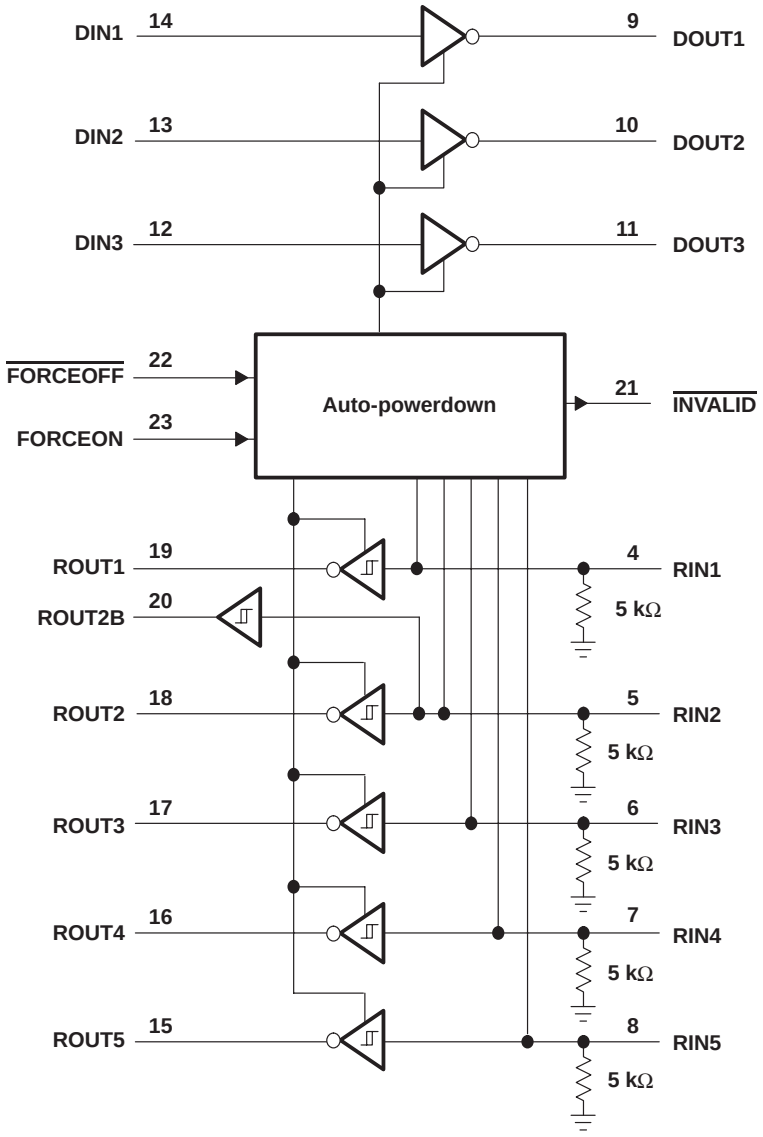

absolute maximum ratings over operating free-air temperature range (unless otherwise noted)†

Supply voltage range, V_{CC} (see Note 1) . . . . . −0.3 V to 6 V
Positive output supply voltage range, V+ (see Note 1) . . . . . −0.3 V to 7 V
Negative output supply voltage range, V− (see Note 1) . . . . . 0.3 V to −7 V
Supply voltage difference, V+ − V− (see Note 1) . . . . . 13 V
Input voltage range, V_I: Driver ($\overline{\text{FORCEOFF}}$, FORCEON) . . . . . −0.3 V to 6 V
Receiver . . . . . −25 V to 25 V
Output voltage range, V_O: Driver . . . . . −13.2 V to 13.2 V
Receiver ($\overline{\text{INVALID}}$) . . . . . −0.3 V to V_{CC} + 0.3 V
Package thermal impedance, θ_{JA} (see Notes 2 and 3): DB package . . . . . 62°C/W
DW package . . . . . 46°C/W
PW package . . . . . 62°C/W
Operating virtual junction temperature, T_J . . . . . 150°C
Storage temperature range, T_{stg} . . . . . −65°C to 150°C

† Stresses beyond those listed under “absolute maximum ratings” may cause permanent damage to the device. These are stress ratings only, and functional operation of the device at these or any other conditions beyond those indicated under “recommended operating conditions” is not implied. Exposure to absolute-maximum-rated conditions for extended periods may affect device reliability.

NOTES: 1. All voltages are with respect to network GND.
2. Maximum power dissipation is a function of $T_J(max)$, θ_{JA}, and T_A. The maximum allowable power dissipation at any allowable ambient temperature is $P_D = (T_J(max) - T_A)/\theta_{JA}$. Operating at the absolute maximum T_J of 150°C can affect reliability.
3. The package thermal impedance is calculated in accordance with JESD 51-7.

recommended operating conditions (see Note 4 and Figure 6)

				MIN	NOM	MAX	UNIT
	Supply voltage		V_{CC} = 3.3 V	3	3.3	3.6	V
			V_{CC} = 5 V	4.5	5	5.5	
V_{IH}	Driver and control high-level input voltage	DIN, $\overline{\text{FORCEOFF}}$, FORCEON	V_{CC} = 3.3 V	2			V
			V_{CC} = 5 V	2.4			
V_{IL}	Driver and control low-level input voltage	DIN, $\overline{\text{FORCEOFF}}$, FORCEON				0.8	V
V_I	Driver and control input voltage	DIN, $\overline{\text{FORCEOFF}}$, FORCEON		0		5.5	V
V_I	Receiver input voltage			−25		25	V
T_A	Operating free-air temperature		MAX3243C	0		70	°C
			MAX3243I	−40		85	

NOTE 4: Test conditions are C1−C4 = 0.1 µF at V_{CC} = 3.3 V ± 0.3 V; C1 = 0.047 µF, C2−C4 = 0.33 µF at V_{CC} = 5 V ± 0.5 V.

electrical characteristics over recommended ranges of supply voltage and operating free-air temperature (unless otherwise noted) (see Note 4 and Figure 6)

PARAMETER			TEST CONDITIONS		MIN	TYP‡	MAX	UNIT
I_I	Input leakage current	$\overline{\text{FORCEOFF}}$, FORCEON				±0.01	±1	µA
I_{CC}	Supply current	Auto-powerdown disabled	V_{CC} = 3.3 V or 5 V, T_A = 25°C	No load, $\overline{\text{FORCEOFF}}$ and FORCEON at V_{CC}		0.3	1	mA
		Powered off		No load, $\overline{\text{FORCEOFF}}$ at GND		1	10	µA
		Auto-powerdown enabled		No load, $\overline{\text{FORCEOFF}}$ at V_{CC}, FORCEON at GND, All RIN are open or grounded, All DIN are grounded		1	10	

‡ All typical values are at V_{CC} = 3.3 V or V_{CC} = 5 V, and T_A = 25°C.

NOTE 4: Test conditions are C1−C4 = 0.1 µF at V_{CC} = 3.3 V ± 0.3 V; C1 = 0.047 µF, C2−C4 = 0.33 µF at V_{CC} = 5 V ± 0.5 V.

DRIVER SECTION

electrical characteristics over recommended ranges of supply voltage and operating free-air temperature (unless otherwise noted) (see Note 4 and Figure 6)

PARAMETER		TEST CONDITIONS			MIN	TYP†	MAX	UNIT
V_{OH}	High-level output voltage	All DOUT at R_L = 3 kΩ to GND			5	5.4		V
V_{OL}	Low-level output voltage	All DOUT at R_L = 3 kΩ to GND			−5	−5.4		V
V_O	Output voltage (mouse driveability)	DIN1 = DIN2 = GND, DIN3 = V_{CC}, 3-kΩ to GND at DOUT3, DOUT1 = DOUT2 = 2.5 mA			±5			V
I_{IH}	High-level input current	$V_I = V_{CC}$				±0.01	±1	µA
I_{IL}	Low-level input current	V_I at GND				±0.01	±1	µA
I_{OS}	Short-circuit output current‡	V_{CC} = 3.6 V,	V_O = 0 V			±35	±60	mA
		V_{CC} = 5.5 V,	V_O = 0 V					
r_o	Output resistance	V_{CC}, V+, and V− = 0 V,	V_O = ±2 V		300	10M		Ω
I_{off}	Output leakage current	$\overline{\text{FORCEOFF}}$ = GND	V_O = ±12 V,	V_{CC} = 3 V to 3.6 V			±25	µA
			V_O = ±10 V,	V_{CC} = 4.5 V to 5.5 V			±25	

† All typical values are at V_{CC} = 3.3 V or V_{CC} = 5 V, and T_A = 25°C.
‡ Short-circuit durations should be controlled to prevent exceeding the device absolute power dissipation ratings, and not more than one output should be shorted at a time.
NOTE 4: Test conditions are C1−C4 = 0.1 µF at V_{CC} = 3.3 V ± 0.3 V; C1 = 0.047 µF, C2−C4 = 0.33 µF at V_{CC} = 5 V ± 0.5 V.

switching characteristics over recommended ranges of supply voltage and operating free-air temperature (unless otherwise noted) (see Note 4 and Figure 6)

PARAMETER		TEST CONDITIONS		MIN	TYP†	MAX	UNIT
	Maximum data rate	C_L = 1000 pF, One DOUT switching,	R_L = 3 kΩ, See Figure 1	150	250		kbit/s
$t_{sk(p)}$	Pulse skew§	C_L = 150 pF to 2500 pF	R_L = 3 kΩ to 7 kΩ, See Figure 2		100		ns
SR(tr)	Slew rate, transition region (see Figure 1)	V_{CC} = 3.3 V, R_L = 3 kΩ to 7 kΩ	C_L = 150 pF to 1000 pF	6		30	V/µs
			C_L = 150 pF to 2500 pF	4		30	

† All typical values are at V_{CC} = 3.3 V or V_{CC} = 5 V, and T_A = 25°C.
§ Pulse skew is defined as $|t_{PLH} - t_{PHL}|$ of each channel of the same device.
NOTE 4: Test conditions are C1−C4 = 0.1 µF at V_{CC} = 3.3 V ± 0.3 V; C1 = 0.047 µF, C2−C4 = 0.33 µF at V_{CC} = 5 V ± 0.5 V.

RECEIVER SECTION

electrical characteristics over recommended ranges of supply voltage and operating free-air temperature (unless otherwise noted) (see Note 4 and Figure 6)

PARAMETER		TEST CONDITIONS	MIN	TYP†	MAX	UNIT
V_{OH}	High-level output voltage	I_{OH} = −1 mA	V_{CC}−0.6 V	V_{CC}−0.1 V		V
V_{OL}	Low-level output voltage	I_{OL} = 1.6 mA			0.4	V
V_{IT+}	Positive-going input threshold voltage	V_{CC} = 3.3 V		1.6	2.4	V
		V_{CC} = 5 V		1.9	2.4	
$V_{IT−}$	Negative-going input threshold voltage	V_{CC} = 3.3 V	0.6	1.1		V
		V_{CC} = 5 V	0.8	1.4		
V_{hys}	Input hysteresis ($V_{IT+} − V_{IT−}$)			0.5		V
I_{off}	Output leakage current (except ROUT2B)	$\overline{\text{FORCEOFF}}$ = 0 V		±0.05	±10	µA
r_i	Input resistance	V_I = ±3 V to ±25 V	3	5	7	kΩ

† All typical values are at V_{CC} = 3.3 V or V_{CC} = 5 V, and T_A = 25°C.
NOTE 4: Test conditions are C1−C4 = 0.1 µF at V_{CC} = 3.3 V ± 0.3 V; C1 = 0.047 µF, C2−C4 = 0.33 µF at V_{CC} = 5 V ± 0.5 V.

switching characteristics over recommended ranges of supply voltage and operating free-air temperature (unless otherwise noted) (see Note 4)

PARAMETER		TEST CONDITIONS	MIN	TYP†	MAX	UNIT
t_{PLH}	Propagation delay time, low- to high-level output	C_L = 150 pF, See Figure 3		150		ns
t_{PHL}	Propagation delay time, high- to low-level output			150		ns
t_{en}	Output enable time	C_L = 150 pF, R_L = 3 kΩ, See Figure 4		200		ns
t_{dis}	Output disable time			200		ns
$t_{sk(p)}$	Pulse skew‡	See Figure 3		50		ns

† All typical values are at V_{CC} = 3.3 V or V_{CC} = 5 V, and T_A = 25°C.
‡ Pulse skew is defined as $|t_{PLH} − t_{PHL}|$ of each channel of the same device.
NOTE 4: Test conditions are C1−C4 = 0.1 µF at V_{CC} = 3.3 V ± 0.3 V; C1 = 0.047 µF, C2−C4 = 0.33 µF at V_{CC} = 5 V ± 0.5 V.

AUTO-POWERDOWN SECTION

electrical characteristics over recommended ranges of supply voltage and operating free-air temperature (unless otherwise noted) (see Figure 5)

PARAMETER		TEST CONDITIONS	MIN	TYP†	MAX	UNIT
$V_{T+(valid)}$	Receiver input threshold for $\overline{\text{INVALID}}$ high-level output voltage	$\overline{\text{FORCEON}}$ = GND, $\overline{\text{FORCEOFF}}$ = V_{CC}			2.7	V
$V_{T-(valid)}$	Receiver input threshold for $\overline{\text{INVALID}}$ high-level output voltage	$\overline{\text{FORCEON}}$ = GND, $\overline{\text{FORCEOFF}}$ = V_{CC}	−2.7			V
$V_{T(invalid)}$	Receiver input threshold for $\overline{\text{INVALID}}$ low-level output voltage	$\overline{\text{FORCEON}}$ = GND, $\overline{\text{FORCEOFF}}$ = V_{CC}	−0.3		0.3	V
V_{OH}	$\overline{\text{INVALID}}$ high-level output voltage	I_{OH} = −1 mA, FORCEON = GND, $\overline{\text{FORCEOFF}}$ = V_{CC}	V_{CC}−0.6			V
V_{OL}	$\overline{\text{INVALID}}$ low-level output voltage	I_{OL} = 1.6 mA, FORCEON = GND, $\overline{\text{FORCEOFF}}$ = V_{CC}			0.4	V

† All typical values are at V_{CC} = 3.3 V or V_{CC} = 5 V, and T_A = 25°C.

switching characteristics over recommended ranges of supply voltage and operating free-air temperature (unless otherwise noted) (see Figure 5)

PARAMETER		MIN	TYP†	MAX	UNIT
t_{valid}	Propagation delay time, low- to high-level output		1		µs
$t_{invalid}$	Propagation delay time, high- to low-level output		30		µs
t_{en}	Supply enable time		100		µs

† All typical values are at V_{CC} = 3.3 V or V_{CC} = 5 V, and T_A = 25°C.

PARAMETER MEASUREMENT INFORMATION

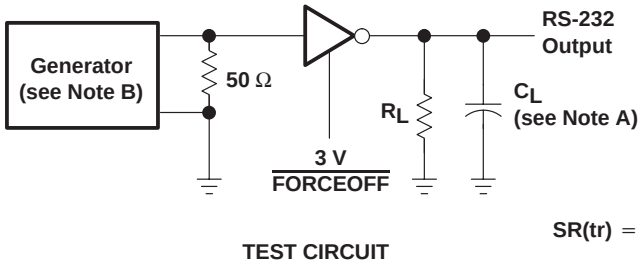

TEST CIRCUIT

$$SR(tr) = \frac{6\ V}{t_{THL}\ \text{or}\ t_{TLH}}$$

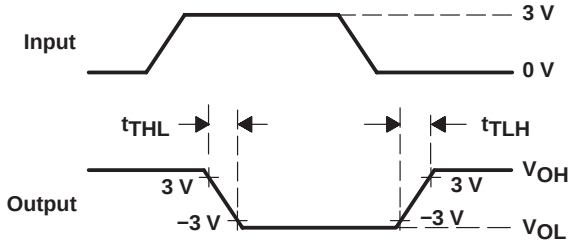

VOLTAGE WAVEFORMS

NOTES: A. C_L includes probe and jig capacitance.
B. The pulse generator has the following characteristics: PRR = 250 kbit/s, Z_O = 50 Ω, 50% duty cycle, $t_r \le 10$ ns, $t_f \le 10$ ns.

Figure 1. Driver Slew Rate

PARAMETER MEASUREMENT INFORMATION

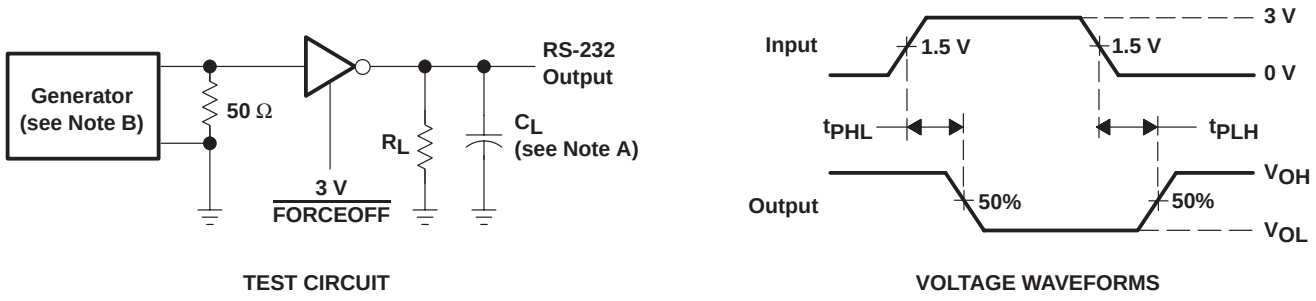

TEST CIRCUIT VOLTAGE WAVEFORMS

NOTES: A. C_L includes probe and jig capacitance.
B. The pulse generator has the following characteristics: PRR = 250 kbit/s, Z_O = 50 Ω, 50% duty cycle, $t_r \le 10$ ns, $t_f \le 10$ ns.

Figure 2. Driver Pulse Skew

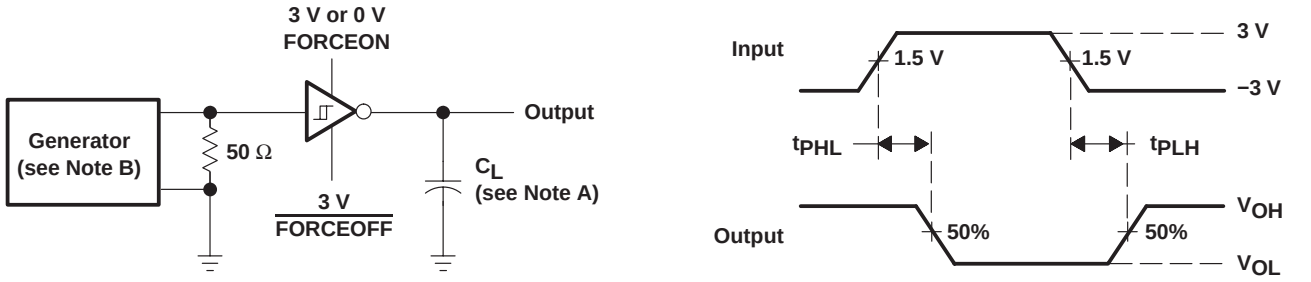

TEST CIRCUIT VOLTAGE WAVEFORMS

NOTES: A. C_L includes probe and jig capacitance.
B. The pulse generator has the following characteristics: Z_O = 50 Ω, 50% duty cycle, $t_r \le 10$ ns, $t_f \le 10$ ns.

Figure 3. Receiver Propagation Delay Times

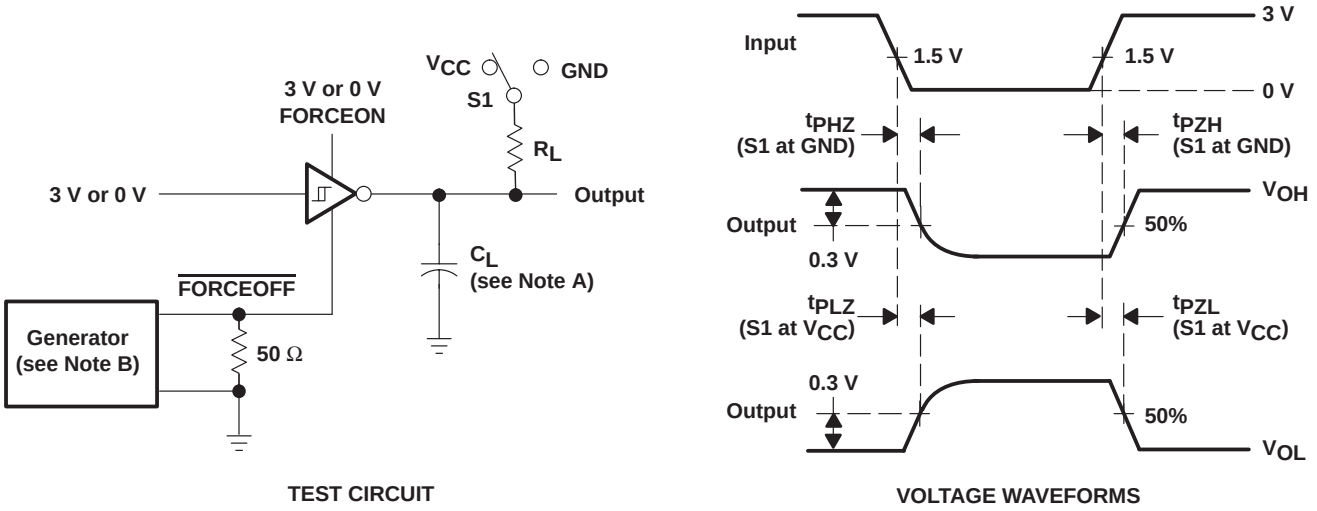

TEST CIRCUIT VOLTAGE WAVEFORMS

NOTES: A. C_L includes probe and jig capacitance.
B. The pulse generator has the following characteristics: Z_O = 50 Ω, 50% duty cycle, $t_r \le 10$ ns, $t_f \le 10$ ns.
C. t_{PLZ} and t_{PHZ} are the same as t_{dis}.
D. t_{PZL} and t_{PZH} are the same as t_{en}.

Figure 4. Receiver Enable and Disable Times

PARAMETER MEASUREMENT INFORMATION

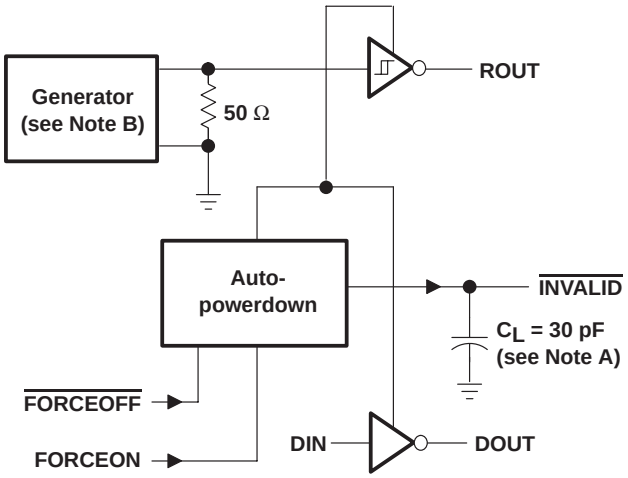

TEST CIRCUIT

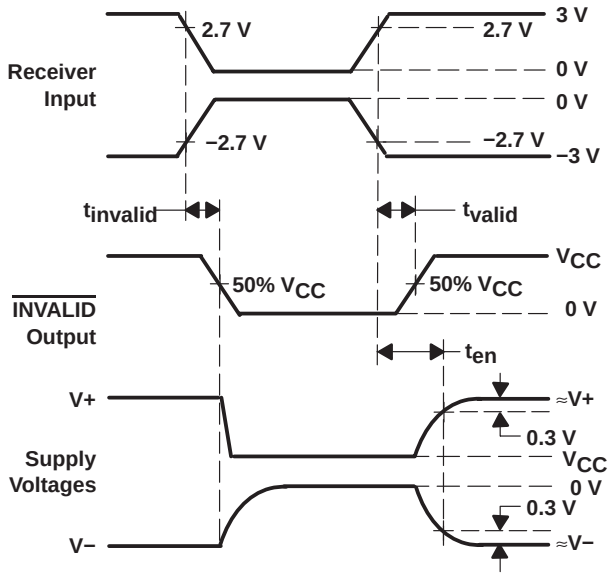

VOLTAGE WAVEFORMS

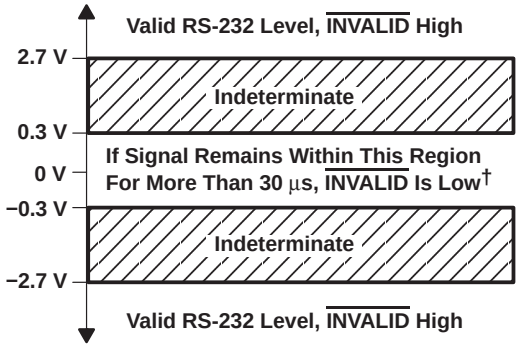

† Auto-powerdown disables drivers and reduces supply current to 1 μA.

NOTES: A. C_L includes probe and jig capacitance.
B. The pulse generator has the following characteristics: PRR = 5 kbit/s, Z_O = 50 Ω, 50% duty cycle, $t_r \le 10$ ns, $t_f \le 10$ ns.

Figure 5. INVALID Propagation Delay Times and Supply Enabling Time

APPLICATION INFORMATION

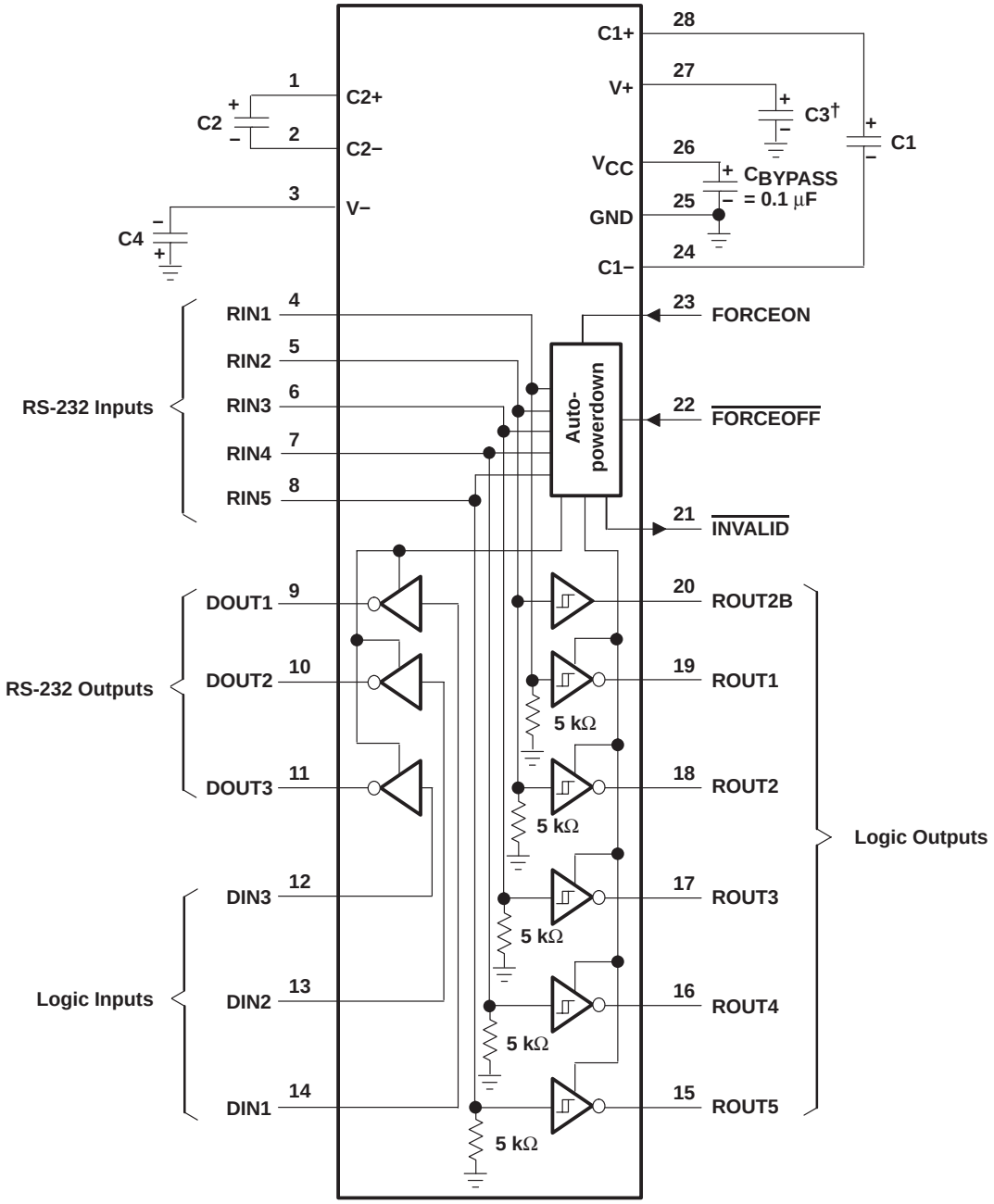

† C3 can be connected to V_{CC} or GND.

NOTES: A. Resistor values shown are nominal.

B. Nonpolarized ceramic capacitors are acceptable. If polarized tantalum or electrolytic capacitors are used, they should be connected as shown.

V_{CC} vs CAPACITOR VALUES

V_{CC}	C1	C2, C3, and C4
3.3 V ± 0.3 V	0.1 μF	0.1 μF
5 V ± 0.5 V	0.047 μF	0.33 μF
3 V to 5.5 V	0.1 μF	0.47 μF

Figure 6. Typical Operating Circuit and Capacitor Values

PACKAGING INFORMATION

Orderable Device	Status (1)	Package Type	Package Drawing	Pins	Package Qty	Eco Plan (2)	Lead/ Ball Finish	MSL Peak Temp (3)	Samples (Requires Login)
MAX3243CDB	ACTIVE	SSOP	DB	28	50	Green (RoHS & no Sb/Br)	CU NIPDAU	Level-1-260C-UNLIM	
MAX3243CDBE4	ACTIVE	SSOP	DB	28	50	Green (RoHS & no Sb/Br)	CU NIPDAU	Level-1-260C-UNLIM	
MAX3243CDBG4	ACTIVE	SSOP	DB	28	50	Green (RoHS & no Sb/Br)	CU NIPDAU	Level-1-260C-UNLIM	
MAX3243CDBR	ACTIVE	SSOP	DB	28	2000	Green (RoHS & no Sb/Br)	CU NIPDAU	Level-1-260C-UNLIM	
MAX3243CDBRE4	ACTIVE	SSOP	DB	28	2000	Green (RoHS & no Sb/Br)	CU NIPDAU	Level-1-260C-UNLIM	
MAX3243CDBRG4	ACTIVE	SSOP	DB	28	2000	Green (RoHS & no Sb/Br)	CU NIPDAU	Level-1-260C-UNLIM	
MAX3243CDW	ACTIVE	SOIC	DW	28	20	Green (RoHS & no Sb/Br)	CU NIPDAU	Level-1-260C-UNLIM	
MAX3243CDWE4	ACTIVE	SOIC	DW	28	20	Green (RoHS & no Sb/Br)	CU NIPDAU	Level-1-260C-UNLIM	
MAX3243CDWG4	ACTIVE	SOIC	DW	28	20	Green (RoHS & no Sb/Br)	CU NIPDAU	Level-1-260C-UNLIM	
MAX3243CDWR	ACTIVE	SOIC	DW	28	1000	Green (RoHS & no Sb/Br)	CU NIPDAU	Level-1-260C-UNLIM	
MAX3243CDWRG4	ACTIVE	SOIC	DW	28	1000	Green (RoHS & no Sb/Br)	CU NIPDAU	Level-1-260C-UNLIM	
MAX3243CPW	ACTIVE	TSSOP	PW	28	50	Green (RoHS & no Sb/Br)	CU NIPDAU	Level-1-260C-UNLIM	
MAX3243CPWE4	ACTIVE	TSSOP	PW	28	50	Green (RoHS & no Sb/Br)	CU NIPDAU	Level-1-260C-UNLIM	
MAX3243CPWG4	ACTIVE	TSSOP	PW	28	50	Green (RoHS & no Sb/Br)	CU NIPDAU	Level-1-260C-UNLIM	
MAX3243CPWR	ACTIVE	TSSOP	PW	28	2000	Green (RoHS & no Sb/Br)	CU NIPDAU	Level-1-260C-UNLIM	
MAX3243CPWRE4	ACTIVE	TSSOP	PW	28	2000	Green (RoHS & no Sb/Br)	CU NIPDAU	Level-1-260C-UNLIM	
MAX3243CPWRG4	ACTIVE	TSSOP	PW	28	2000	Green (RoHS & no Sb/Br)	CU NIPDAU	Level-1-260C-UNLIM	

Orderable Device	Status (1)	Package Type	Package Drawing	Pins	Package Qty	Eco Plan (2)	Lead/ Ball Finish	MSL Peak Temp (3)	Samples (Requires Login)
MAX3243IDB	ACTIVE	SSOP	DB	28	50	Green (RoHS & no Sb/Br)	CU NIPDAU	Level-1-260C-UNLIM	
MAX3243IDBE4	ACTIVE	SSOP	DB	28	50	Green (RoHS & no Sb/Br)	CU NIPDAU	Level-1-260C-UNLIM	
MAX3243IDBG4	ACTIVE	SSOP	DB	28	50	Green (RoHS & no Sb/Br)	CU NIPDAU	Level-1-260C-UNLIM	
MAX3243IDBR	ACTIVE	SSOP	DB	28	2000	Green (RoHS & no Sb/Br)	CU NIPDAU	Level-1-260C-UNLIM	
MAX3243IDBRE4	ACTIVE	SSOP	DB	28	2000	Green (RoHS & no Sb/Br)	CU NIPDAU	Level-1-260C-UNLIM	
MAX3243IDBRG4	ACTIVE	SSOP	DB	28	2000	Green (RoHS & no Sb/Br)	CU NIPDAU	Level-1-260C-UNLIM	
MAX3243IDW	ACTIVE	SOIC	DW	28	20	Green (RoHS & no Sb/Br)	CU NIPDAU	Level-1-260C-UNLIM	
MAX3243IDWG4	ACTIVE	SOIC	DW	28	20	Green (RoHS & no Sb/Br)	CU NIPDAU	Level-1-260C-UNLIM	
MAX3243IDWR	ACTIVE	SOIC	DW	28	1000	Green (RoHS & no Sb/Br)	CU NIPDAU	Level-1-260C-UNLIM	
MAX3243IDWRE4	ACTIVE	SOIC	DW	28	1000	Green (RoHS & no Sb/Br)	CU NIPDAU	Level-1-260C-UNLIM	
MAX3243IDWRG4	ACTIVE	SOIC	DW	28	1000	Green (RoHS & no Sb/Br)	CU NIPDAU	Level-1-260C-UNLIM	
MAX3243IPW	ACTIVE	TSSOP	PW	28	50	Green (RoHS & no Sb/Br)	CU NIPDAU	Level-1-260C-UNLIM	
MAX3243IPWG4	ACTIVE	TSSOP	PW	28	50	Green (RoHS & no Sb/Br)	CU NIPDAU	Level-1-260C-UNLIM	
MAX3243IPWR	ACTIVE	TSSOP	PW	28	2000	Green (RoHS & no Sb/Br)	CU NIPDAU	Level-1-260C-UNLIM	
MAX3243IPWRE4	ACTIVE	TSSOP	PW	28	2000	Green (RoHS & no Sb/Br)	CU NIPDAU	Level-1-260C-UNLIM	
MAX3243IPWRG4	ACTIVE	TSSOP	PW	28	2000	Green (RoHS & no Sb/Br)	CU NIPDAU	Level-1-260C-UNLIM	

(1) The marketing status values are defined as follows:
ACTIVE: Product device recommended for new designs.
LIFEBUY: TI has announced that the device will be discontinued, and a lifetime-buy period is in effect.
NRND: Not recommended for new designs. Device is in production to support existing customers, but TI does not recommend using this part in a new design.

PREVIEW: Device has been announced but is not in production. Samples may or may not be available.
OBSOLETE: TI has discontinued the production of the device.

(2) Eco Plan - The planned eco-friendly classification: Pb-Free (RoHS), Pb-Free (RoHS Exempt), or Green (RoHS & no Sb/Br) - please check http://www.ti.com/productcontent for the latest availability information and additional product content details.
TBD: The Pb-Free/Green conversion plan has not been defined.
Pb-Free (RoHS): TI's terms "Lead-Free" or "Pb-Free" mean semiconductor products that are compatible with the current RoHS requirements for all 6 substances, including the requirement that lead not exceed 0.1% by weight in homogeneous materials. Where designed to be soldered at high temperatures, TI Pb-Free products are suitable for use in specified lead-free processes.
Pb-Free (RoHS Exempt): This component has a RoHS exemption for either 1) lead-based flip-chip solder bumps used between the die and package, or 2) lead-based die adhesive used between the die and leadframe. The component is otherwise considered Pb-Free (RoHS compatible) as defined above.
Green (RoHS & no Sb/Br): TI defines "Green" to mean Pb-Free (RoHS compatible), and free of Bromine (Br) and Antimony (Sb) based flame retardants (Br or Sb do not exceed 0.1% by weight in homogeneous material)

(3) MSL, Peak Temp. -- The Moisture Sensitivity Level rating according to the JEDEC industry standard classifications, and peak solder temperature.

Important Information and Disclaimer: The information provided on this page represents TI's knowledge and belief as of the date that it is provided. TI bases its knowledge and belief on information provided by third parties, and makes no representation or warranty as to the accuracy of such information. Efforts are underway to better integrate information from third parties. TI has taken and continues to take reasonable steps to provide representative and accurate information but may not have conducted destructive testing or chemical analysis on incoming materials and chemicals. TI and TI suppliers consider certain information to be proprietary, and thus CAS numbers and other limited information may not be available for release.

In no event shall TI's liability arising out of such information exceed the total purchase price of the TI part(s) at issue in this document sold by TI to Customer on an annual basis.

OTHER QUALIFIED VERSIONS OF MAX3243 :

- Enhanced Product: MAX3243-EP

NOTE: Qualified Version Definitions:

- Enhanced Product - Supports Defense, Aerospace and Medical Applications

TAPE AND REEL INFORMATION

REEL DIMENSIONS

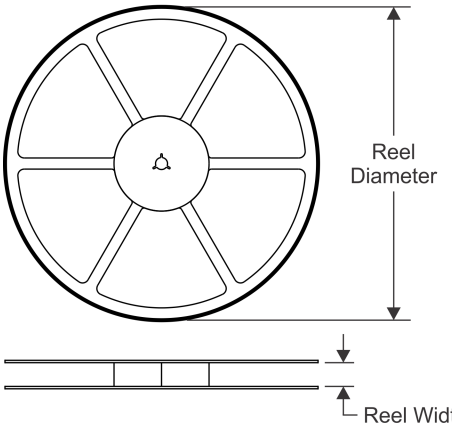

TAPE DIMENSIONS

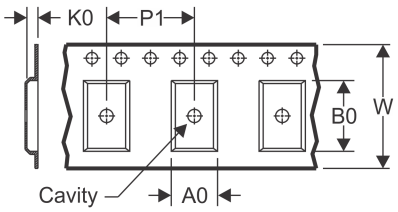

A0	Dimension designed to accommodate the component width
B0	Dimension designed to accommodate the component length
K0	Dimension designed to accommodate the component thickness
W	Overall width of the carrier tape
P1	Pitch between successive cavity centers

QUADRANT ASSIGNMENTS FOR PIN 1 ORIENTATION IN TAPE

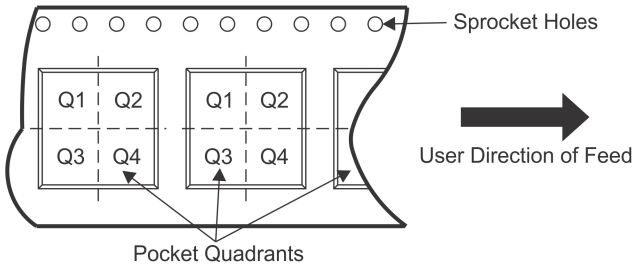

*All dimensions are nominal

Device	Package Type	Package Drawing	Pins	SPQ	Reel Diameter (mm)	Reel Width W1 (mm)	A0 (mm)	B0 (mm)	K0 (mm)	P1 (mm)	W (mm)	Pin1 Quadrant
MAX3243CDBR	SSOP	DB	28	2000	330.0	16.4	8.2	10.5	2.5	12.0	16.0	Q1
MAX3243CDWR	SOIC	DW	28	1000	330.0	32.4	11.35	18.67	3.1	16.0	32.0	Q1
MAX3243CPWR	TSSOP	PW	28	2000	330.0	16.4	7.1	10.4	1.6	12.0	16.0	Q1
MAX3243IDBR	SSOP	DB	28	2000	330.0	16.4	8.2	10.5	2.5	12.0	16.0	Q1
MAX3243IDWR	SOIC	DW	28	1000	330.0	32.4	11.35	18.67	3.1	16.0	32.0	Q1
MAX3243IDWR	SOIC	DW	28	1000	330.0	32.4	11.35	18.67	3.1	16.0	32.0	Q1
MAX3243IDWRG4	SOIC	DW	28	1000	330.0	32.4	11.35	18.67	3.1	16.0	32.0	Q1
MAX3243IPWR	TSSOP	PW	28	2000	330.0	16.4	7.1	10.4	1.6	12.0	16.0	Q1

TAPE AND REEL BOX DIMENSIONS

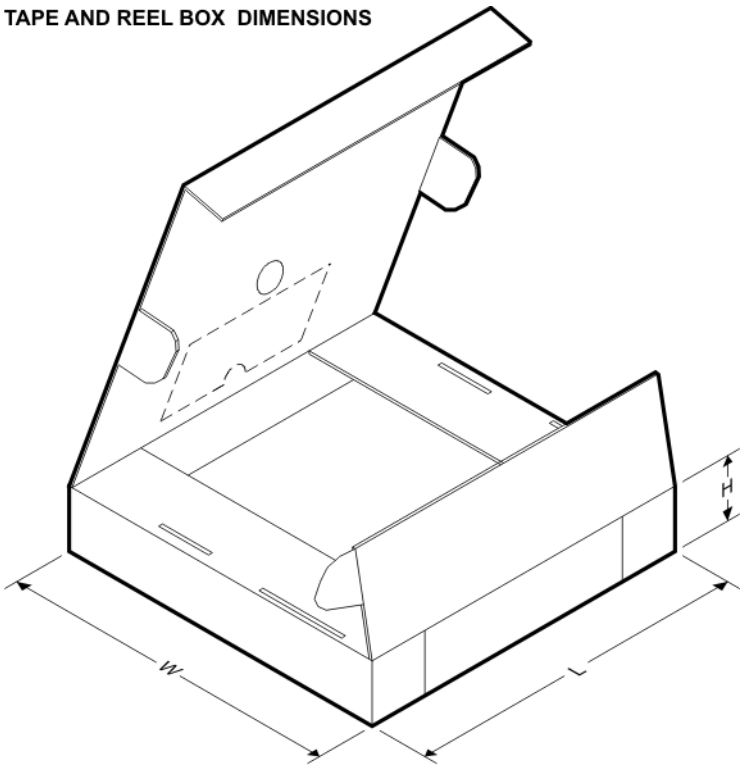

*All dimensions are nominal

Device	Package Type	Package Drawing	Pins	SPQ	Length (mm)	Width (mm)	Height (mm)
MAX3243CDBR	SSOP	DB	28	2000	367.0	367.0	38.0
MAX3243CDWR	SOIC	DW	28	1000	367.0	367.0	55.0
MAX3243CPWR	TSSOP	PW	28	2000	367.0	367.0	38.0
MAX3243IDBR	SSOP	DB	28	2000	367.0	367.0	38.0
MAX3243IDWR	SOIC	DW	28	1000	366.0	364.0	50.0
MAX3243IDWR	SOIC	DW	28	1000	367.0	367.0	55.0
MAX3243IDWRG4	SOIC	DW	28	1000	367.0	367.0	55.0
MAX3243IPWR	TSSOP	PW	28	2000	367.0	367.0	38.0

DW (R–PDSO–G28) PLASTIC SMALL OUTLINE

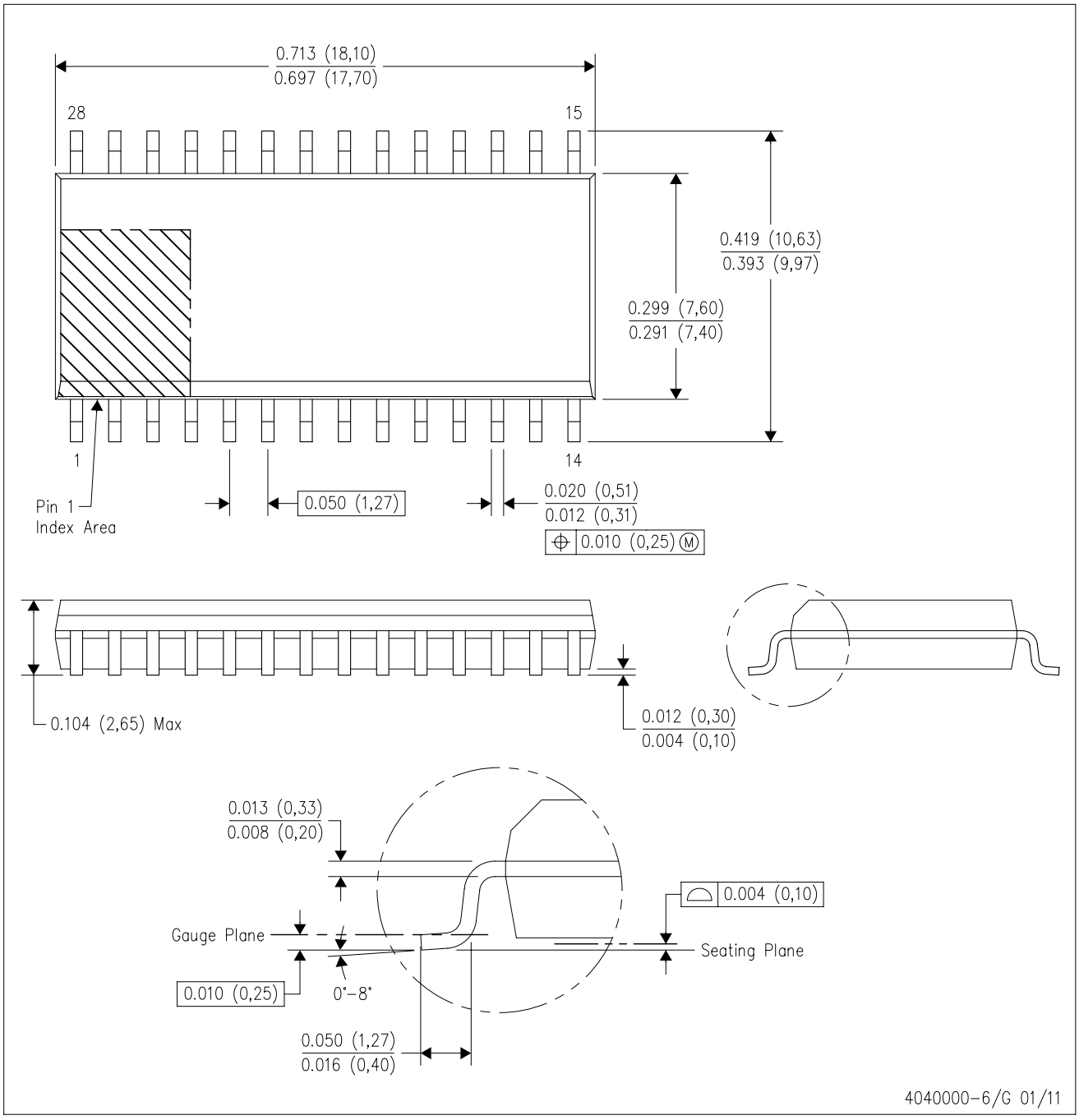

NOTES:
A. All linear dimensions are in inches (millimeters). Dimensioning and tolerancing per ASME Y14.5M–1994.
B. This drawing is subject to change without notice.
C. Body dimensions do not include mold flash or protrusion not to exceed 0.006 (0,15).
D. Falls within JEDEC MS–013 variation AE.

DW (R–PDSO–G28) PLASTIC SMALL OUTLINE

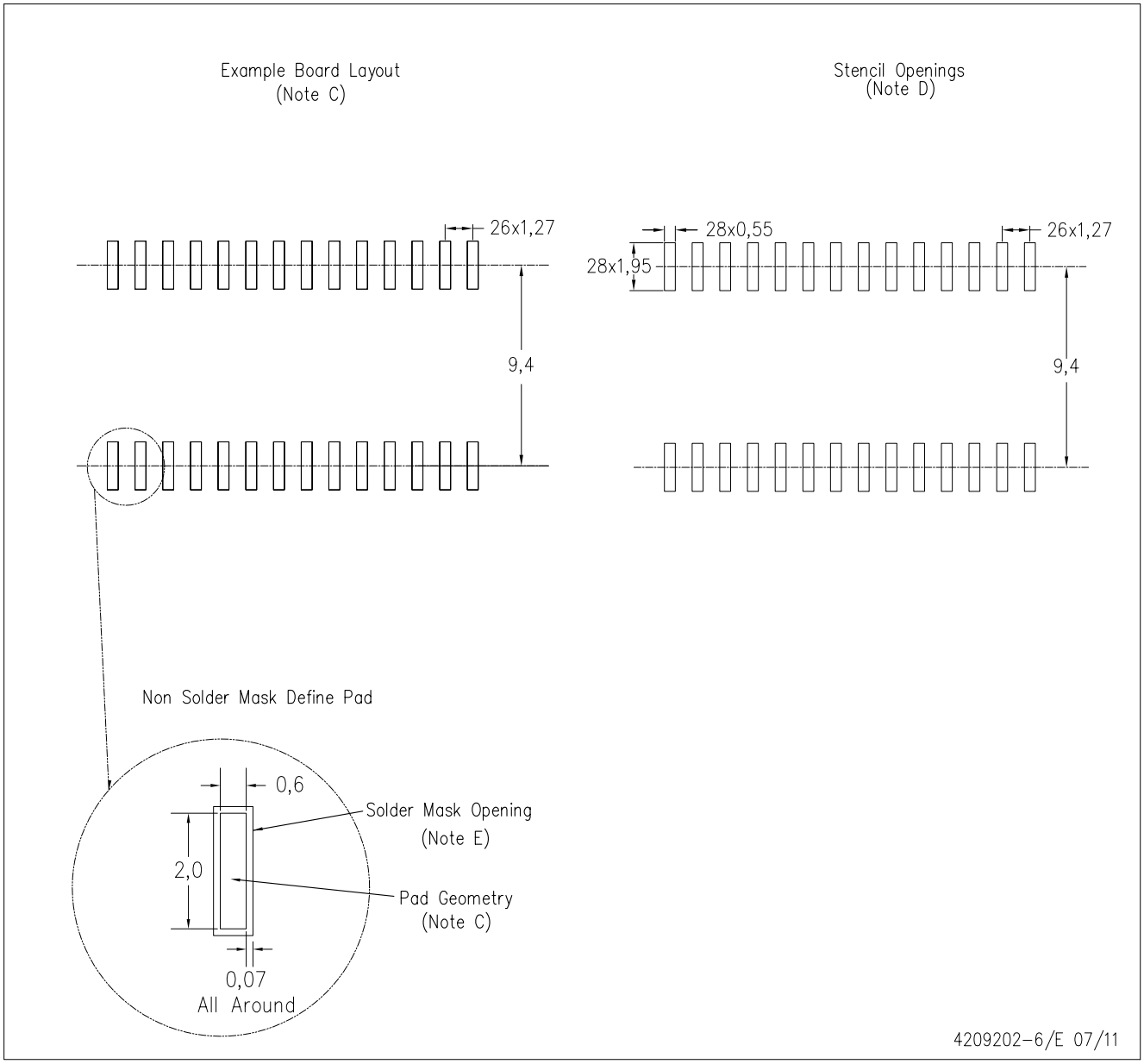

NOTES:
A. All linear dimensions are in millimeters.
B. This drawing is subject to change without notice.
C. Refer to IPC7351 for alternate board design.
D. Laser cutting apertures with trapezoidal walls and also rounding corners will offer better paste release. Customers should contact their board assembly site for stencil design recommendations. Refer to IPC–7525
E. Customers should contact their board fabrication site for solder mask tolerances between and around signal pads.

PW (R–PDSO–G28) PLASTIC SMALL OUTLINE

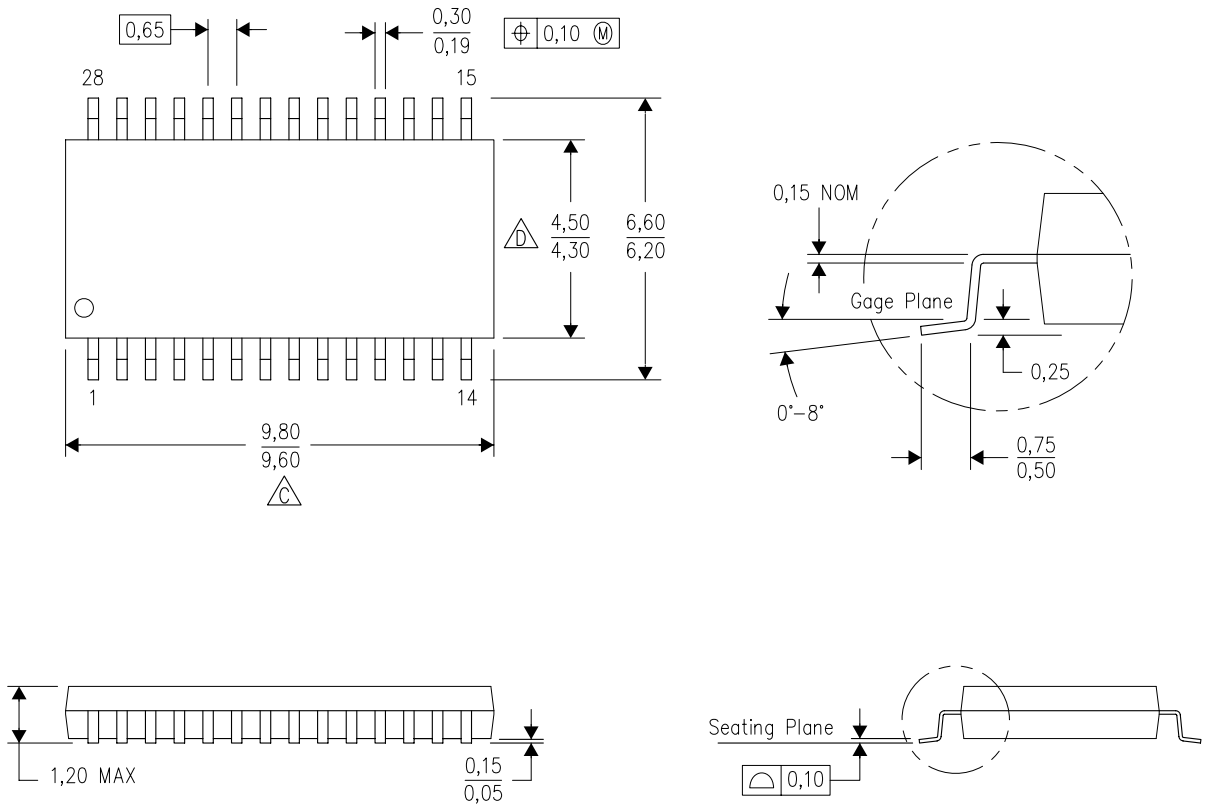

4040064–7/G 02/11

NOTES:
A. All linear dimensions are in millimeters. Dimensioning and tolerancing per ASME Y14.5M–1994.
B. This drawing is subject to change without notice.
C. Body length does not include mold flash, protrusions, or gate burrs. Mold flash, protrusions, or gate burrs shall not exceed 0,15 each side.
D. Body width does not include interlead flash. Interlead flash shall not exceed 0,25 each side.
E. Falls within JEDEC MO–153

PW (R–PDSO–G28) PLASTIC SMALL OUTLINE

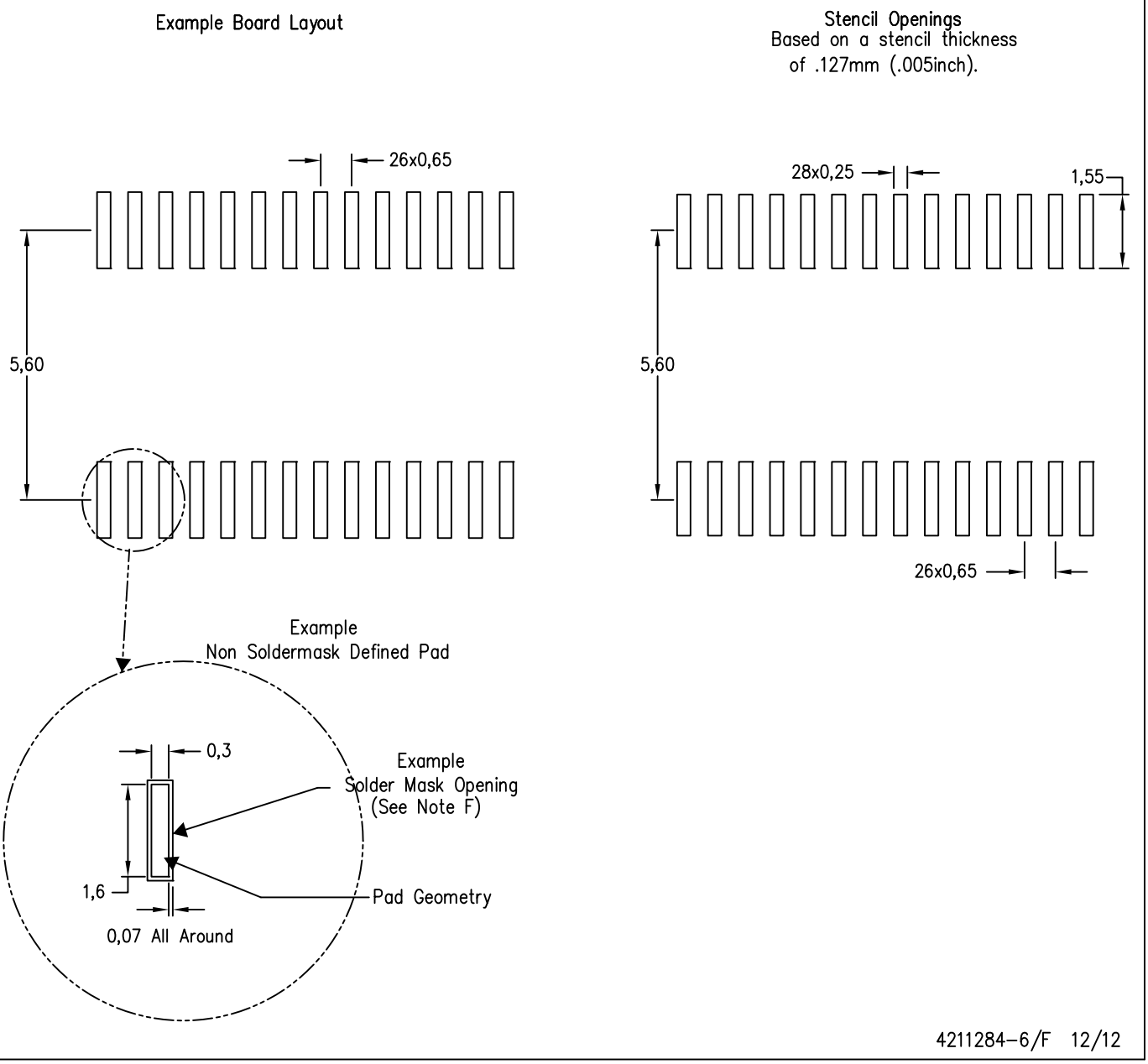

NOTES:
A. All linear dimensions are in millimeters.
B. This drawing is subject to change without notice.
C. Publication IPC–7351 is recommended for alternate design.
D. Laser cutting apertures with trapezoidal walls and also rounding corners will offer better paste release. Customers should contact their board assembly site for stencil design recommendations. Refer to IPC–7525 for other stencil recommendations.
E. Customers should contact their board fabrication site for solder mask tolerances between and around signal pads.

PW (R–PDSO–G28) PLASTIC SMALL OUTLINE

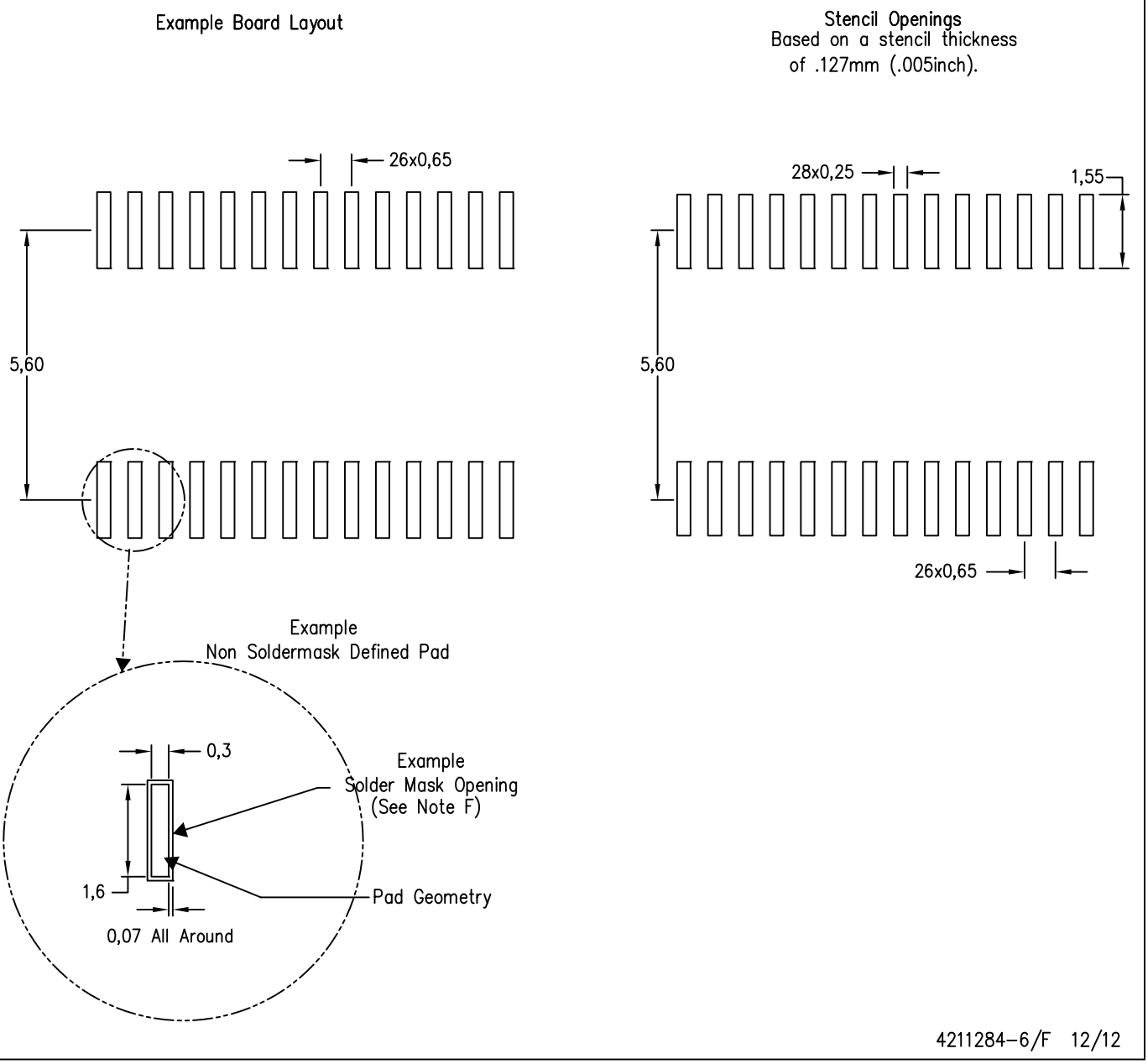

NOTES:
A. All linear dimensions are in millimeters.
B. This drawing is subject to change without notice.
C. Publication IPC–7351 is recommended for alternate design.
D. Laser cutting apertures with trapezoidal walls and also rounding corners will offer better paste release. Customers should contact their board assembly site for stencil design recommendations. Refer to IPC–7525 for other stencil recommendations.
E. Customers should contact their board fabrication site for solder mask tolerances between and around signal pads.

MSSO002E – JANUARY 1995 – REVISED DECEMBER 2001

DB (R-PDSO-G)** **PLASTIC SMALL-OUTLINE**

28 PINS SHOWN

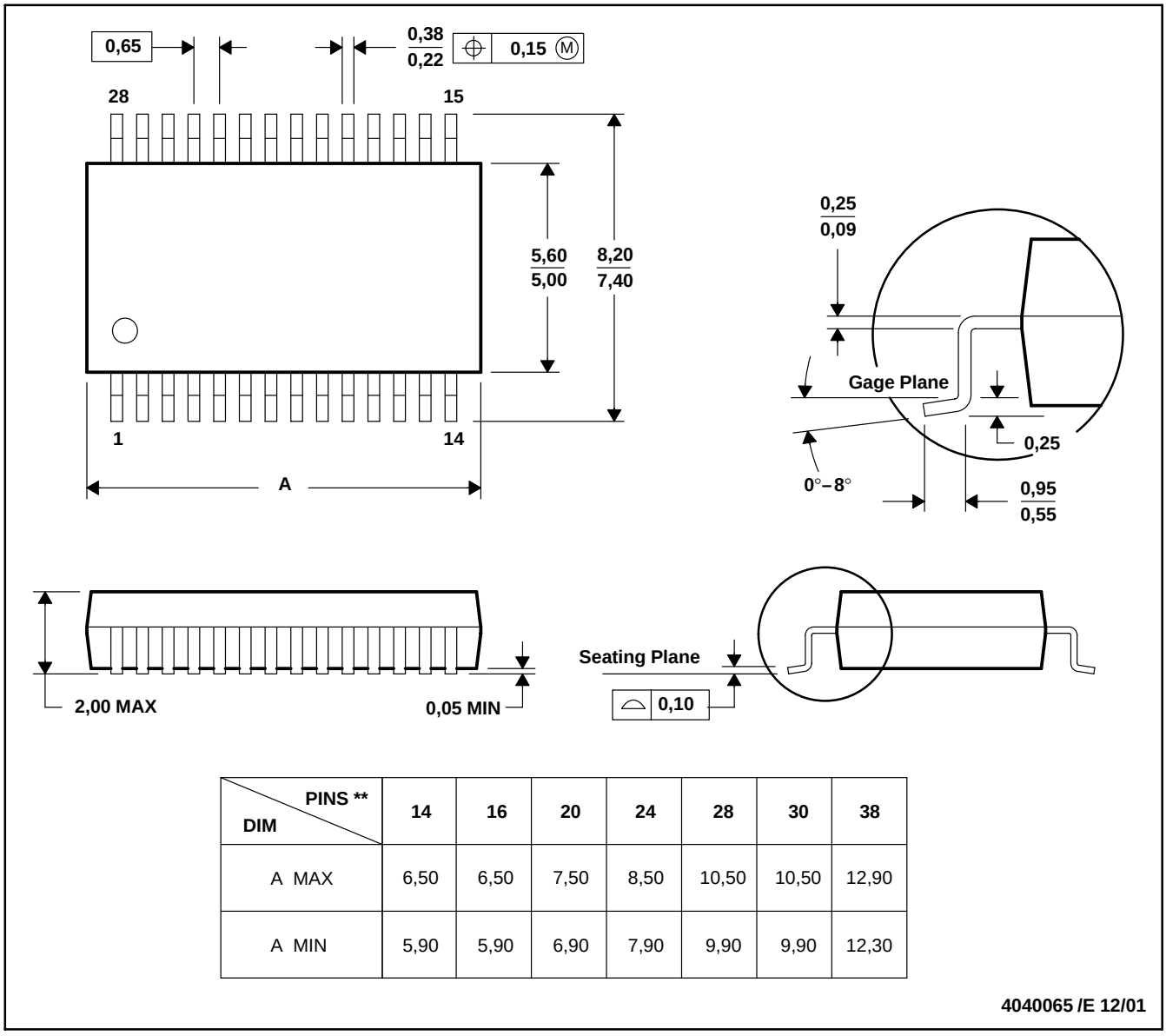

DIM \ PINS **	14	16	20	24	28	30	38
A MAX	6,50	6,50	7,50	8,50	10,50	10,50	12,90
A MIN	5,90	5,90	6,90	7,90	9,90	9,90	12,30

4040065 /E 12/01

NOTES: A. All linear dimensions are in millimeters.
B. This drawing is subject to change without notice.
C. Body dimensions do not include mold flash or protrusion not to exceed 0,15.
D. Falls within JEDEC MO-150

IMPORTANT NOTICE

Texas Instruments Incorporated and its subsidiaries (TI) reserve the right to make corrections, enhancements, improvements and other changes to its semiconductor products and services per JESD46, latest issue, and to discontinue any product or service per JESD48, latest issue. Buyers should obtain the latest relevant information before placing orders and should verify that such information is current and complete. All semiconductor products (also referred to herein as “components”) are sold subject to TI’s terms and conditions of sale supplied at the time of order acknowledgment.

TI warrants performance of its components to the specifications applicable at the time of sale, in accordance with the warranty in TI’s terms and conditions of sale of semiconductor products. Testing and other quality control techniques are used to the extent TI deems necessary to support this warranty. Except where mandated by applicable law, testing of all parameters of each component is not necessarily performed.

TI assumes no liability for applications assistance or the design of Buyers’ products. Buyers are responsible for their products and applications using TI components. To minimize the risks associated with Buyers’ products and applications, Buyers should provide adequate design and operating safeguards.

TI does not warrant or represent that any license, either express or implied, is granted under any patent right, copyright, mask work right, or other intellectual property right relating to any combination, machine, or process in which TI components or services are used. Information published by TI regarding third-party products or services does not constitute a license to use such products or services or a warranty or endorsement thereof. Use of such information may require a license from a third party under the patents or other intellectual property of the third party, or a license from TI under the patents or other intellectual property of TI.

Reproduction of significant portions of TI information in TI data books or data sheets is permissible only if reproduction is without alteration and is accompanied by all associated warranties, conditions, limitations, and notices. TI is not responsible or liable for such altered documentation. Information of third parties may be subject to additional restrictions.

Resale of TI components or services with statements different from or beyond the parameters stated by TI for that component or service voids all express and any implied warranties for the associated TI component or service and is an unfair and deceptive business practice. TI is not responsible or liable for any such statements.

Buyer acknowledges and agrees that it is solely responsible for compliance with all legal, regulatory and safety-related requirements concerning its products, and any use of TI components in its applications, notwithstanding any applications-related information or support that may be provided by TI. Buyer represents and agrees that it has all the necessary expertise to create and implement safeguards which anticipate dangerous consequences of failures, monitor failures and their consequences, lessen the likelihood of failures that might cause harm and take appropriate remedial actions. Buyer will fully indemnify TI and its representatives against any damages arising out of the use of any TI components in safety-critical applications.

In some cases, TI components may be promoted specifically to facilitate safety-related applications. With such components, TI’s goal is to help enable customers to design and create their own end-product solutions that meet applicable functional safety standards and requirements. Nonetheless, such components are subject to these terms.

No TI components are authorized for use in FDA Class III (or similar life-critical medical equipment) unless authorized officers of the parties have executed a special agreement specifically governing such use.

Only those TI components which TI has specifically designated as military grade or “enhanced plastic” are designed and intended for use in military/aerospace applications or environments. Buyer acknowledges and agrees that any military or aerospace use of TI components which have ***not*** been so designated is solely at the Buyer's risk, and that Buyer is solely responsible for compliance with all legal and regulatory requirements in connection with such use.

TI has specifically designated certain components as meeting ISO/TS16949 requirements, mainly for automotive use. In any case of use of non-designated products, TI will not be responsible for any failure to meet ISO/TS16949.

Products		**Applications**	
Audio	www.ti.com/audio	Automotive and Transportation	www.ti.com/automotive
Amplifiers	amplifier.ti.com	Communications and Telecom	www.ti.com/communications
Data Converters	dataconverter.ti.com	Computers and Peripherals	www.ti.com/computers
DLP® Products	www.dlp.com	Consumer Electronics	www.ti.com/consumer-apps
DSP	dsp.ti.com	Energy and Lighting	www.ti.com/energy
Clocks and Timers	www.ti.com/clocks	Industrial	www.ti.com/industrial
Interface	interface.ti.com	Medical	www.ti.com/medical
Logic	logic.ti.com	Security	www.ti.com/security
Power Mgmt	power.ti.com	Space, Avionics and Defense	www.ti.com/space-avionics-defense
Microcontrollers	microcontroller.ti.com	Video and Imaging	www.ti.com/video
RFID	www.ti-rfid.com		
OMAP Applications Processors	www.ti.com/omap	**TI E2E Community**	e2e.ti.com
Wireless Connectivity	www.ti.com/wirelessconnectivity		

Mailing Address: Texas Instruments, Post Office Box 655303, Dallas, Texas 75265
Copyright © 2012, Texas Instruments Incorporated