B - B

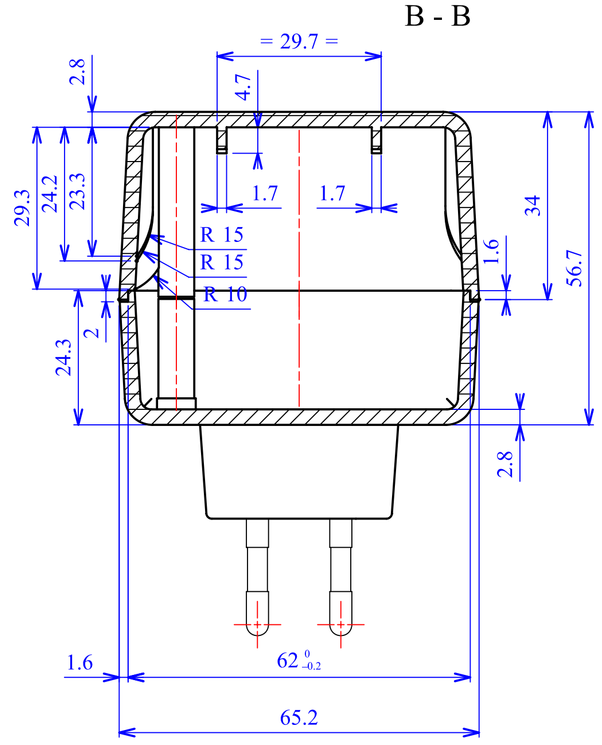

C - C

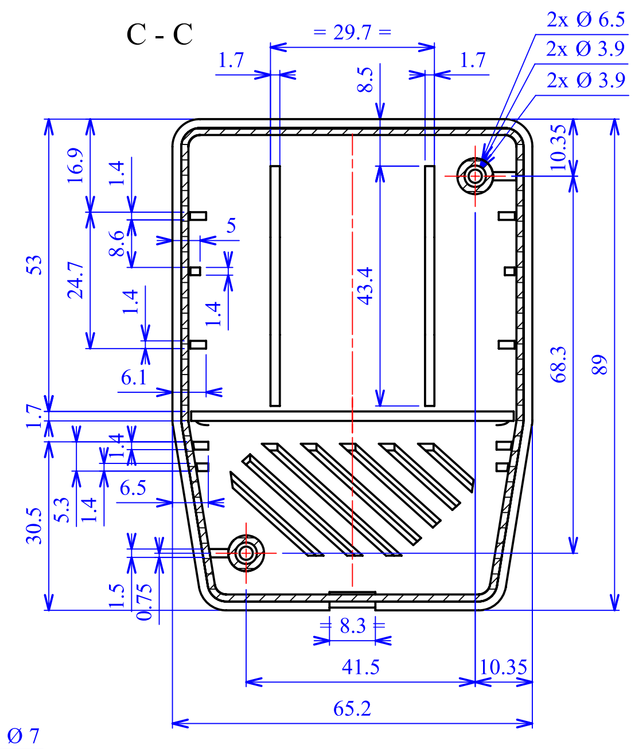

A - A

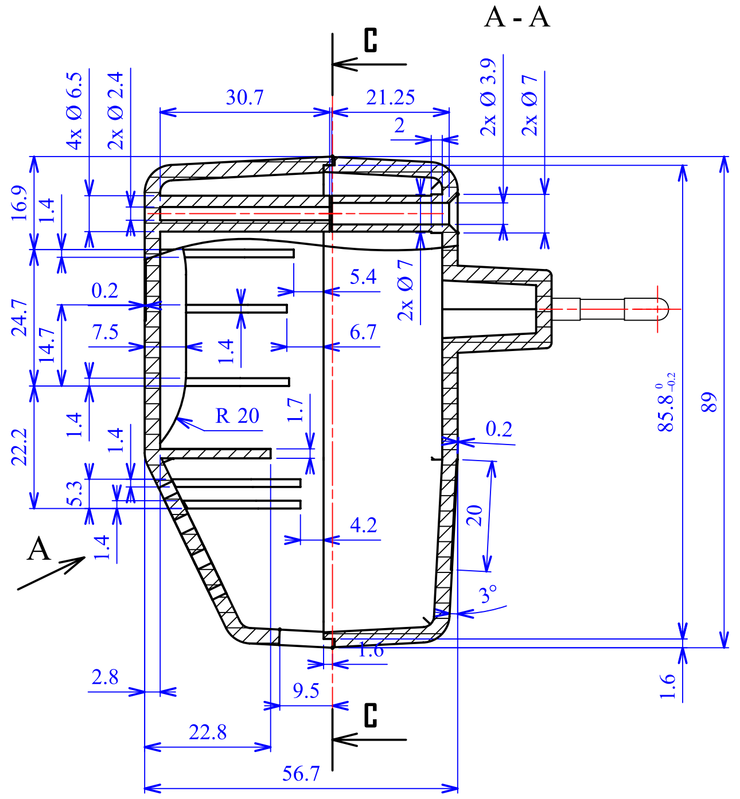

A

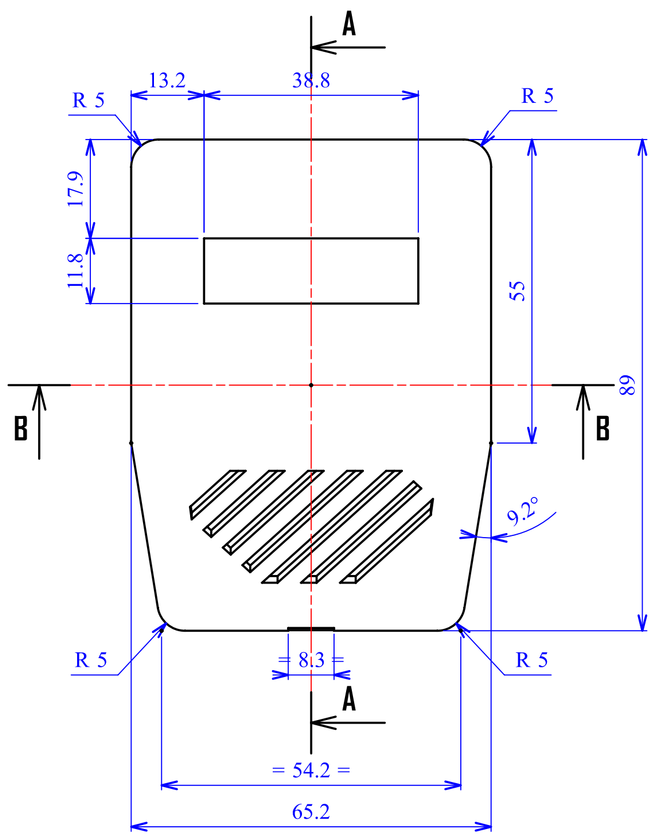

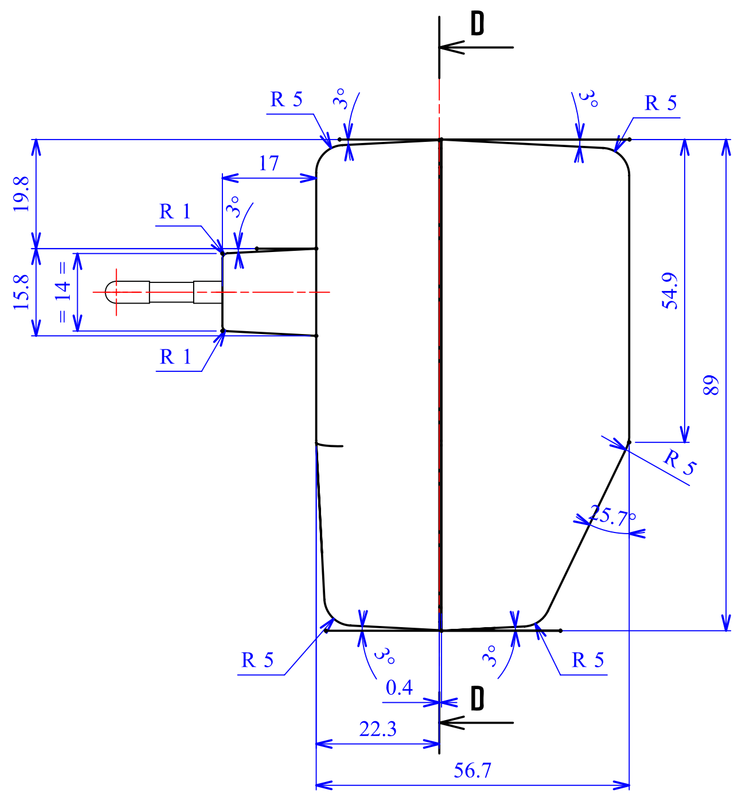

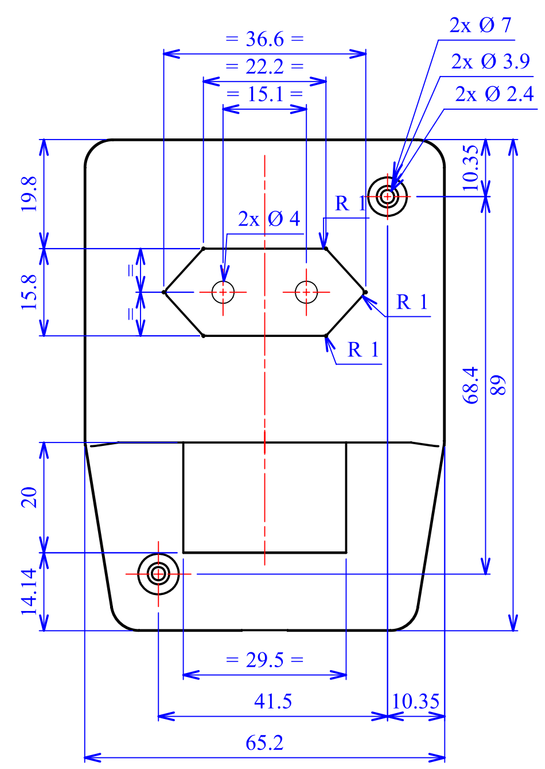

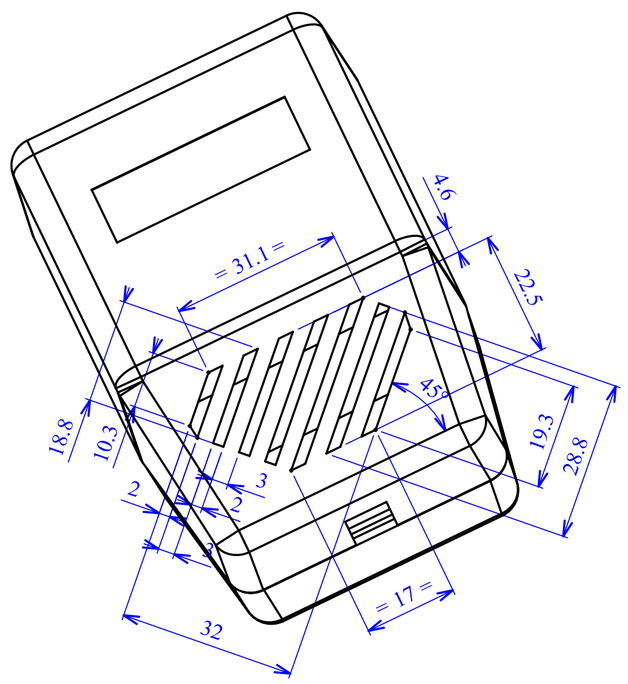

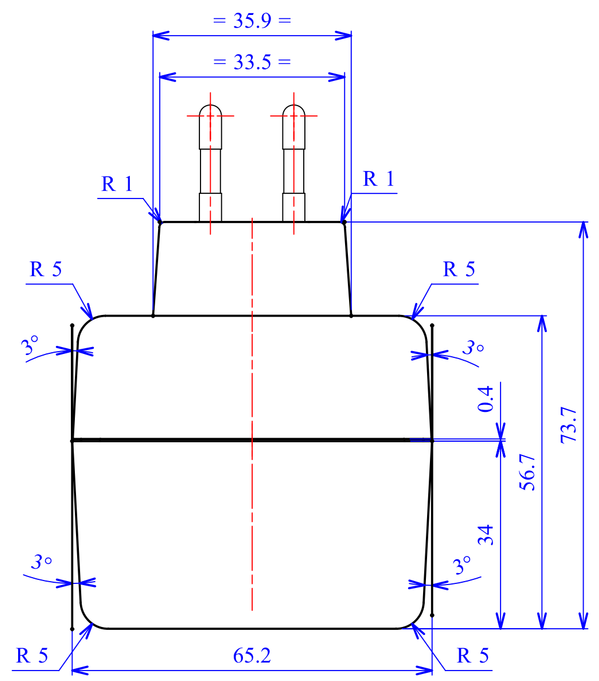

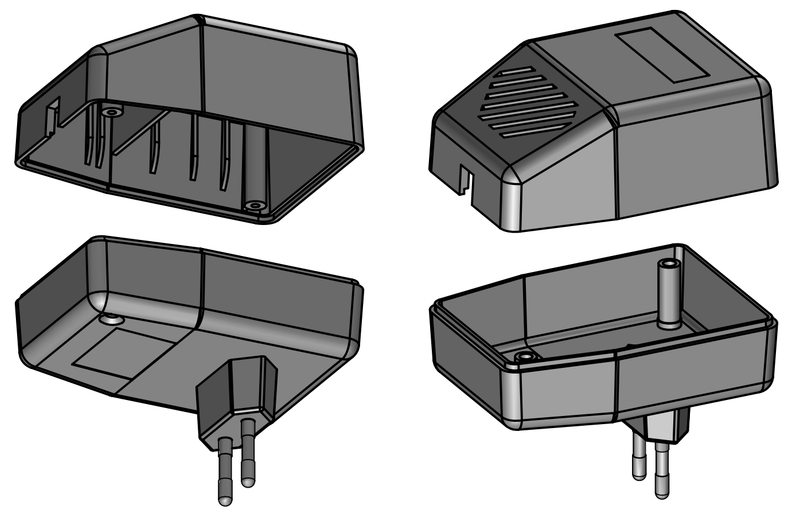

D - D

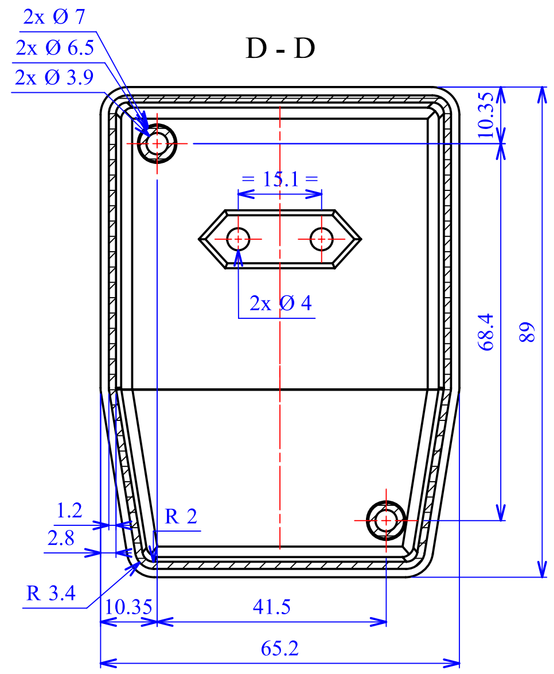

Model produktu	Z-64	
Format: A4	Materiał: Polystyrene (PS)	
Skala: 1:1	Tolerancja: +/- 0.1	



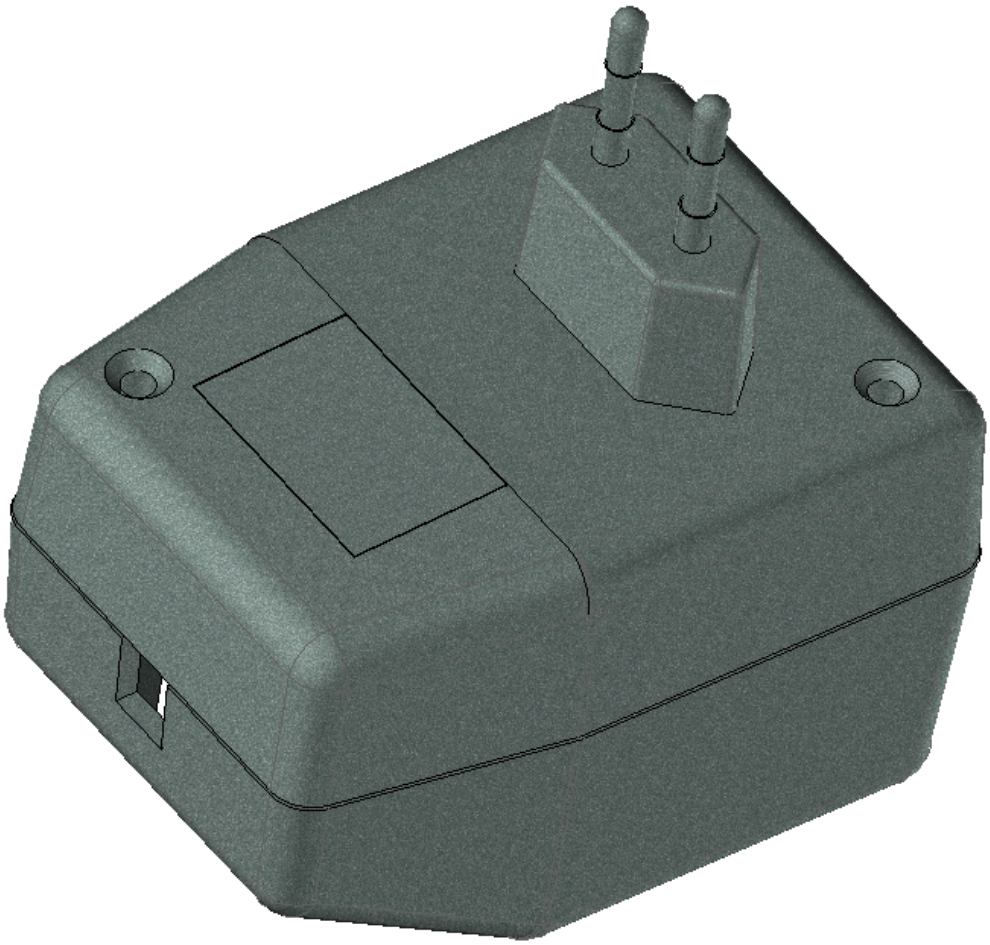



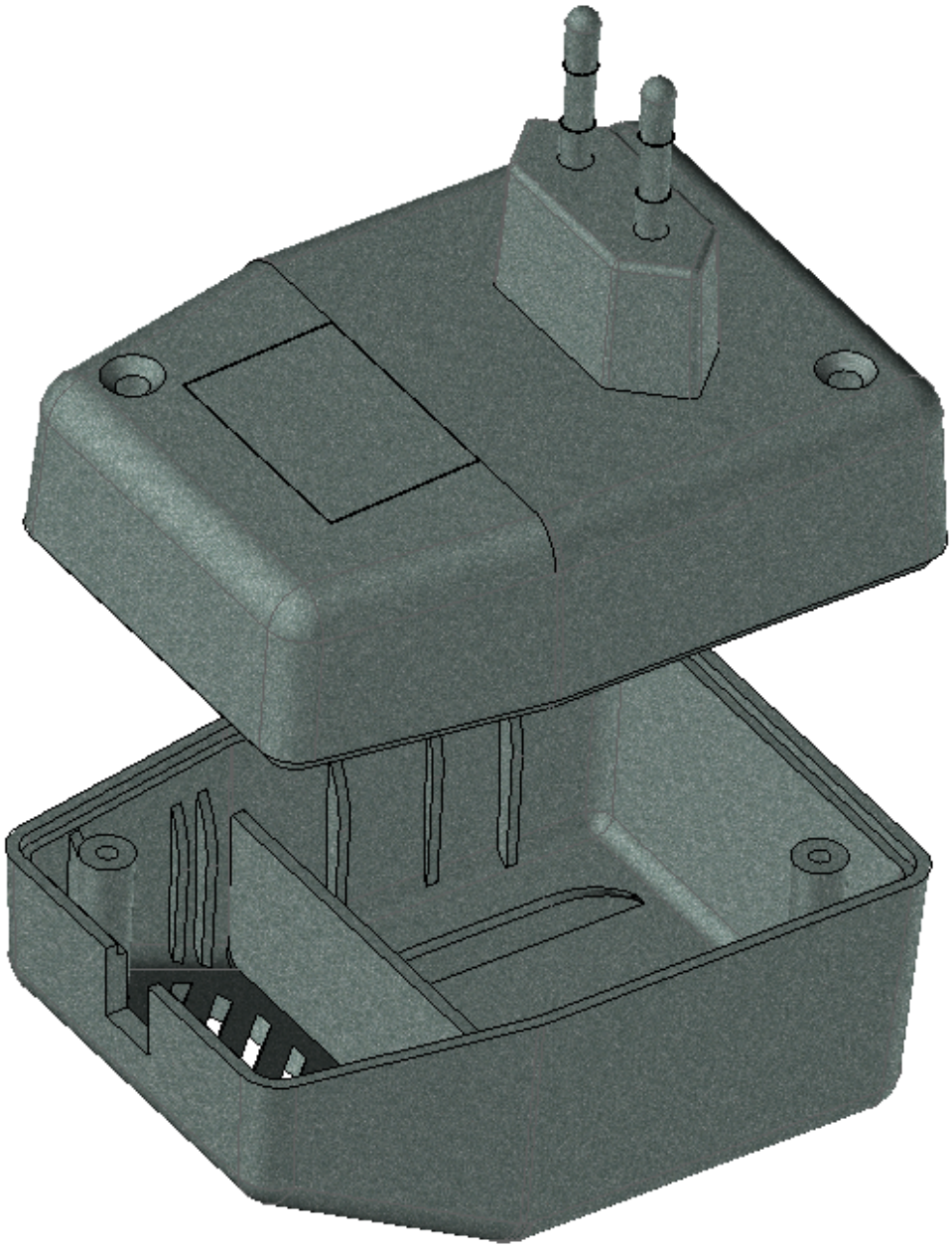

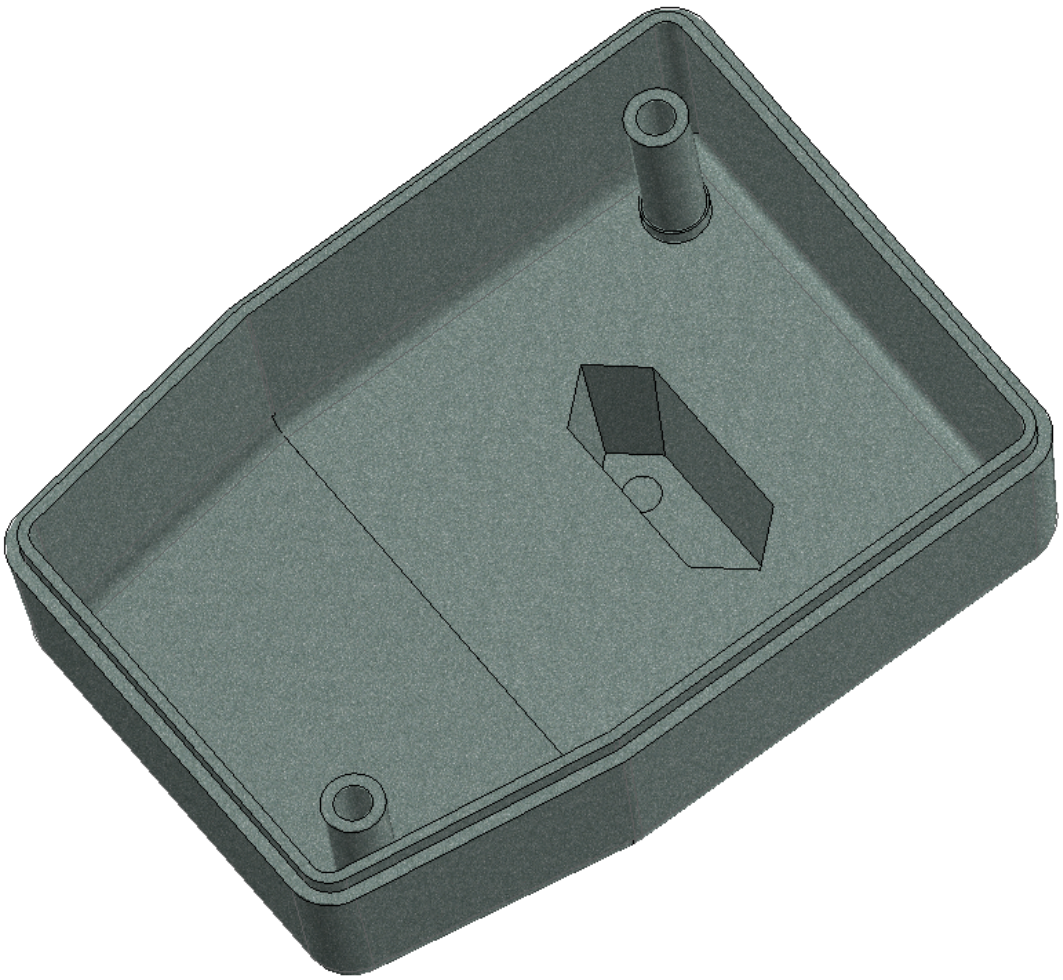



A - A

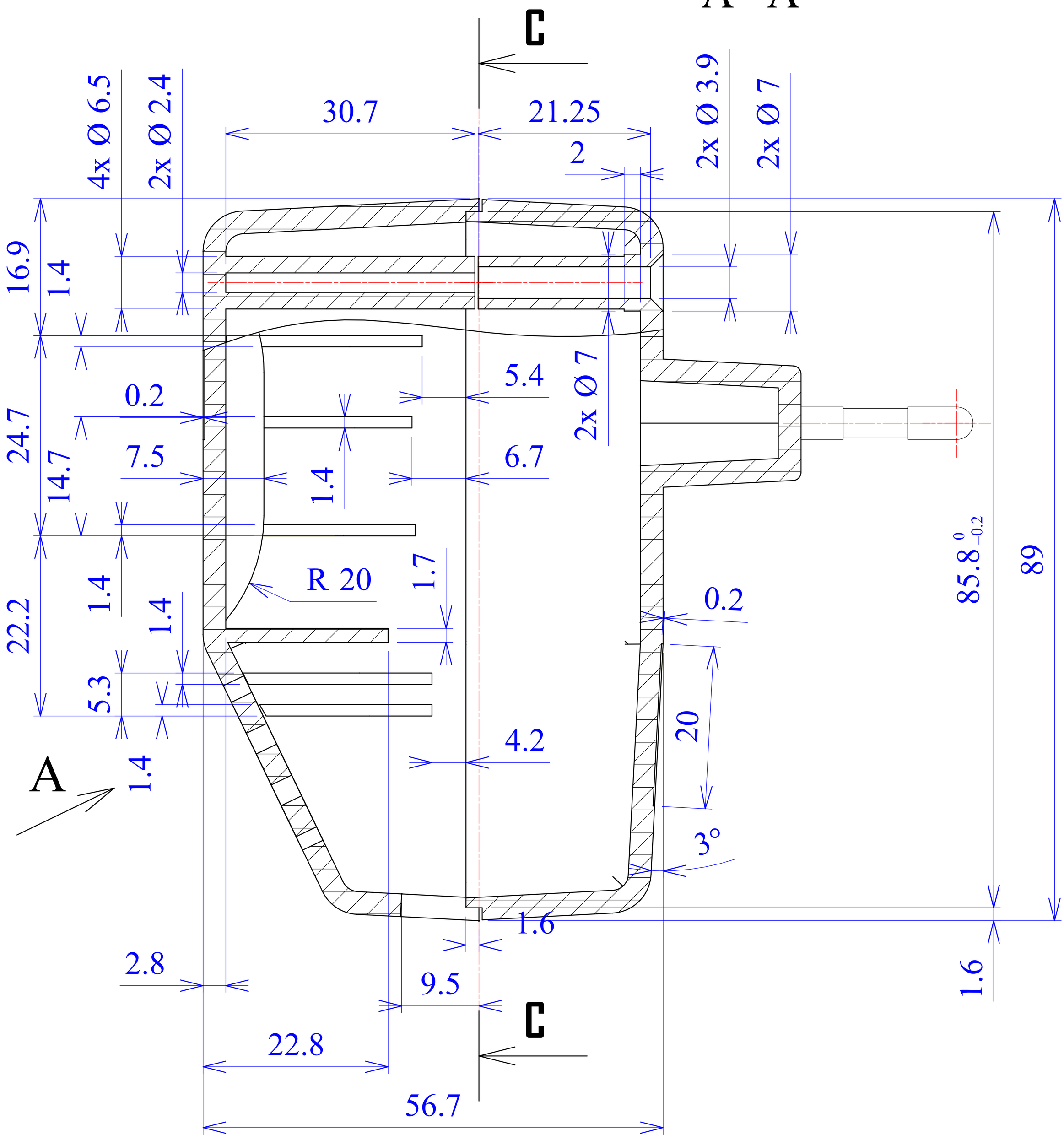
C
4x Ø 6.5
2x Ø 2.4
30.7
21.25
2
2x Ø 3.9
2x Ø 7
16.9
1.4
24.7
0.2
5.4
2x Ø 7
7.5
14.7
1.4
6.7
1.4
R 20
1.7
0.2
22.2
1.4
1.4
5.3
20
4.2
A
1.4
3°
85.8 0 -0.2
89
1.6
2.8
9.5
C
22.8
56.7

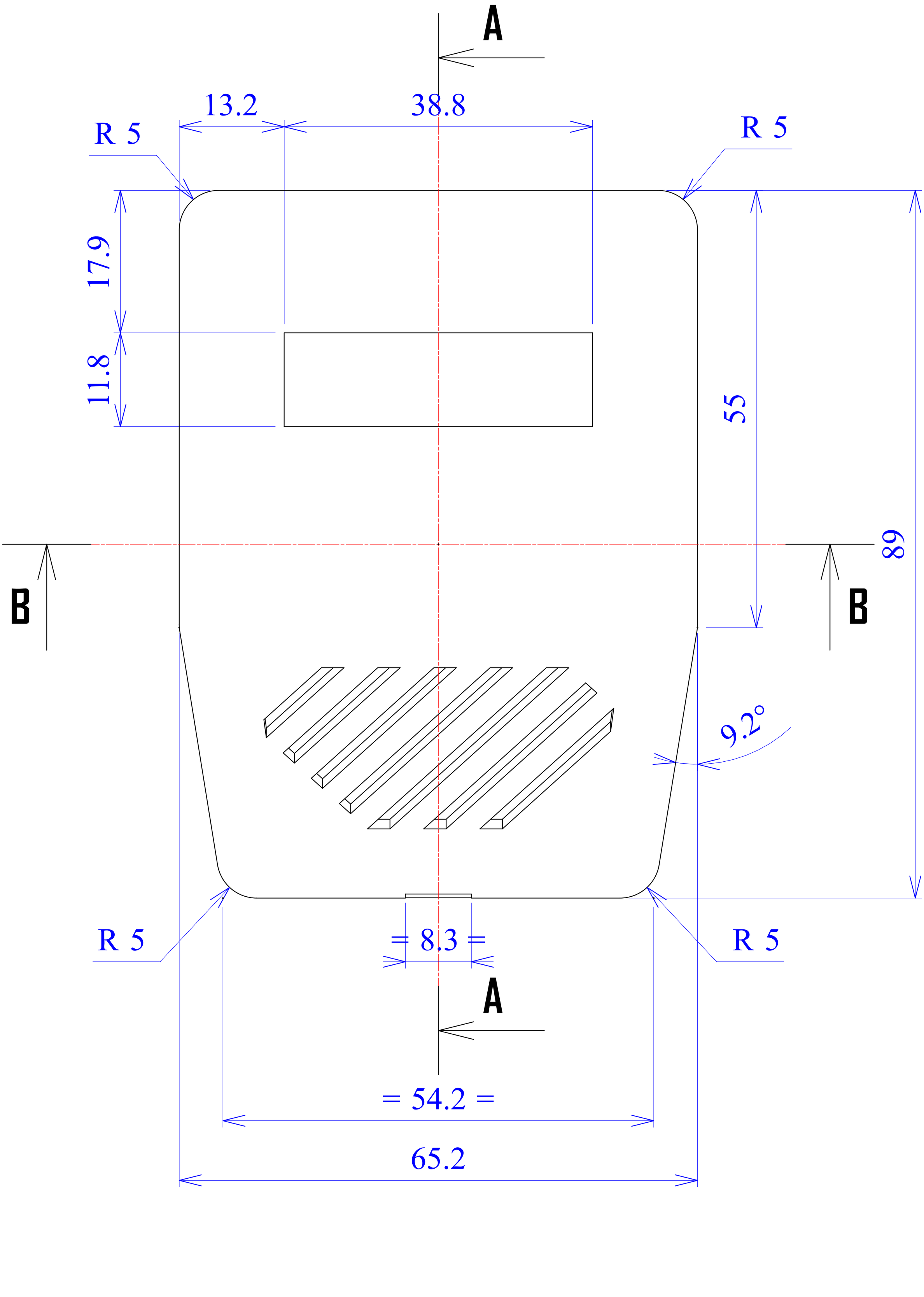
A
13.2
38.8
R 5
R 5
17.9
11.8
55
89
B
B
9.2°
R 5
8.3
R 5
A
54.2
65.2

B - B

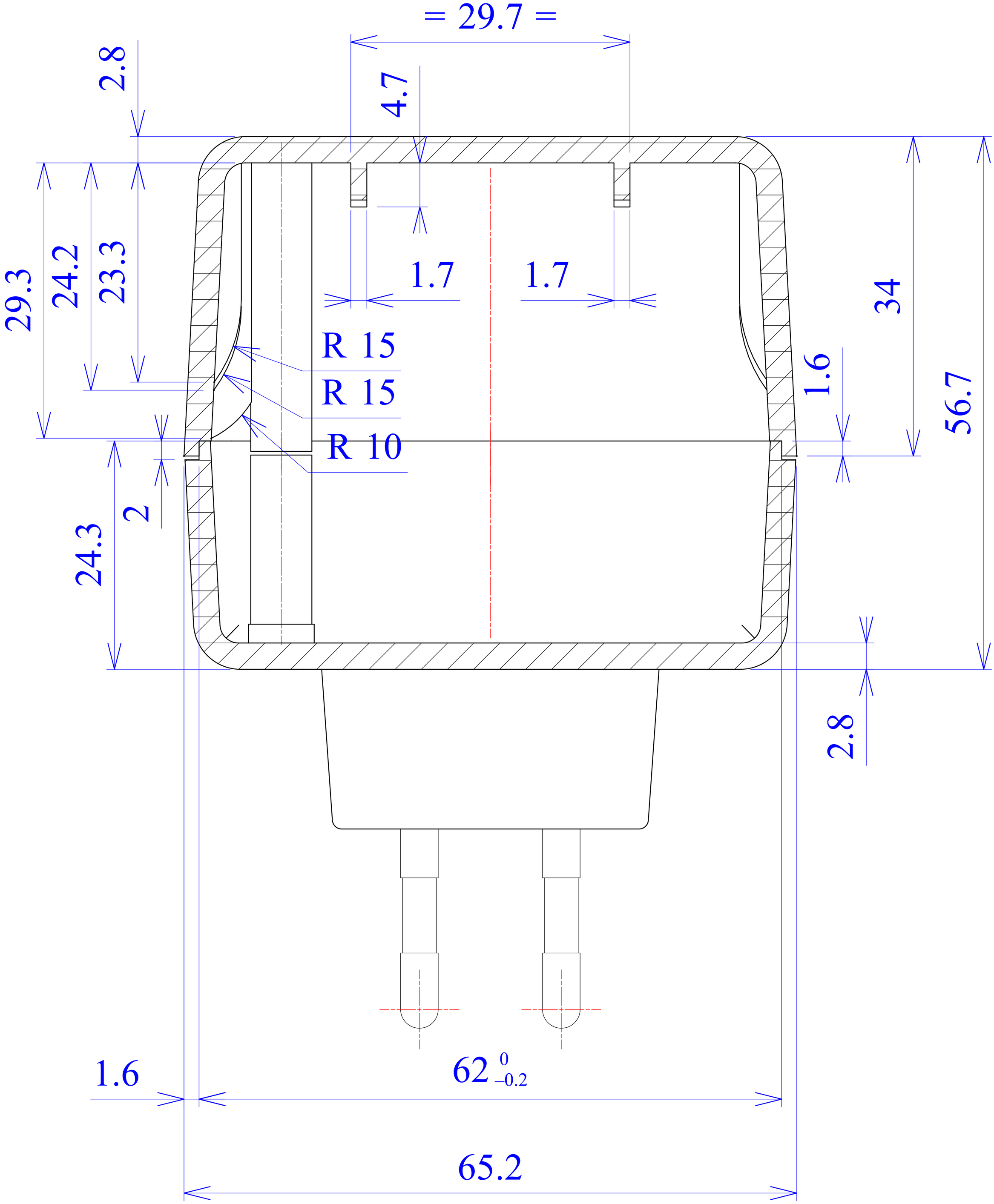
= 29.7 =
2.8
4.7
29.3
24.2
23.3
1.7
1.7
R 15
R 15
R 10
1.6
34
56.7
24.3
2
2.8
1.6
62 0 –0.2
65.2

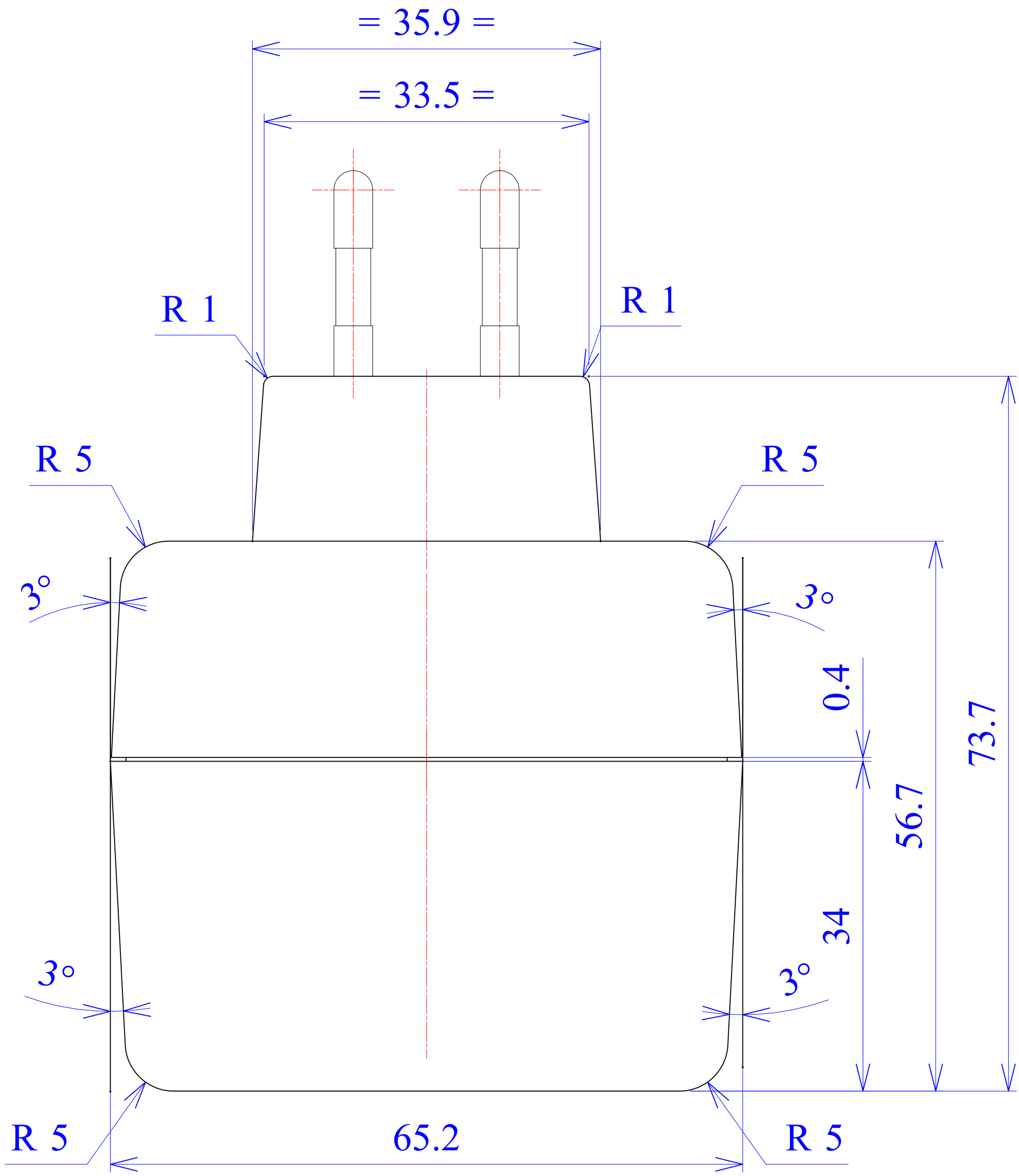
= 35.9 =
= 33.5 =
R 1
R 1
R 5
R 5
3°
3°
0.4
73.7
56.7
34
3°
3°
R 5
65.2
R 5

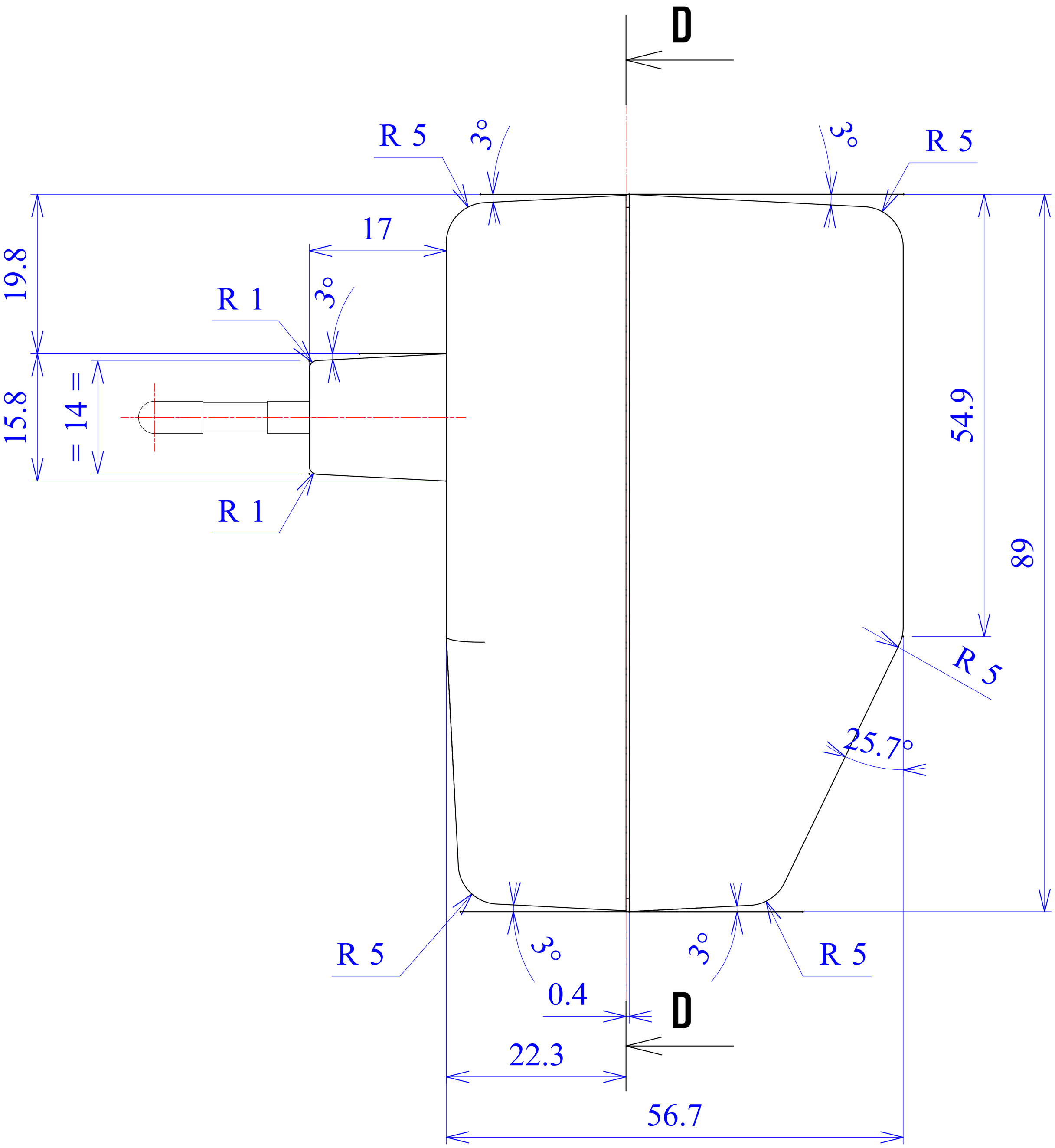
D
R 5
3°
17
19.8
R 1
3°
15.8
= 14 =
R 1
54.9
89
R 5
25.7°
R 5
3°
3°
R 5
0.4
D
22.3
56.7

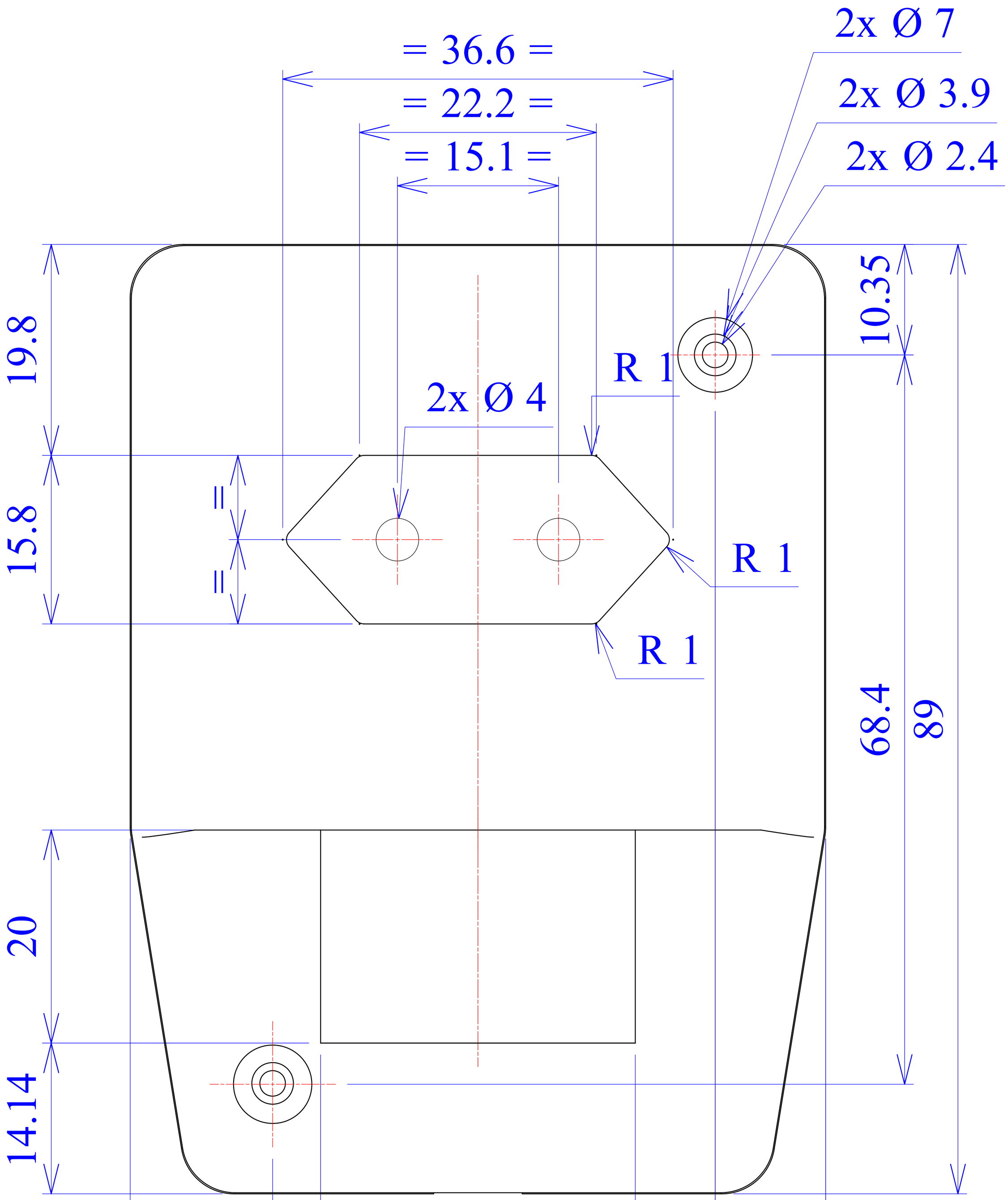
= 36.6 =
= 22.2 =
= 15.1 =
2x Ø 7
2x Ø 3.9
2x Ø 2.4
19.8
15.8
10.35
2x Ø 4
R 1
R 1
R 1
68.4
89
20
14.14
= 29.5 =
41.5
10.35
65.2

C - C

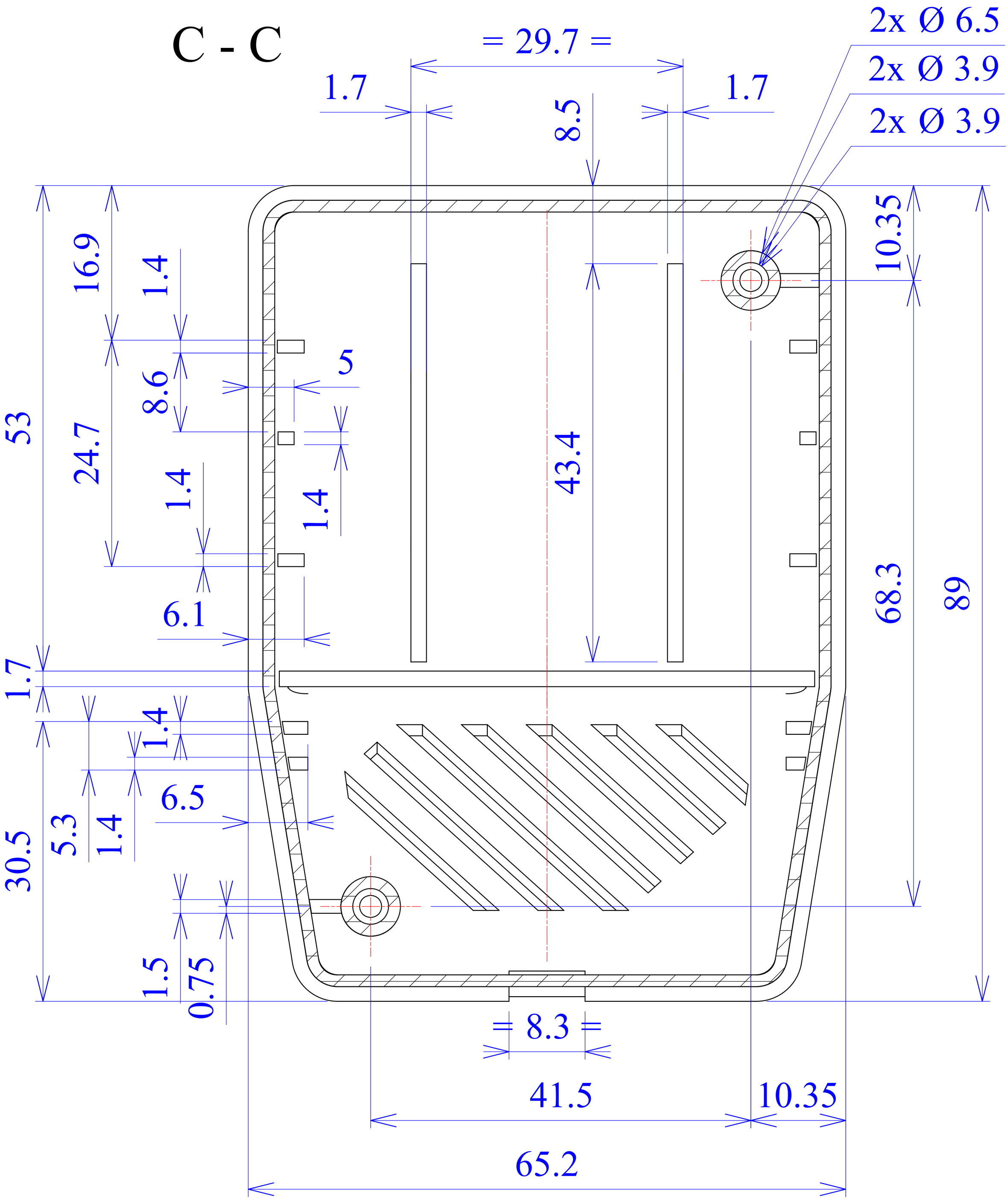
= 29.7 =
1.7
8.5
1.7
2x Ø 6.5
2x Ø 3.9
2x Ø 3.9
10.35
16.9
1.4
5
8.6
53
24.7
1.4
1.4
43.4
68.3
89
6.1
1.7
1.4
6.5
5.3
1.4
30.5
1.5
0.75
= 8.3 =
41.5
10.35
65.2

D - D

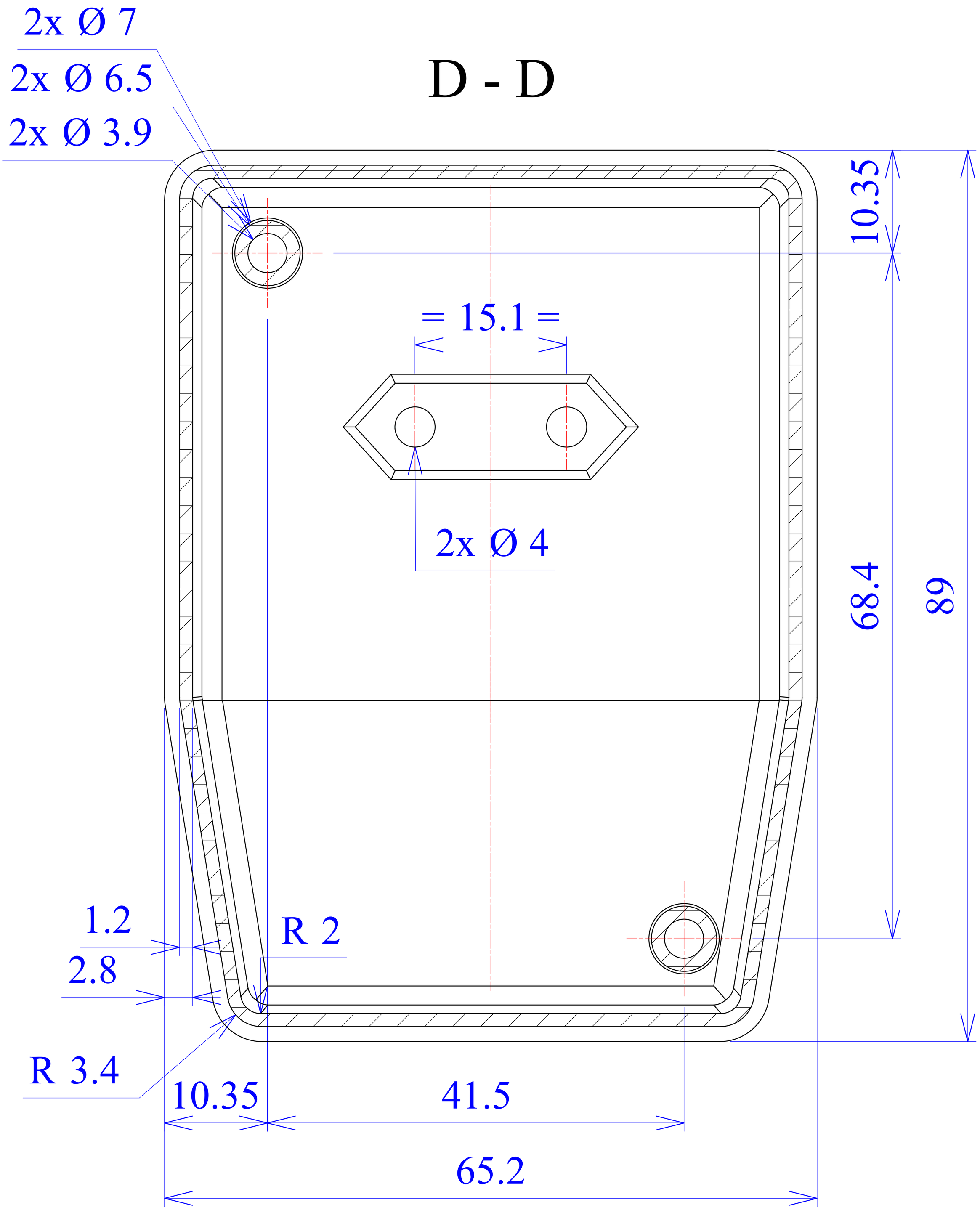

A

