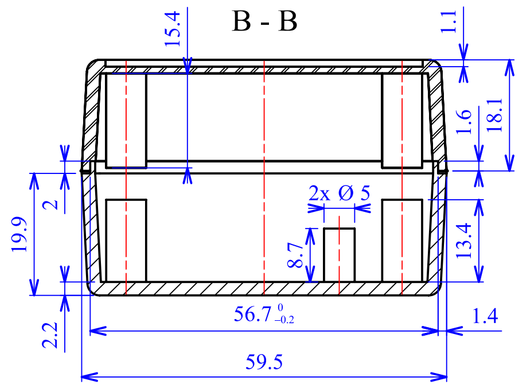

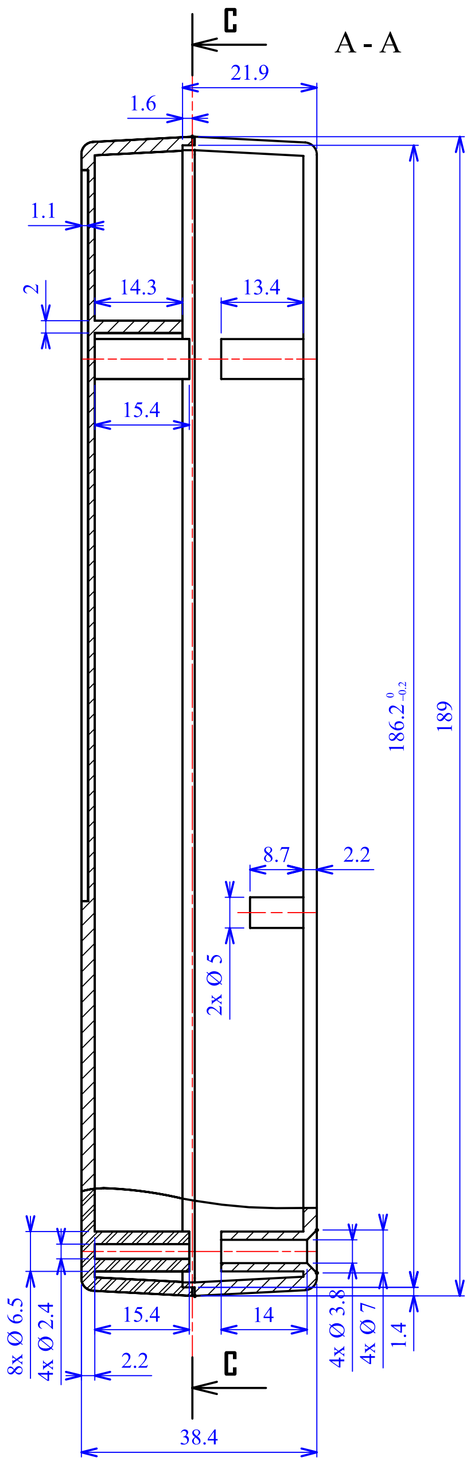

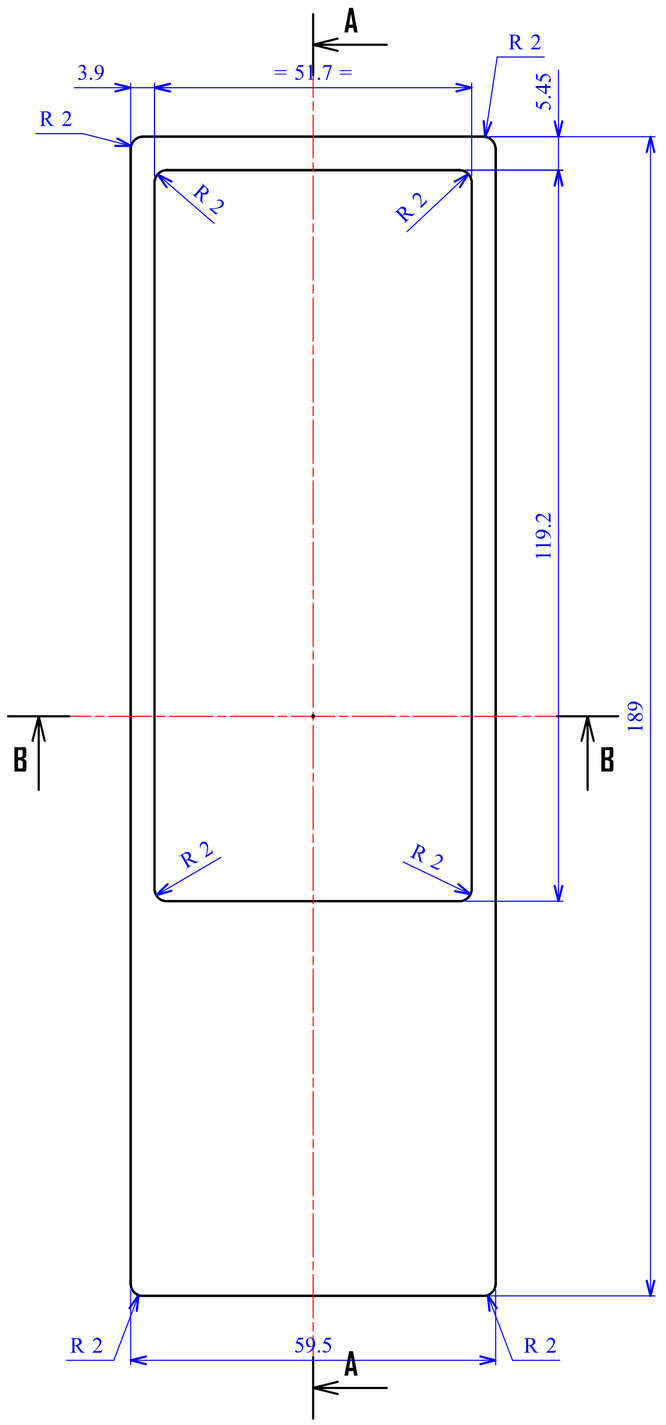

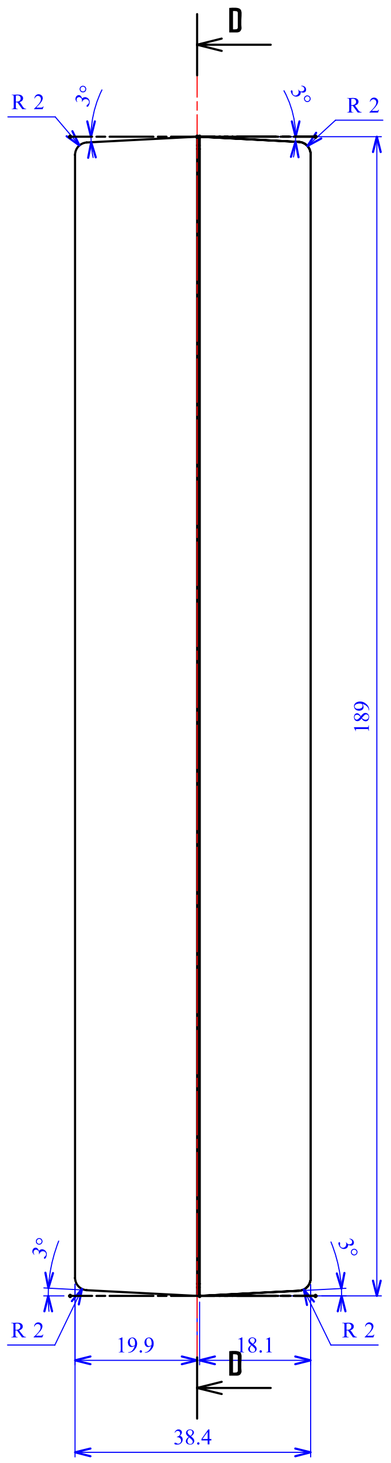

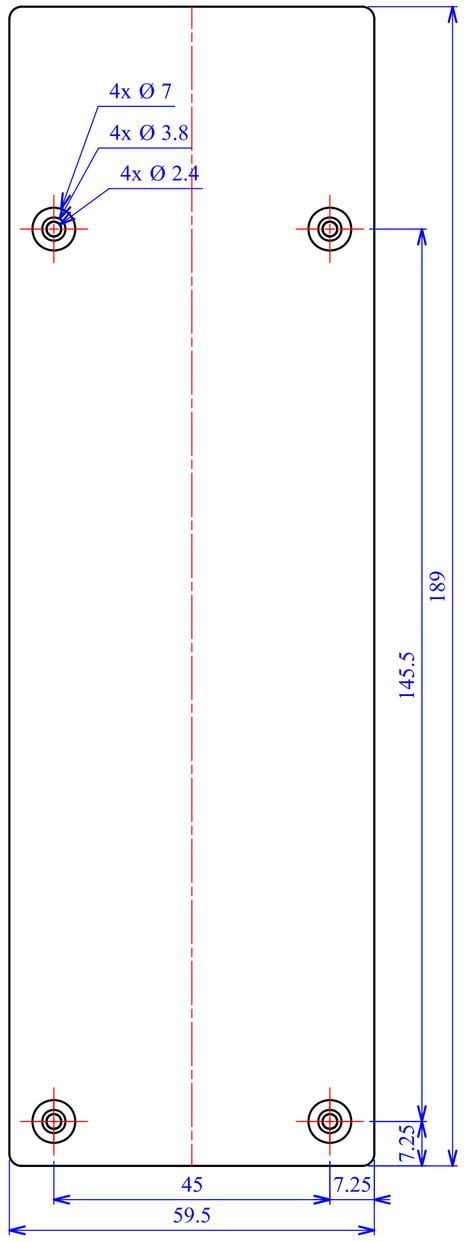

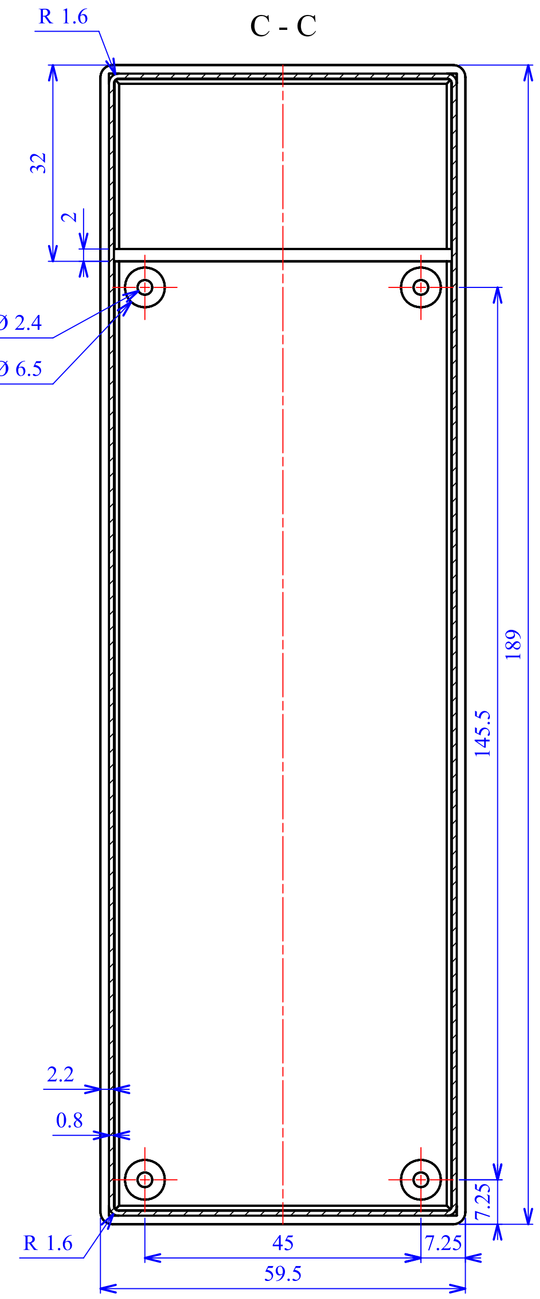

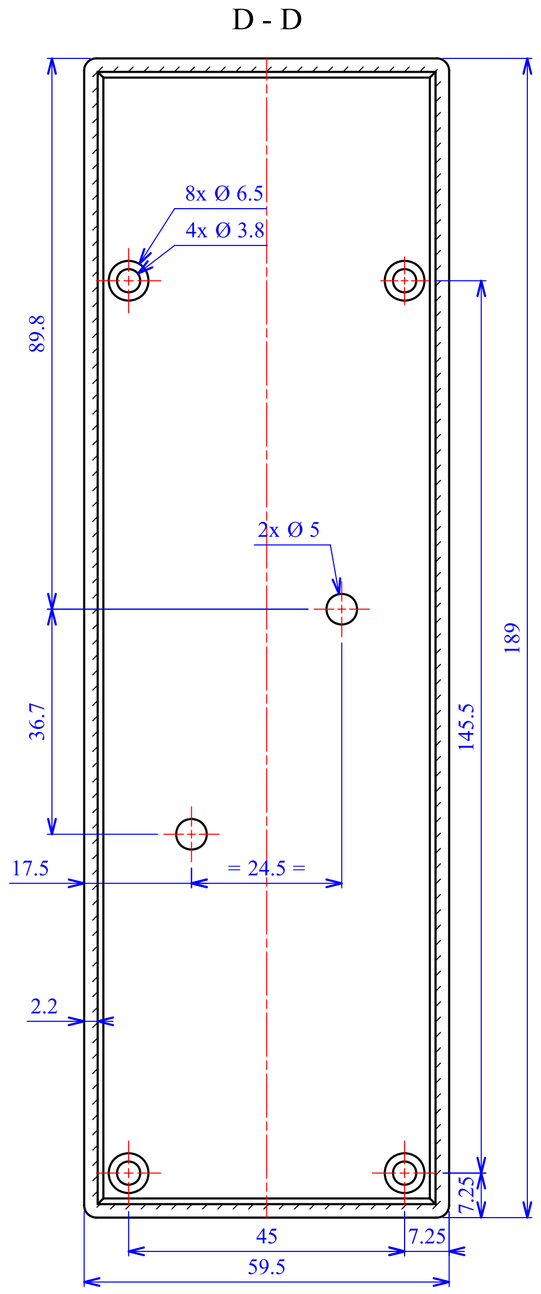

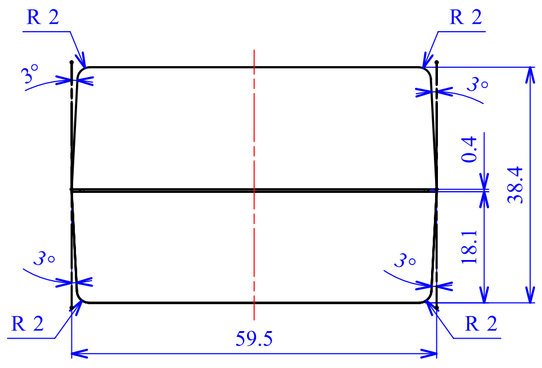

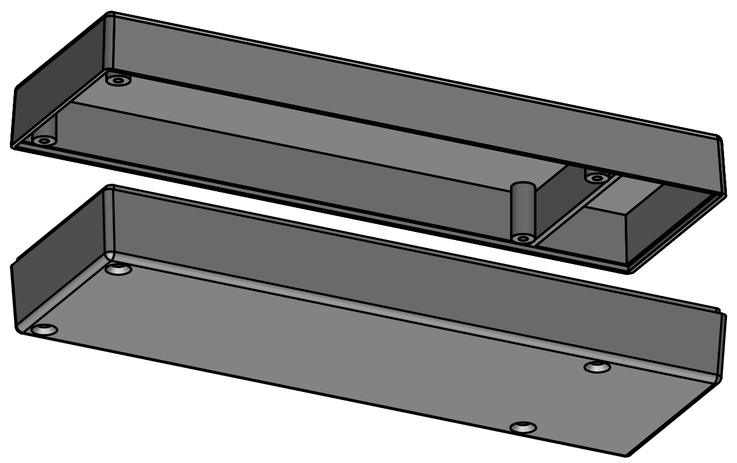

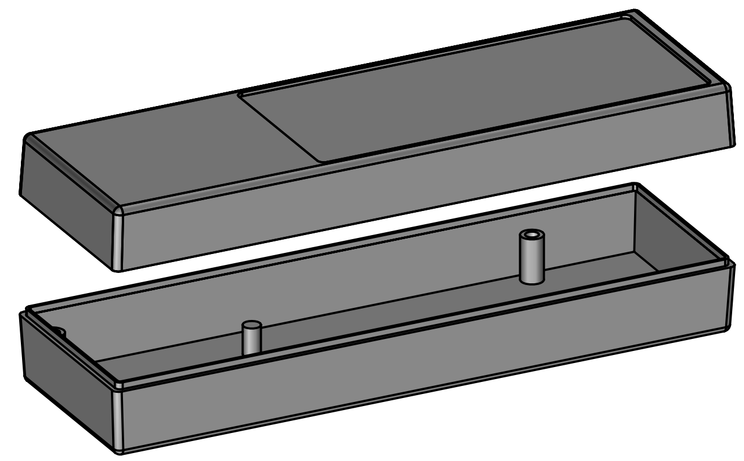

Model produktu	Z-32 B	
Format: A4	Materiał: Polystyrene (PS)	
Skala: 1:1	Tolerancja: +/- 0.1	

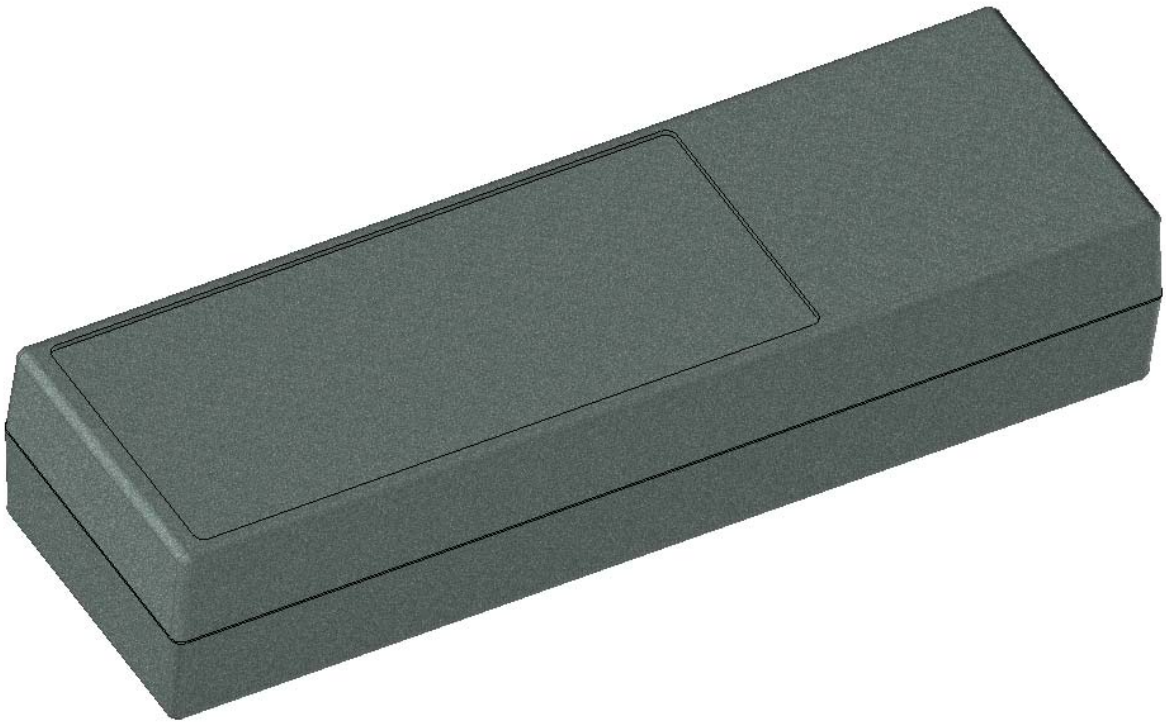



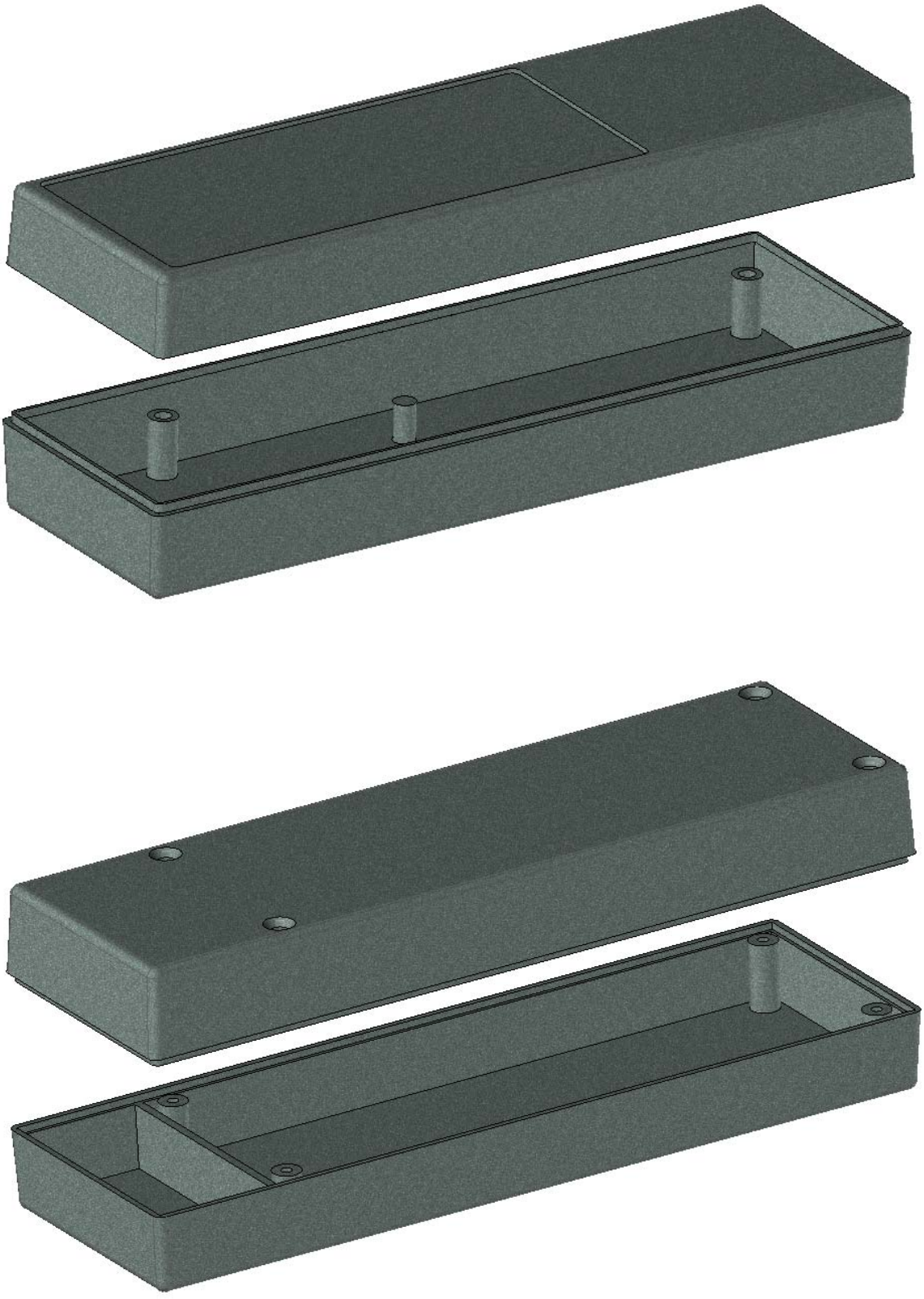

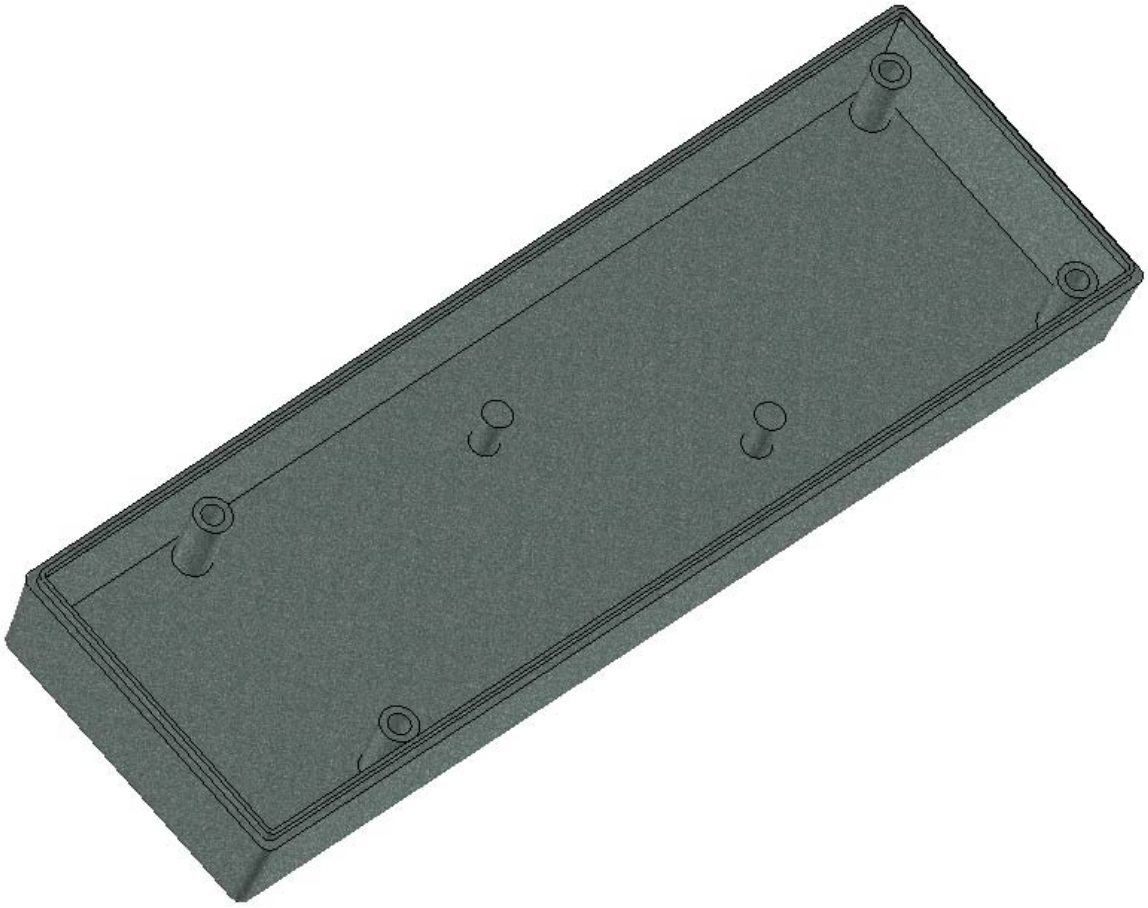

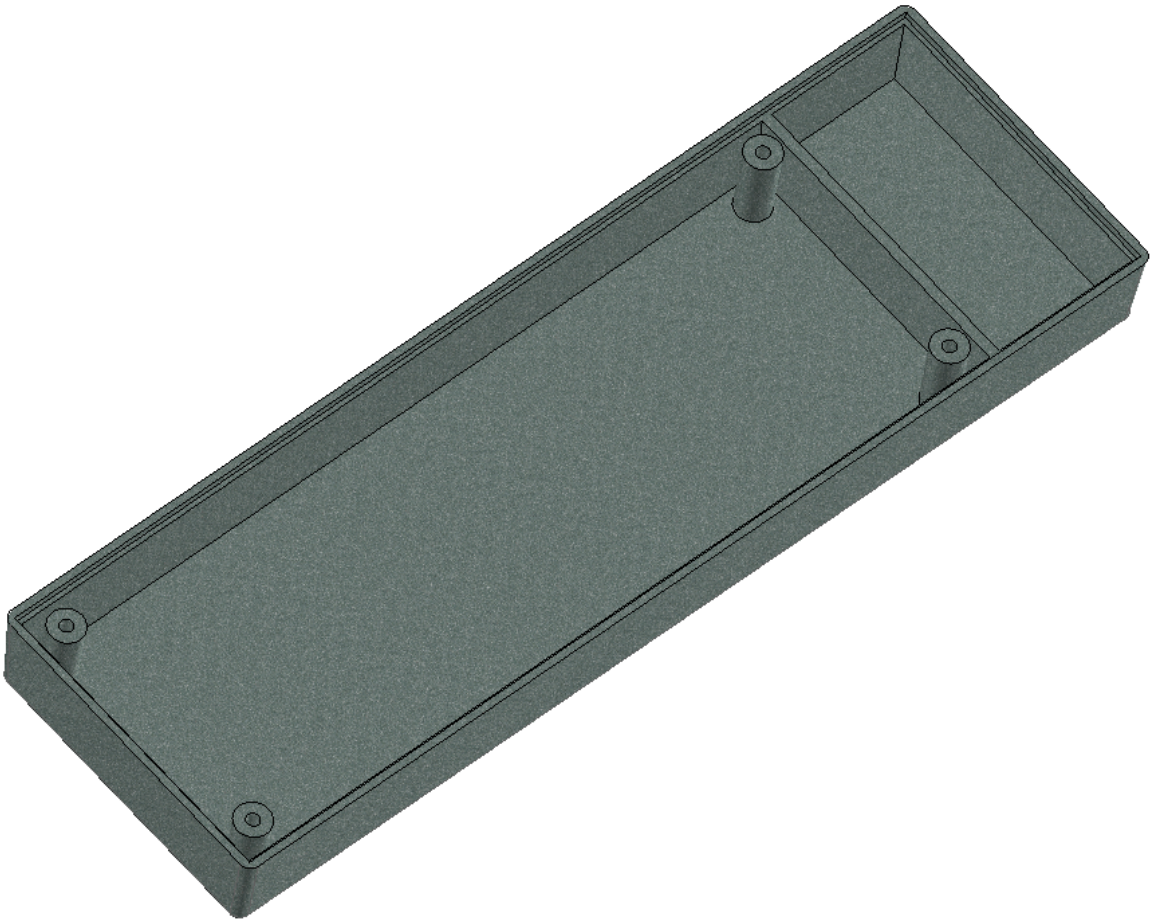

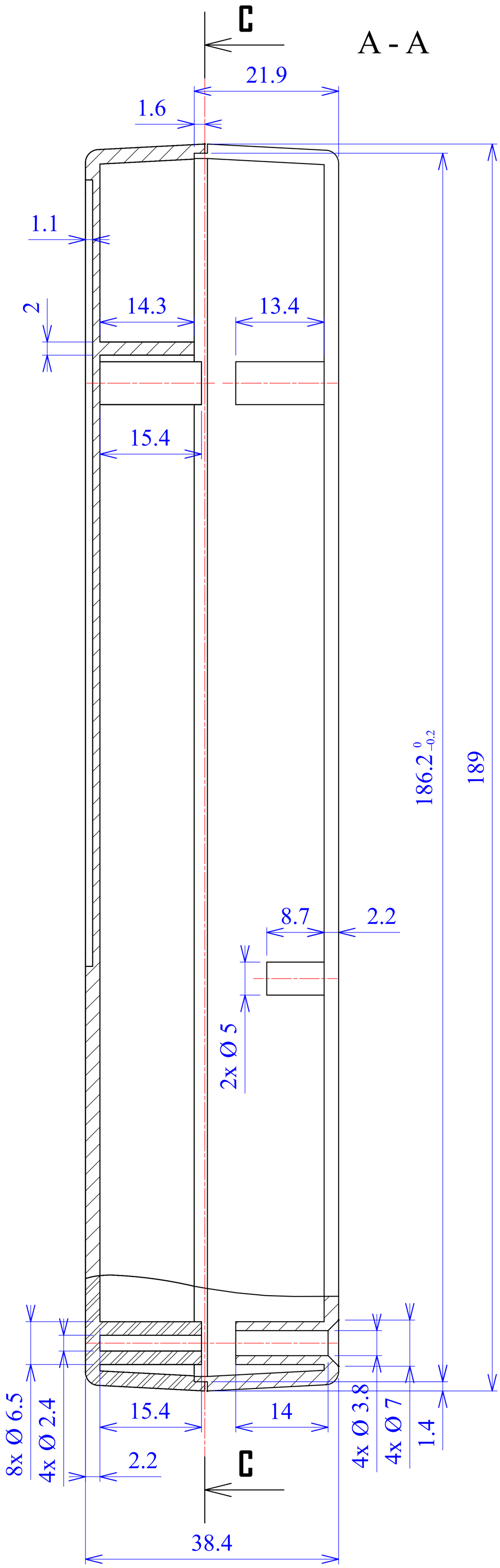
C
A - A
21.9
1.6
1.1
2
14.3
13.4
15.4
186.2 0 -0.2
189
8.7
2.2
2x Ø 5
8x Ø 6.5
4x Ø 2.4
15.4
14
2.2
C
4x Ø 3.8
4x Ø 7
1.4
38.4

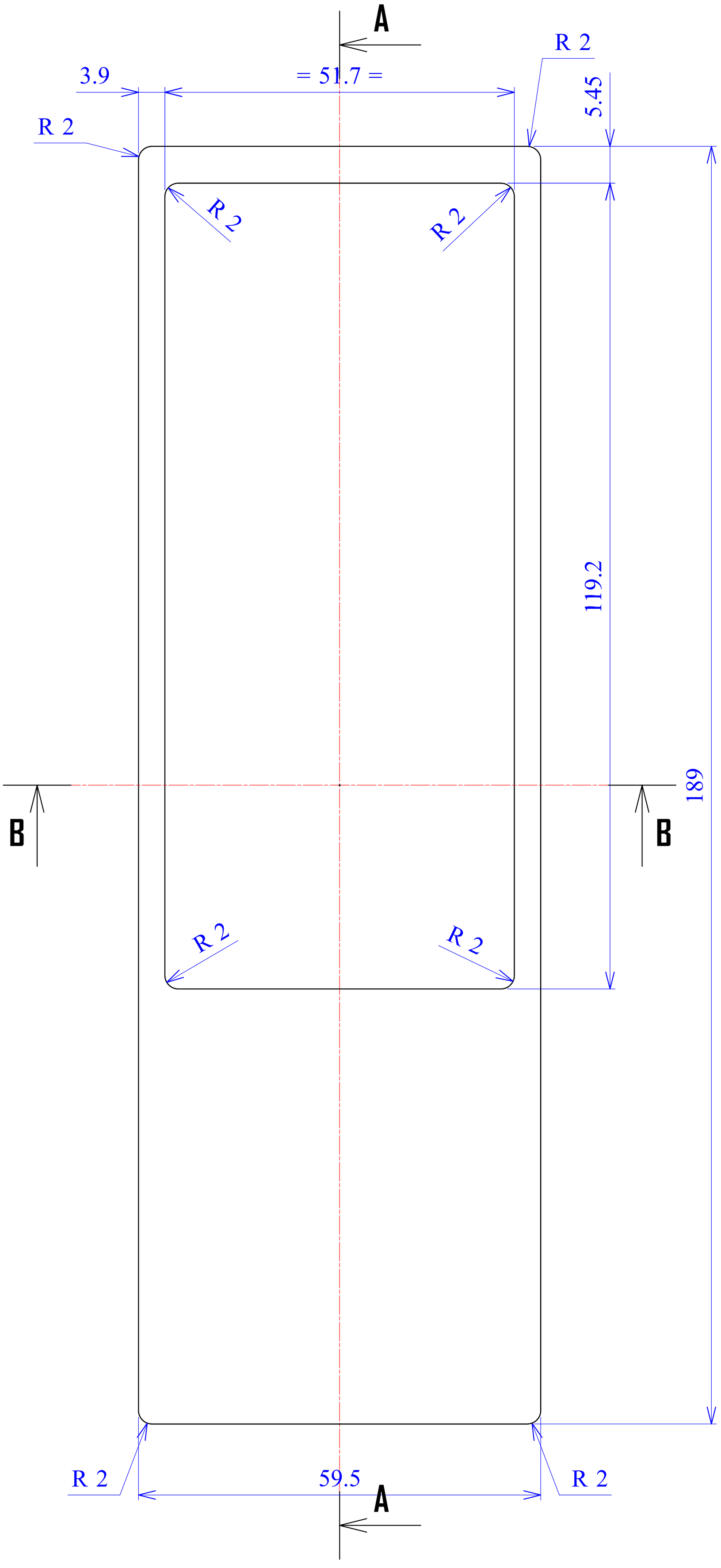
A
R 2
3.9
= 51.7 =
R 2
5.45
R 2
R 2
119.2
189
B
B
R 2
R 2
R 2
59.5
A

B - B

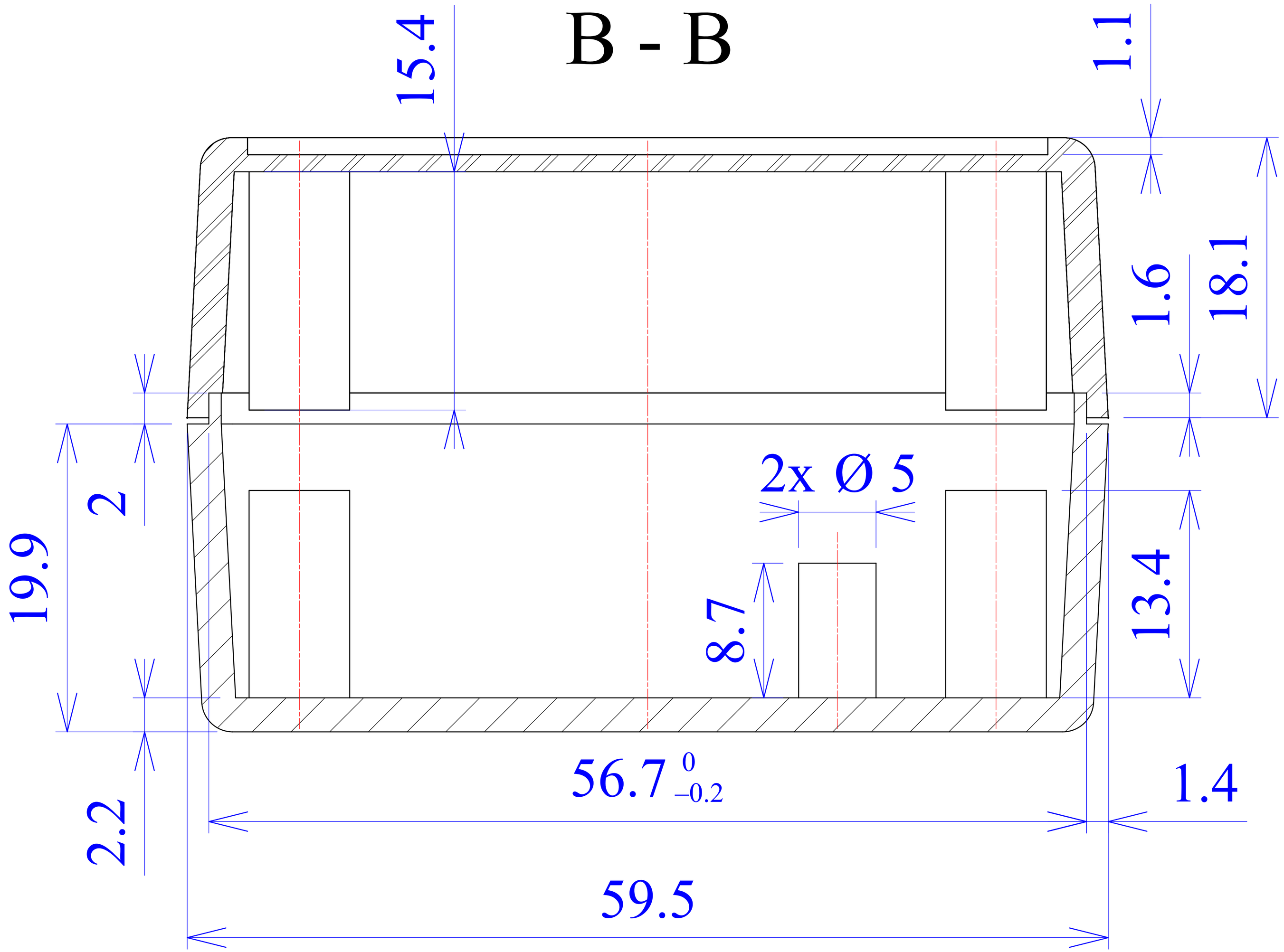

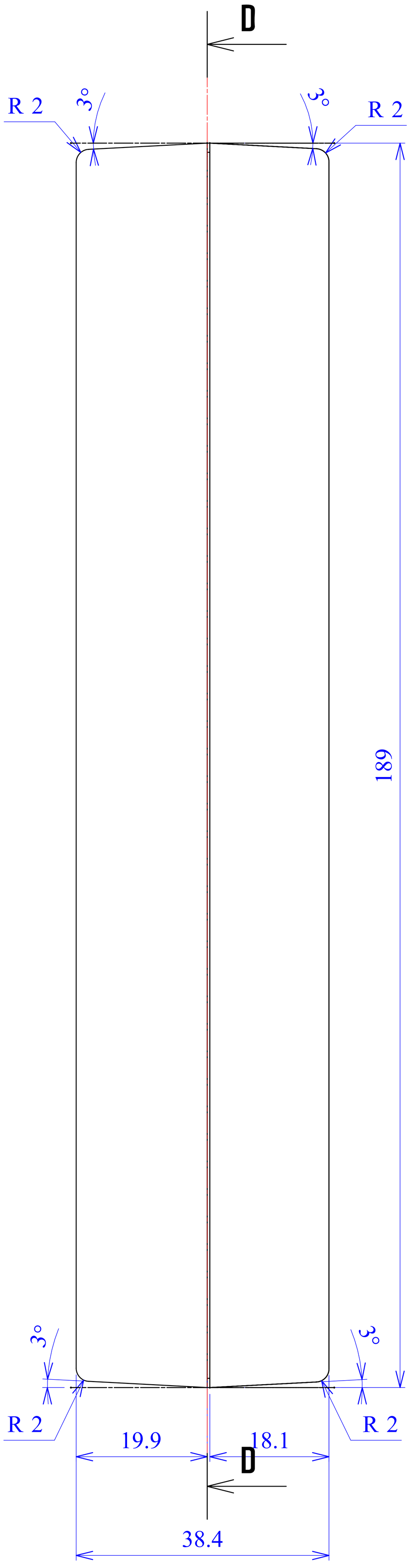
D
R 2
3°
3°
R 2
189
1
3°
3°
R 2
R 2
19.9
18.1
D
38.4

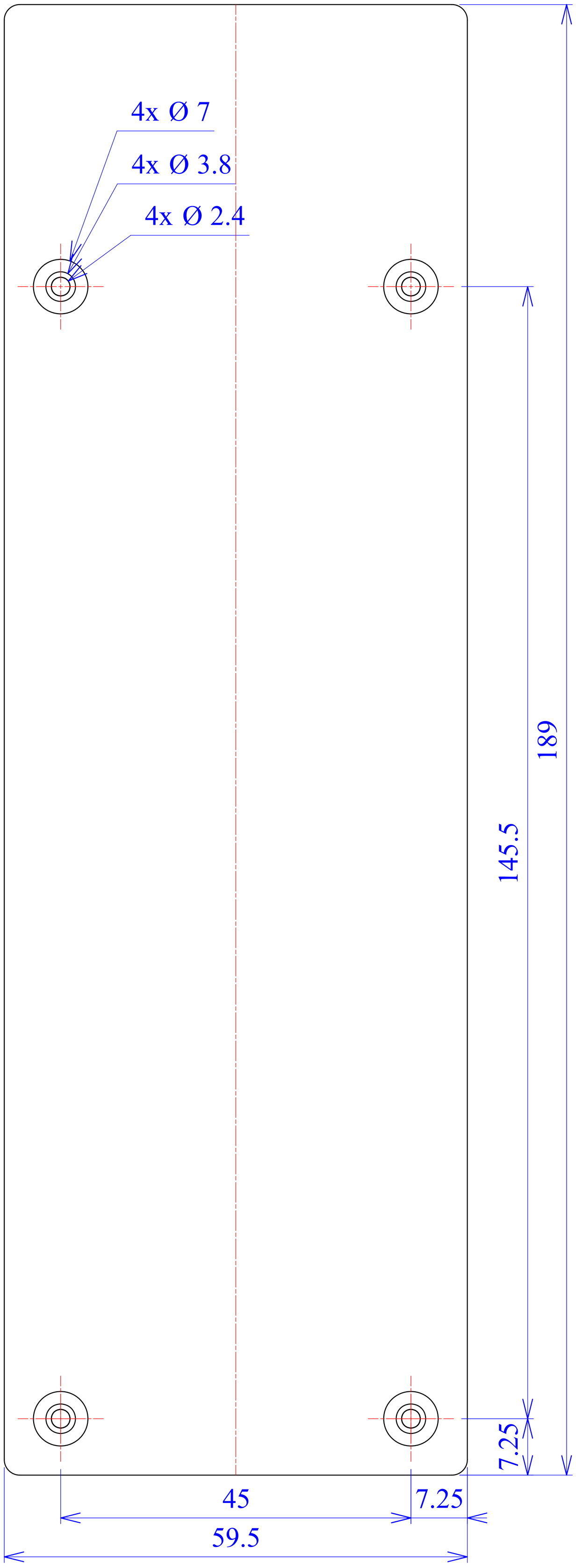
4x Ø 7
4x Ø 3.8
4x Ø 2.4
189
145.5
7.25
45
7.25
59.5

C - C

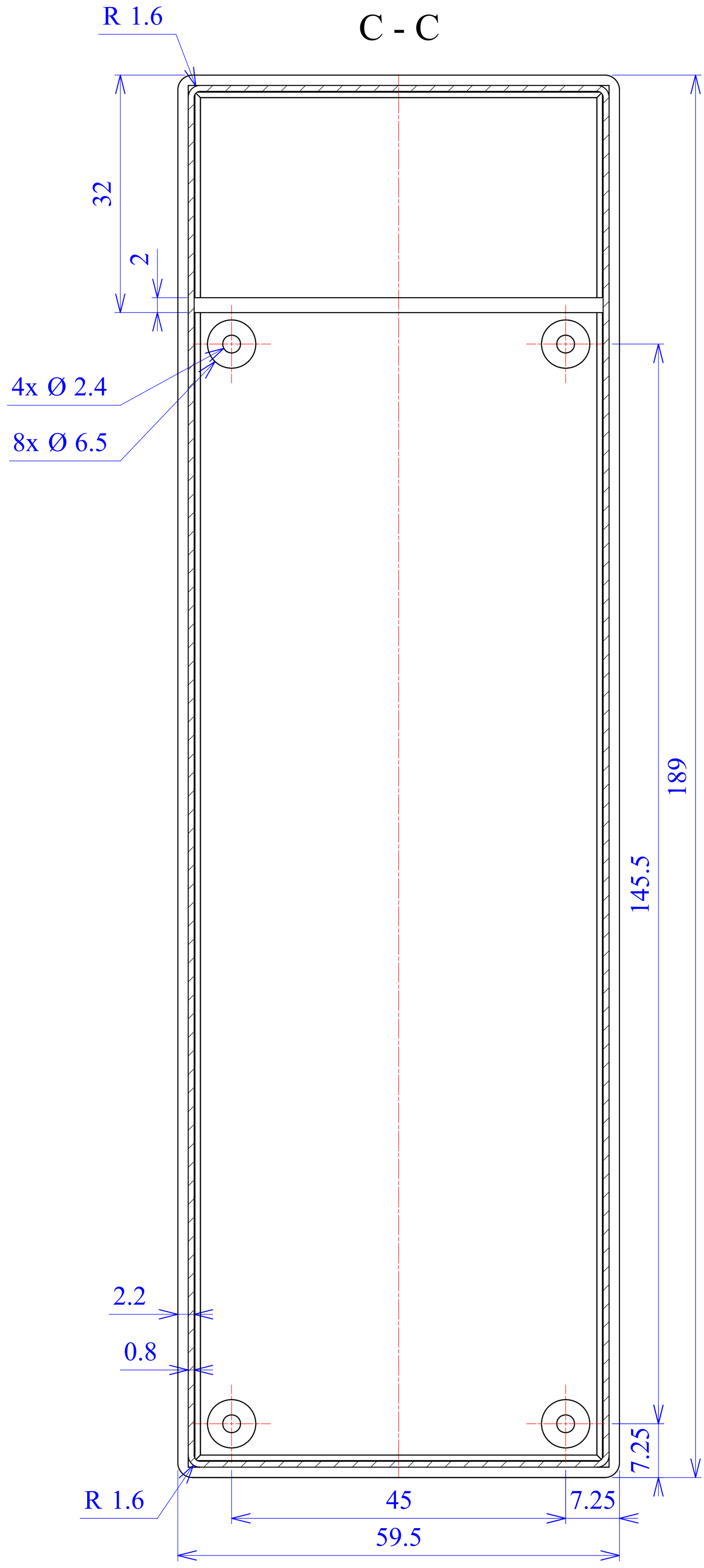

D - D

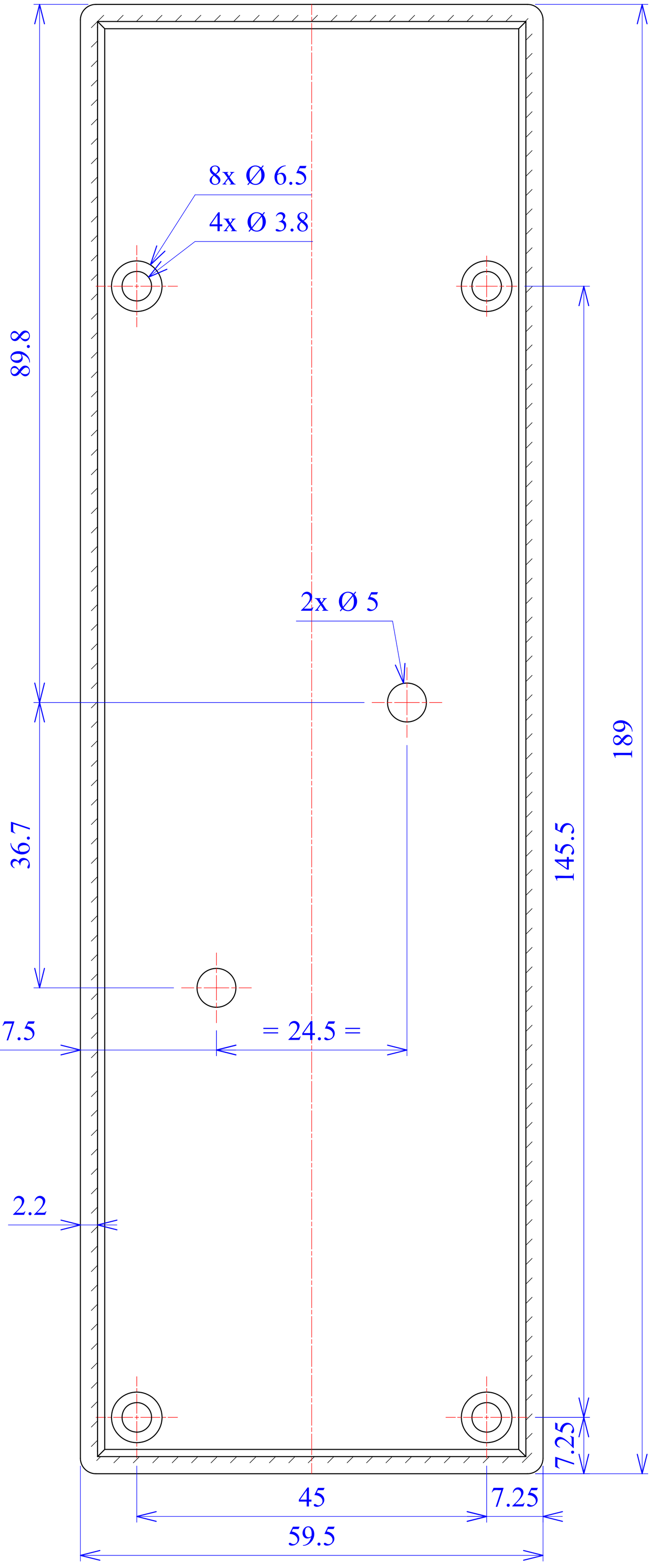

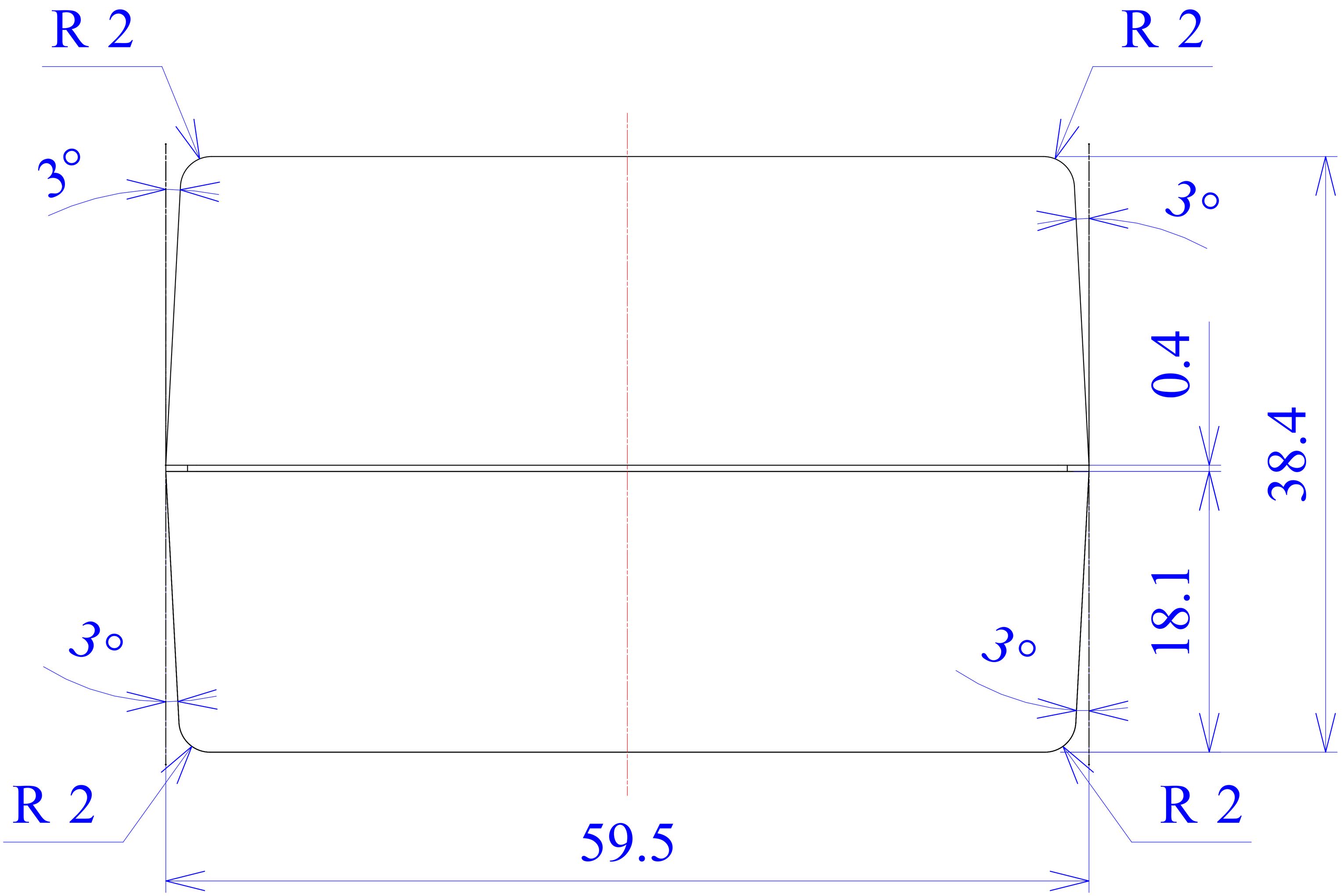
R 2
R 2
3°
3°
0.4
38.4
18.1
3°
3°
R 2
R 2
59.5