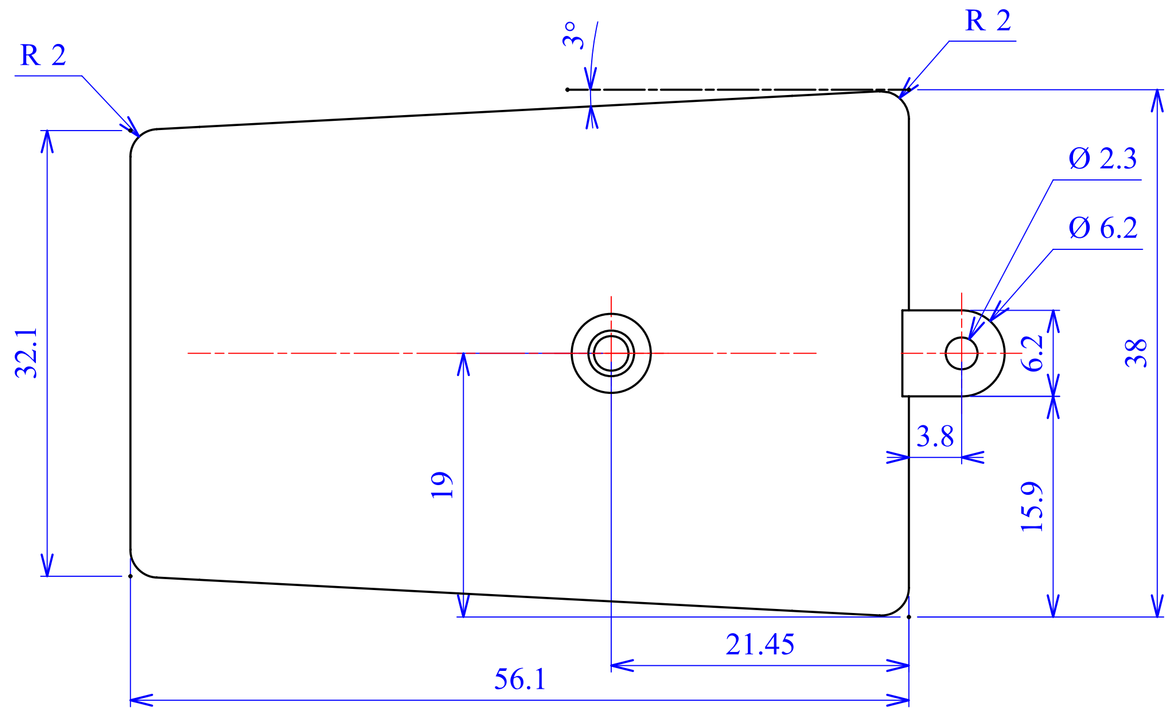

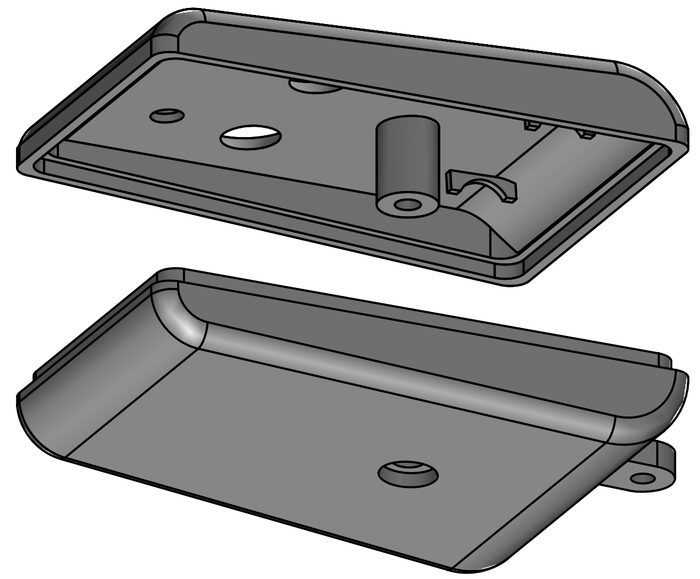

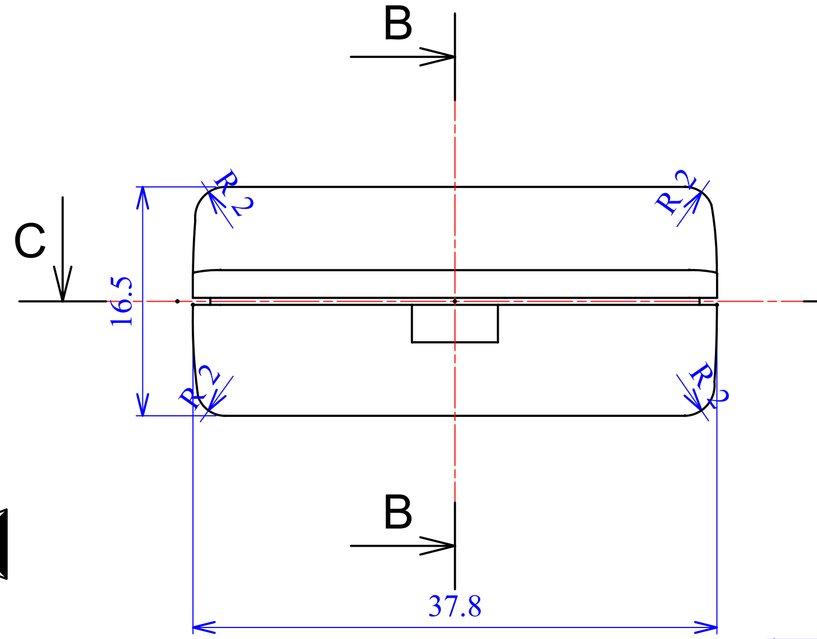

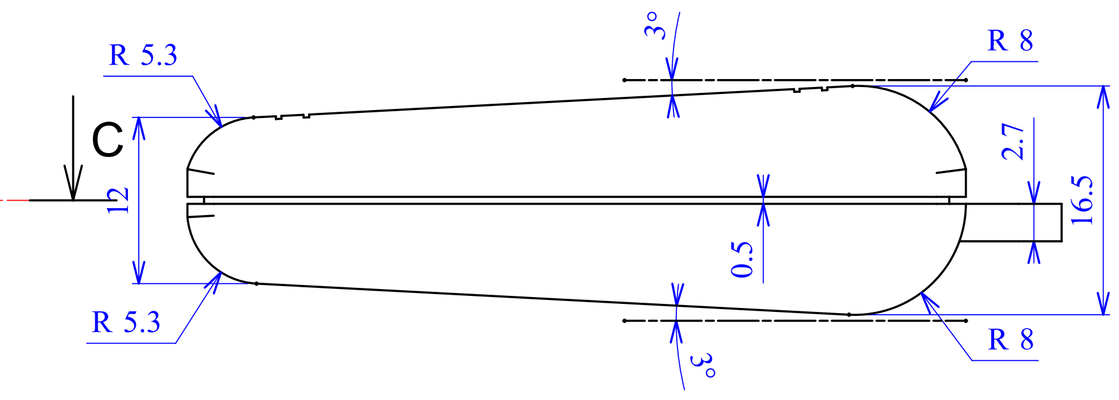

B - B

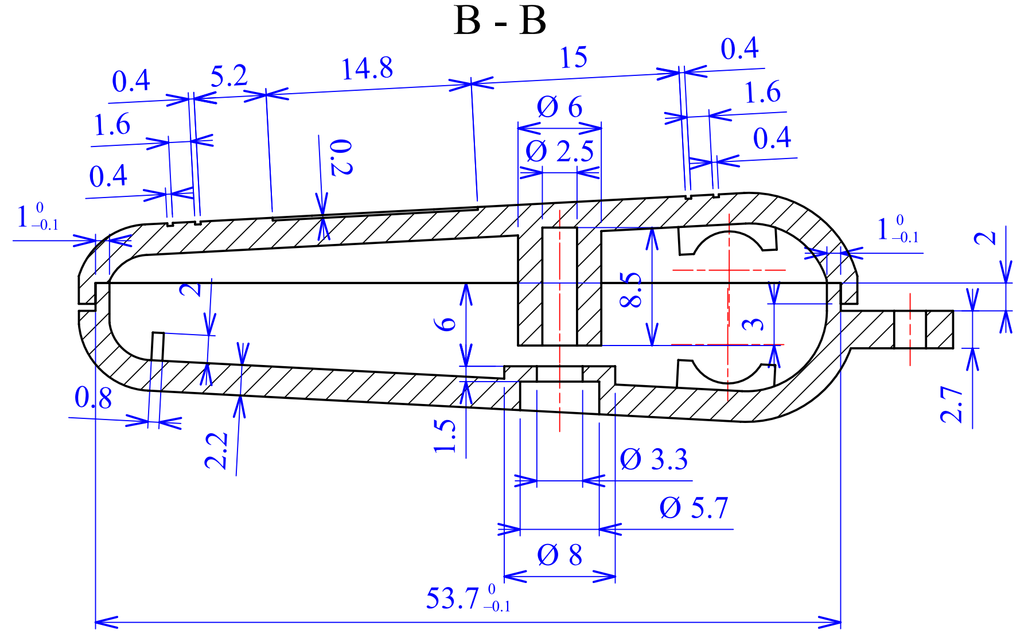

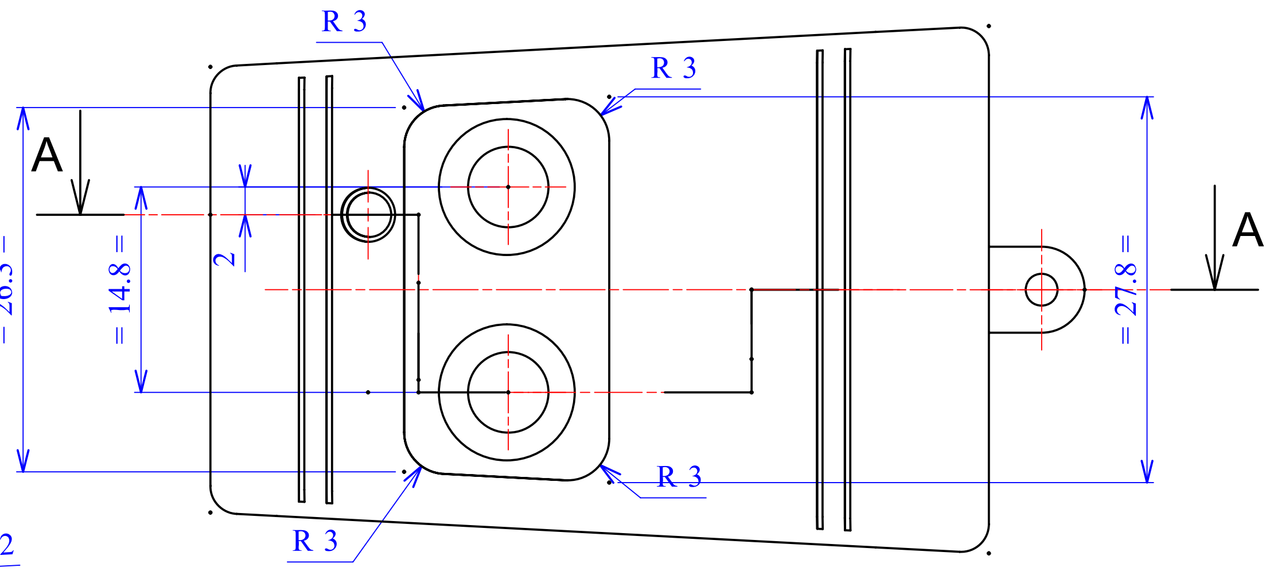

C - C

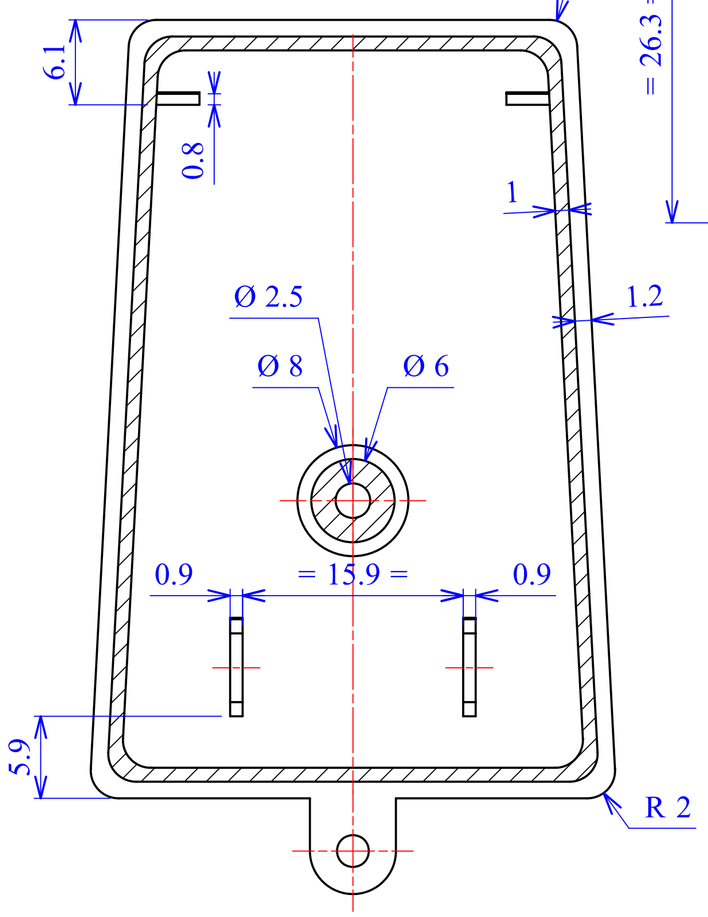

A - A

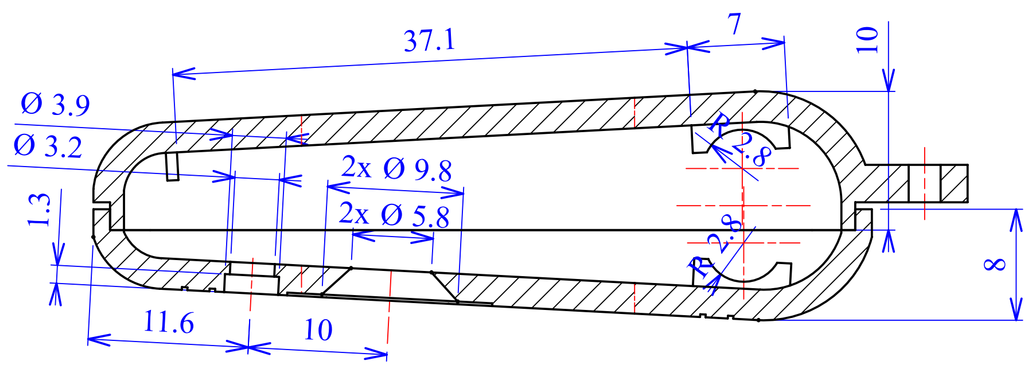

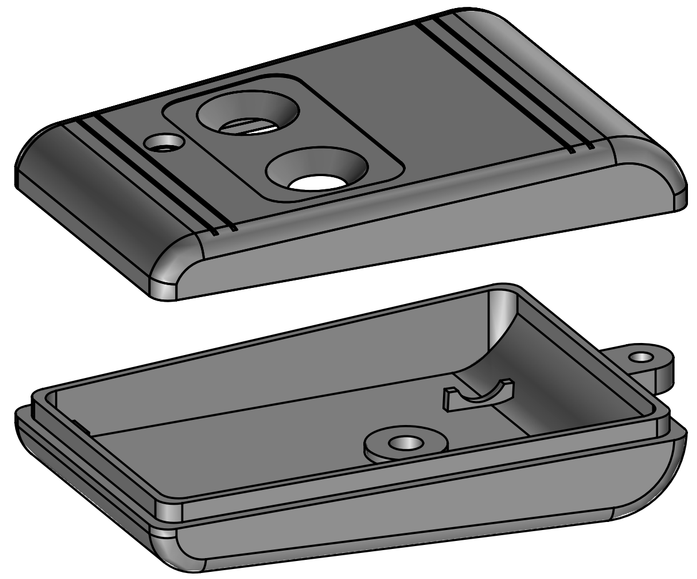

Model produktu	Z-14 B	
Format: A4	Materiał: Polystyrene (PS)	
Skala: 1:1	Tolerancja: +/- 0.1	











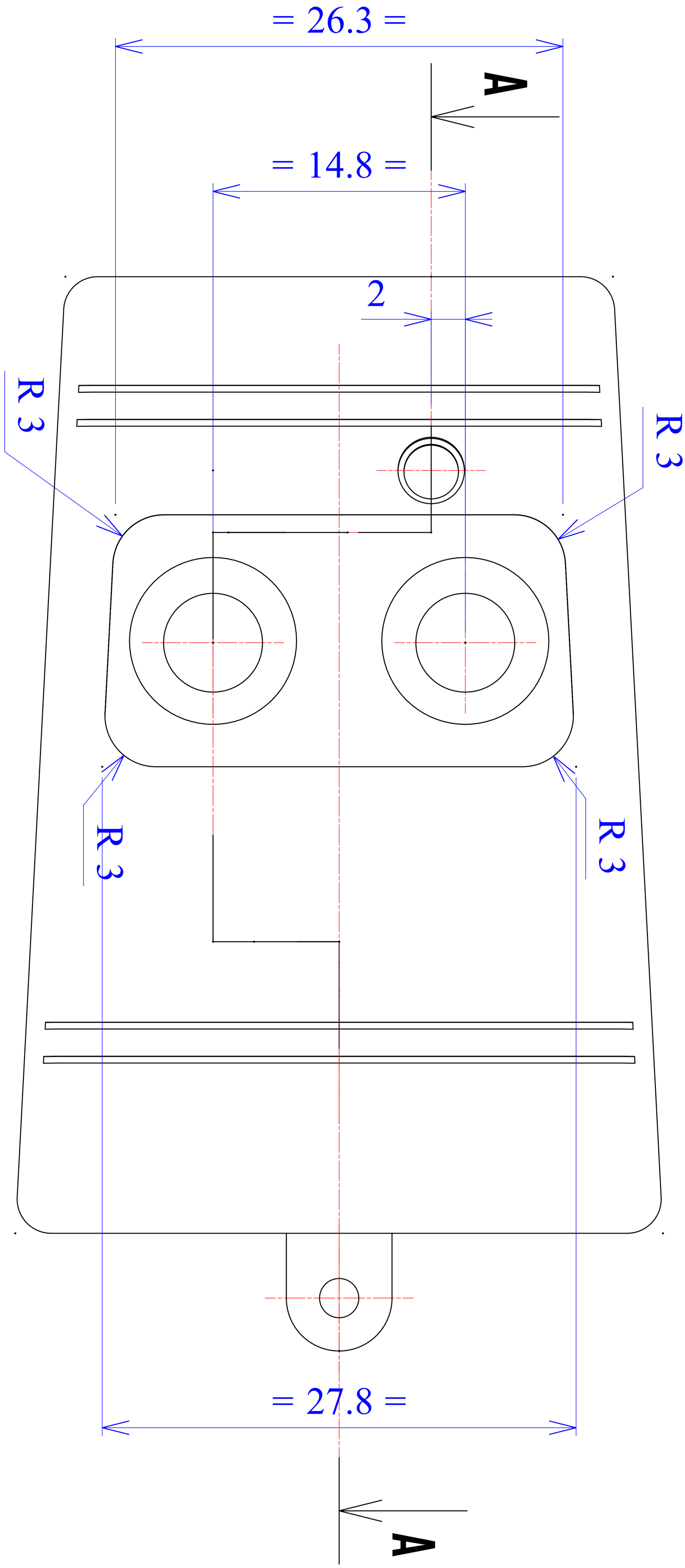
= 26.3 =
A
= 14.8 =
2
R 3
R 3
R 3
R 3
= 27.8 =
A

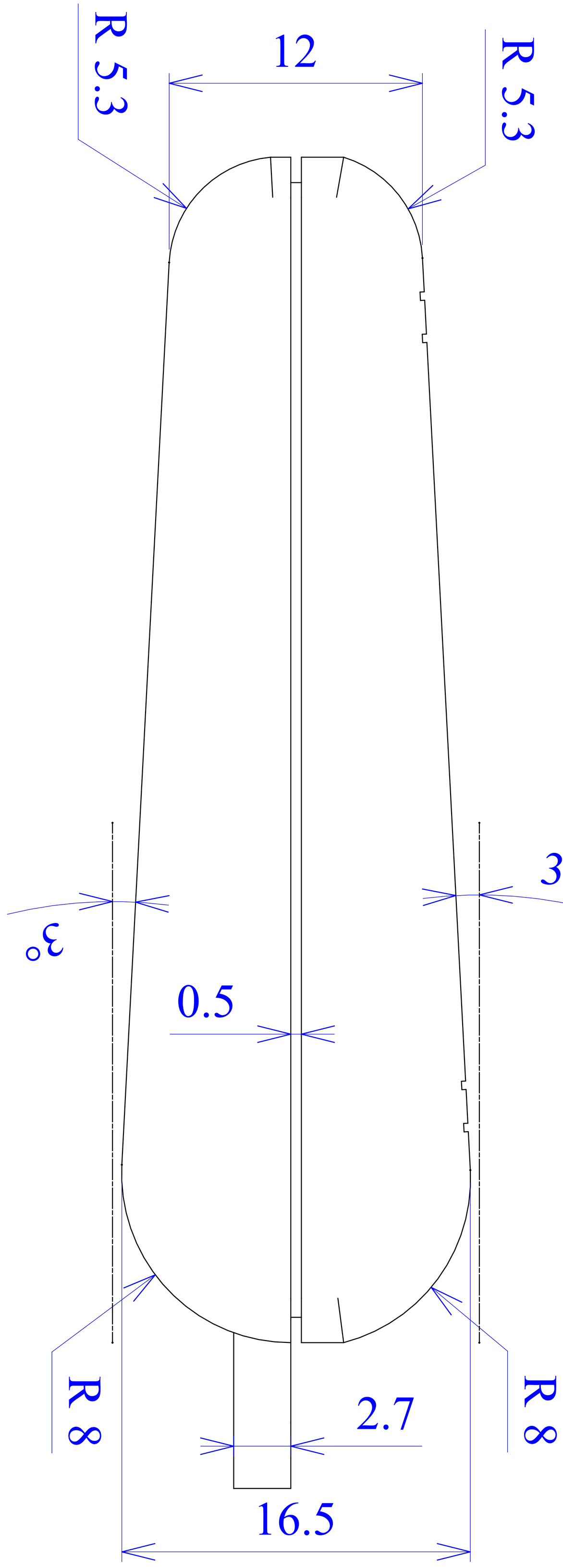
R 5.3
12
R 5.3
3°
3°
0.5
R 8
2.7
R 8
16.5

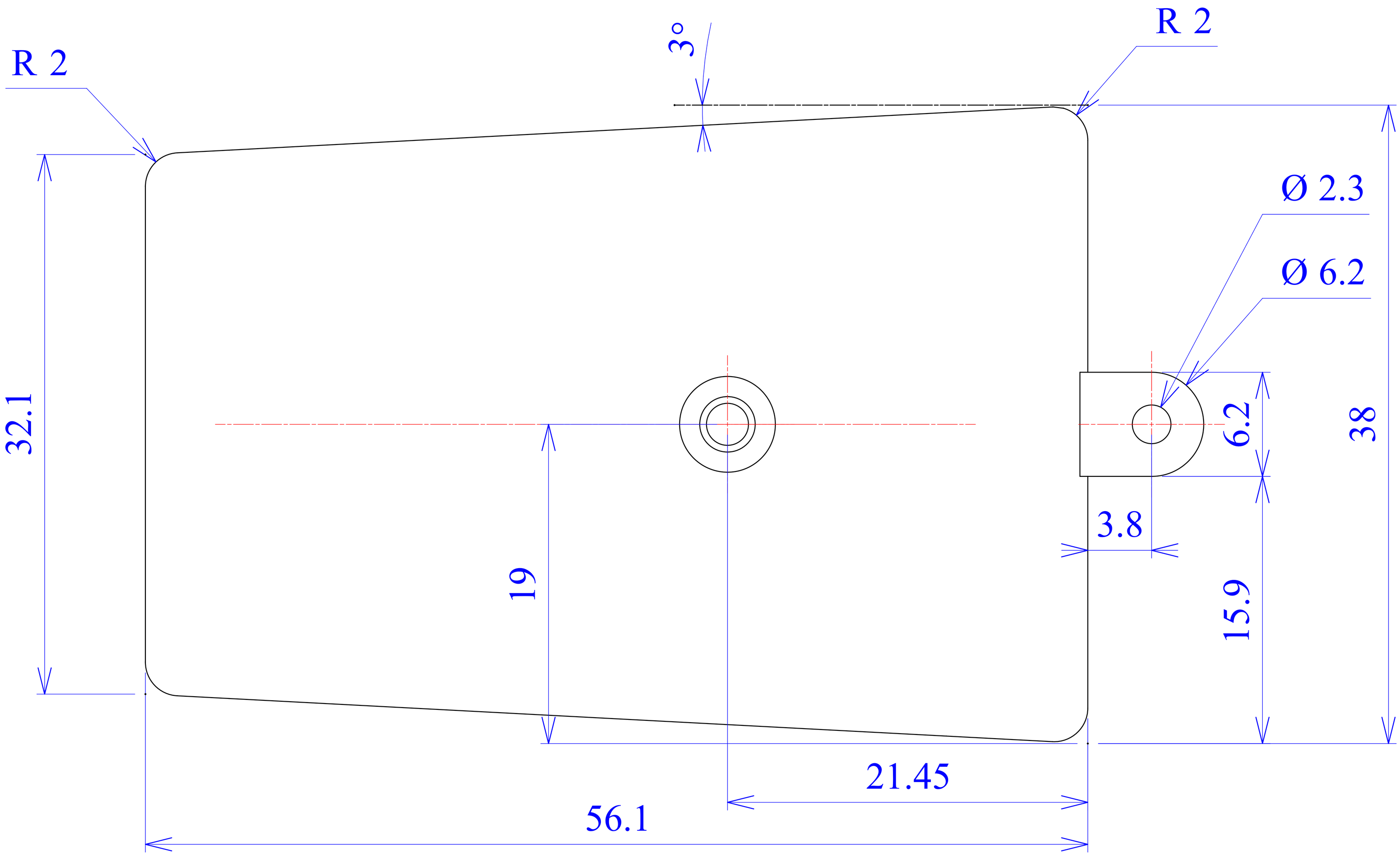
R 2
3°
R 2
Ø 2.3
Ø 6.2
32.1
19
6.2
38
3.8
15.9
21.45
56.1

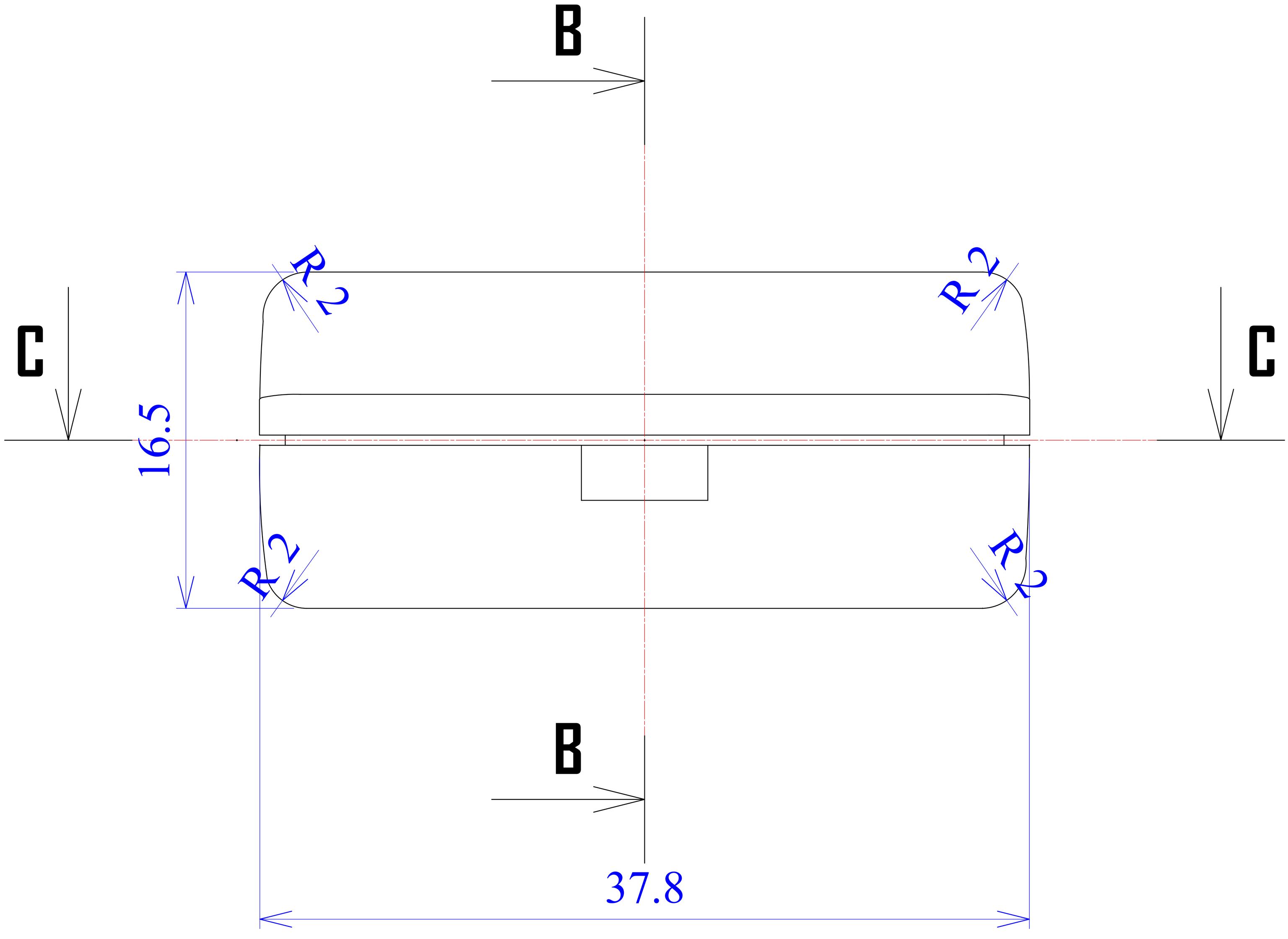
B
C
C
R2
R2
16.5
R2
R2
B
37.8

B - B

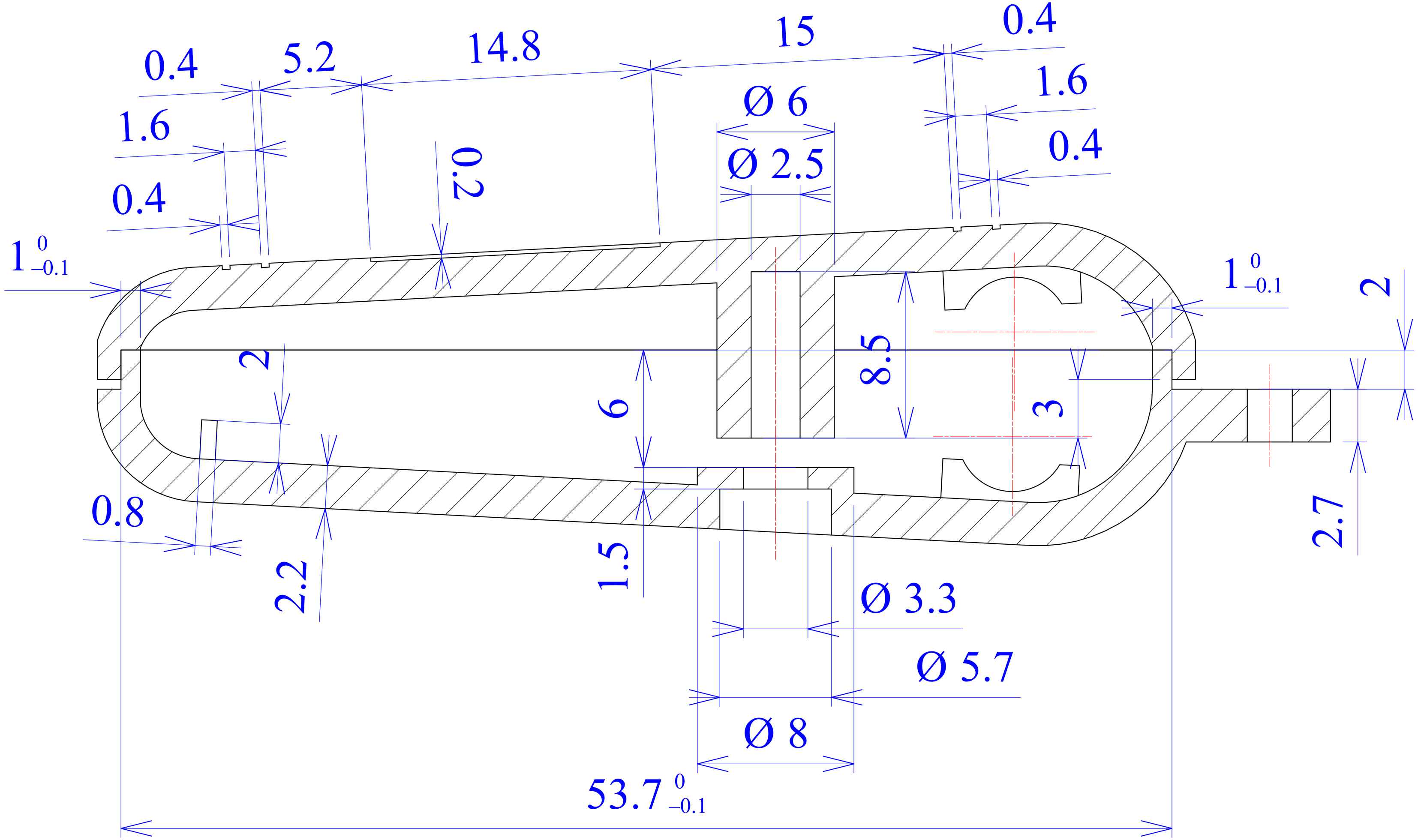
0.4
5.2
14.8
15
0.4
1.6
Ø 6
1.6
0.4
Ø 2.5
0.4
2.0
1 0 −0.1
1 0 −0.1
2
2
8.5
6
3
2.7
0.8
2.2
1.5
Ø 3.3
Ø 5.7
Ø 8
53.7 0 −0.1

C - C

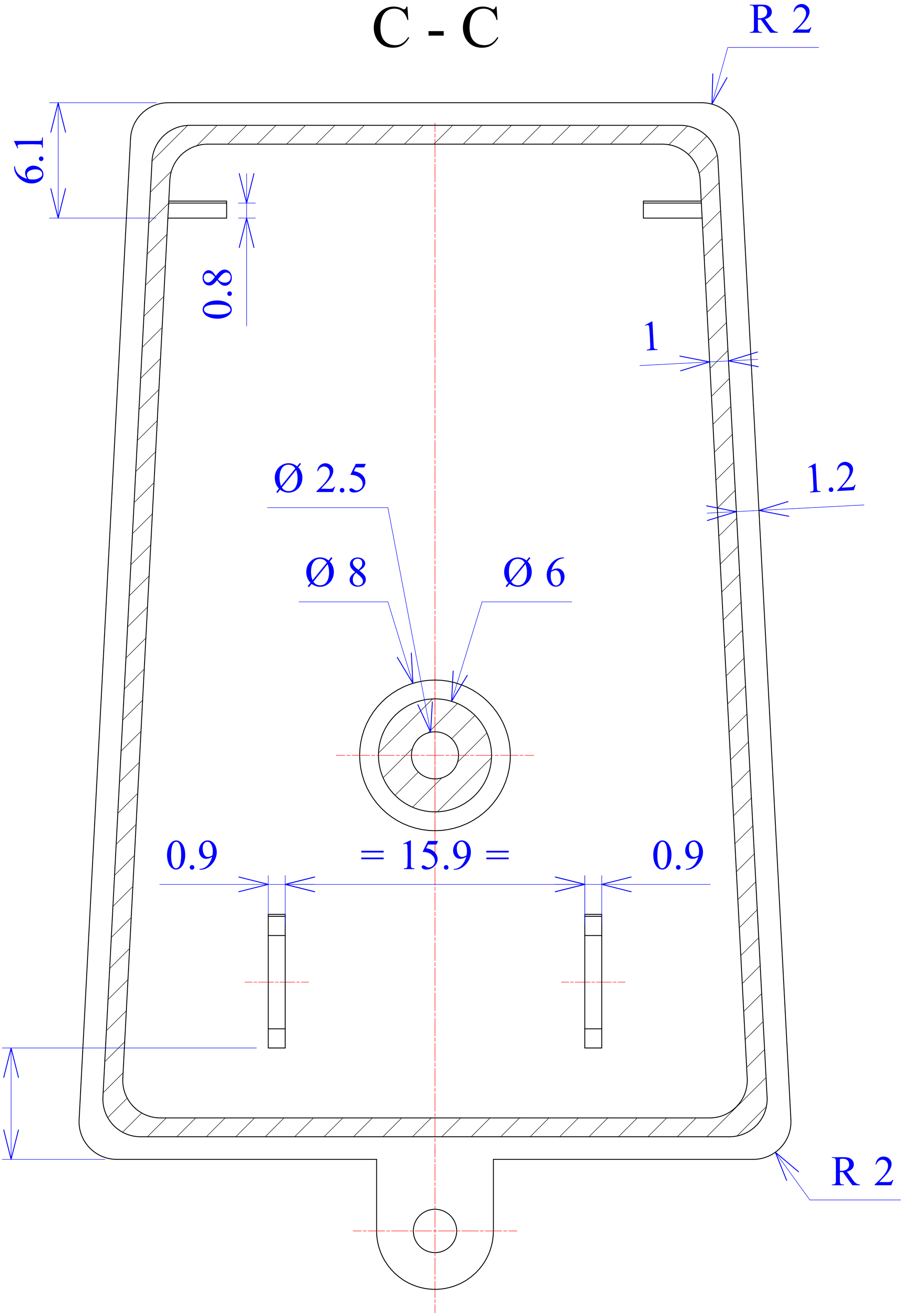

A - A

