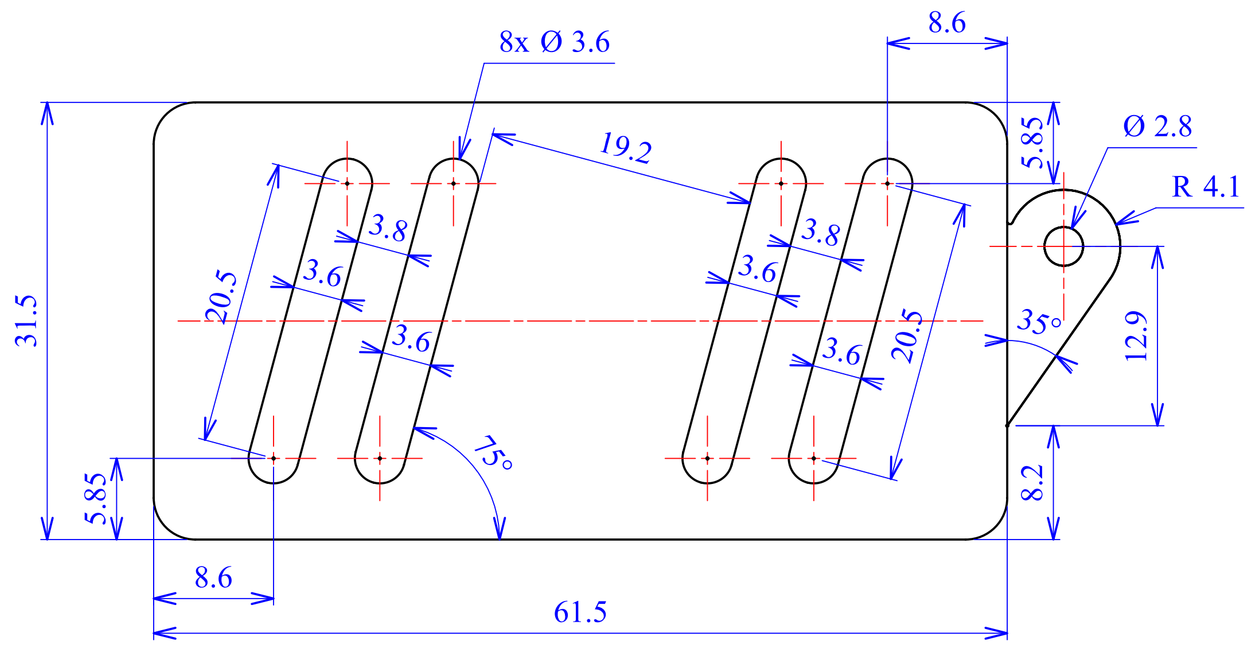

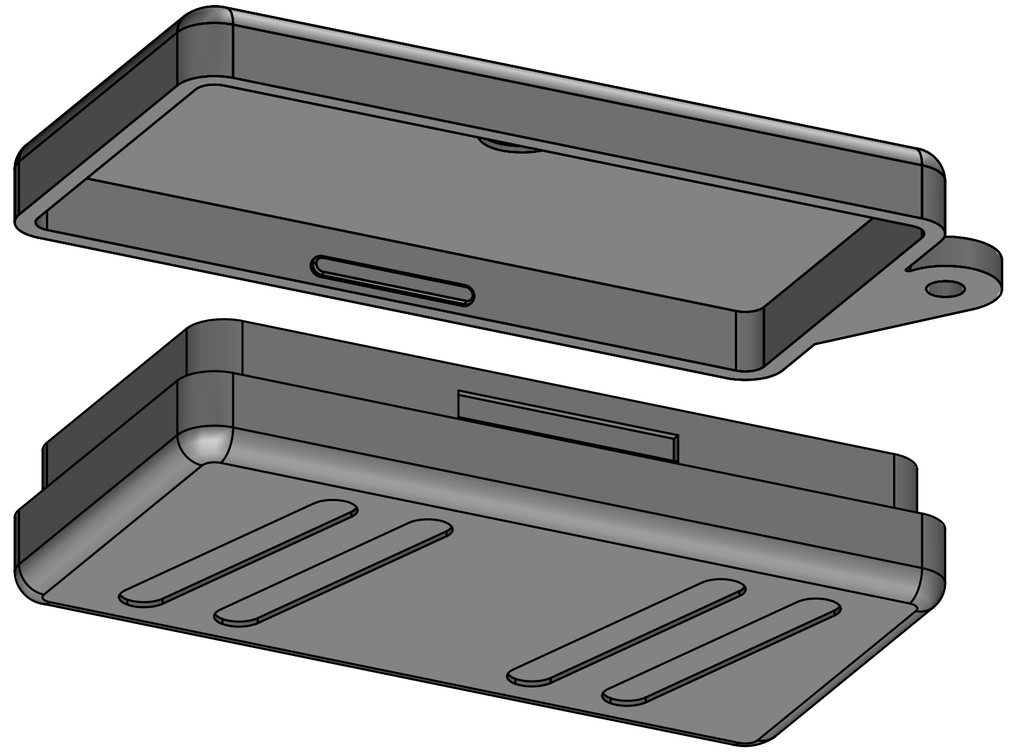

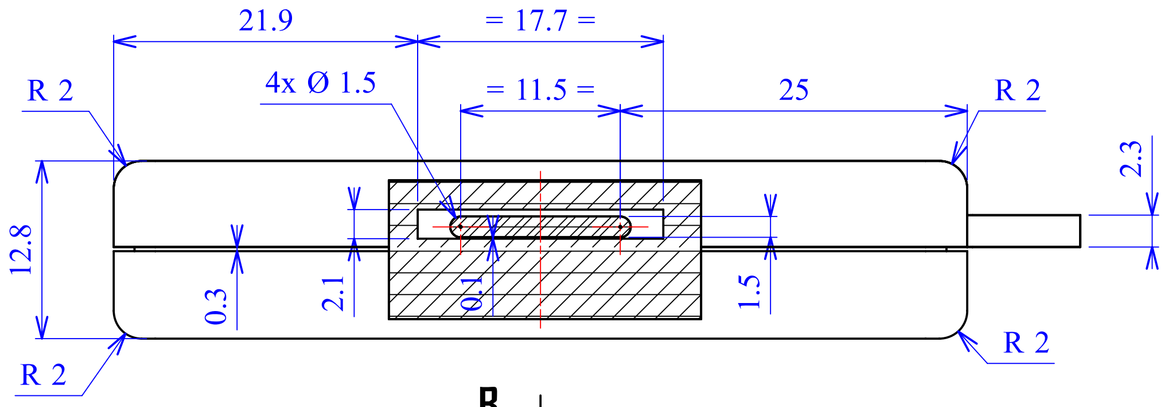

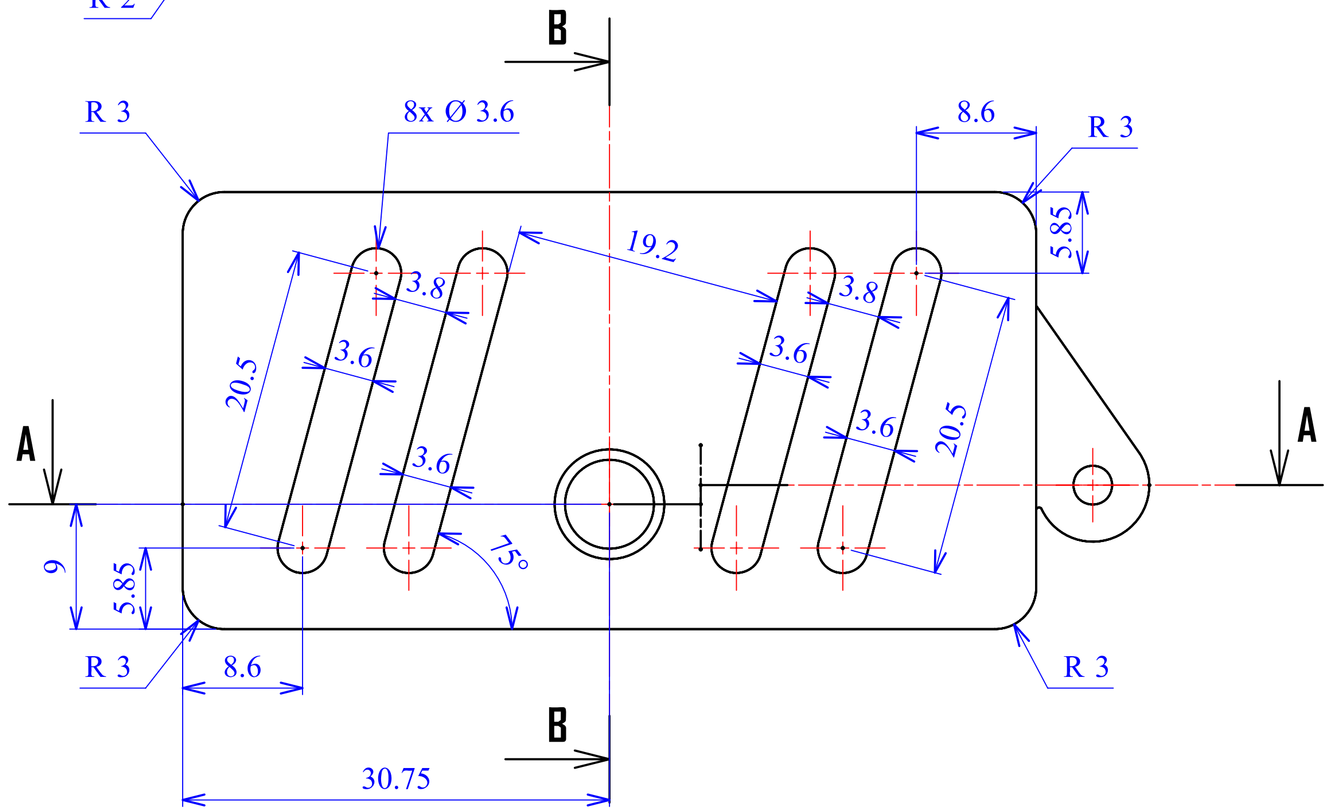

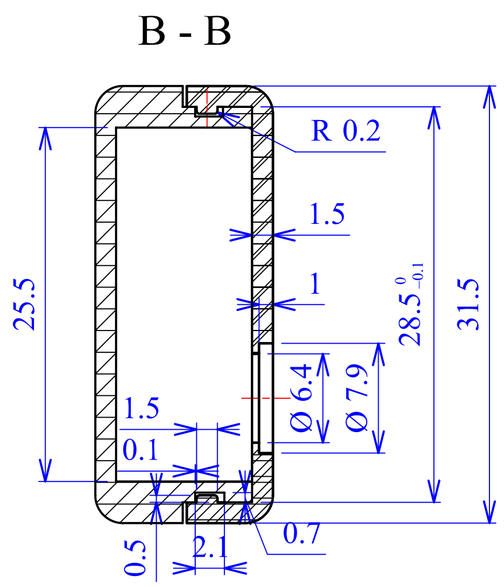

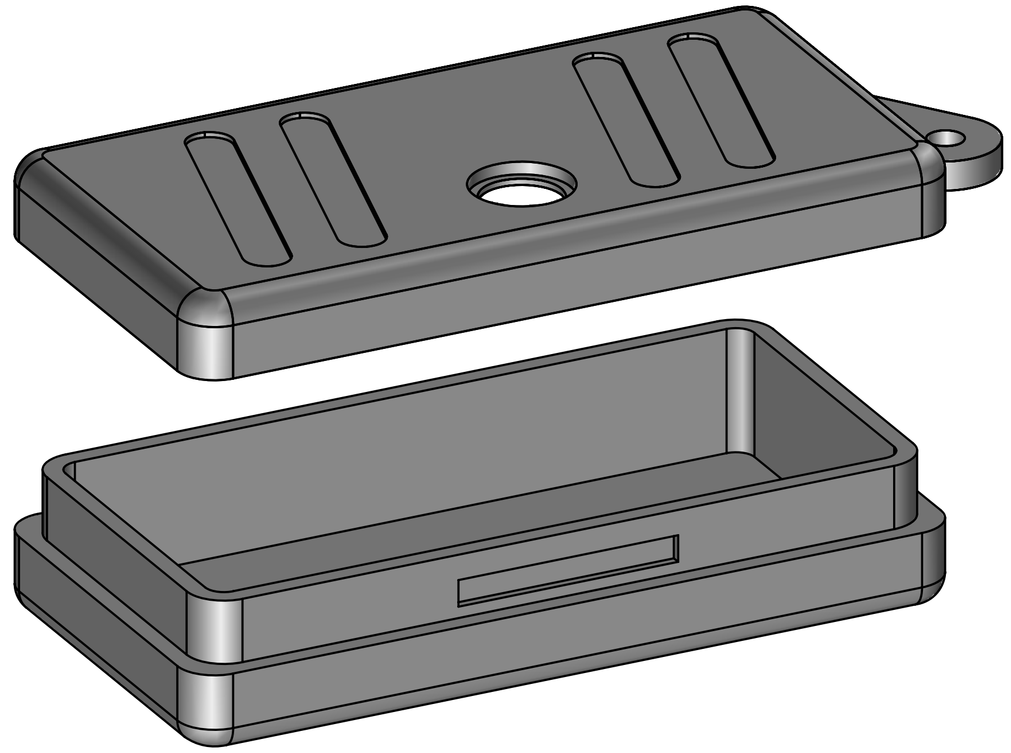

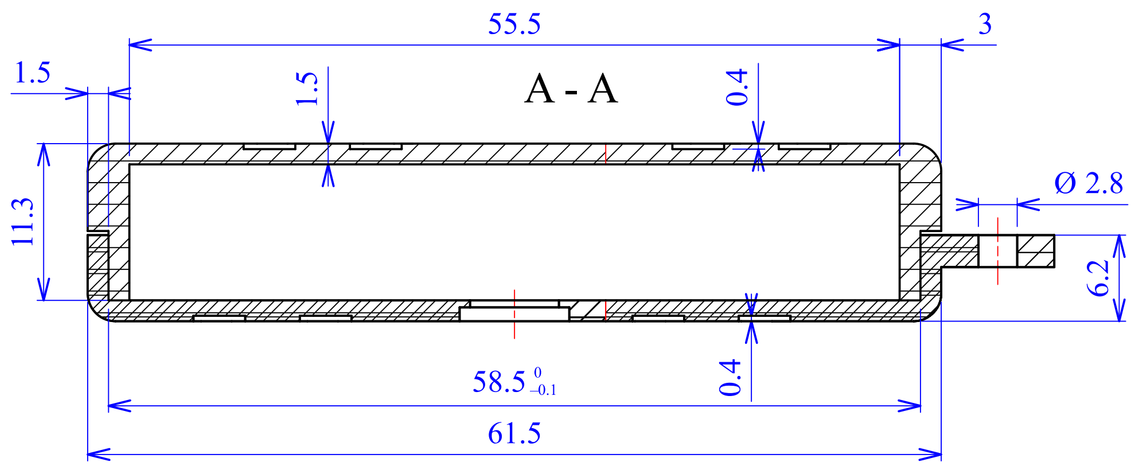

Model produktu	Z-14 A	
Format: A4	Materiał: Polystyrene (PS)	
Skala: 2:1	Tolerancja: +/- 0.1	











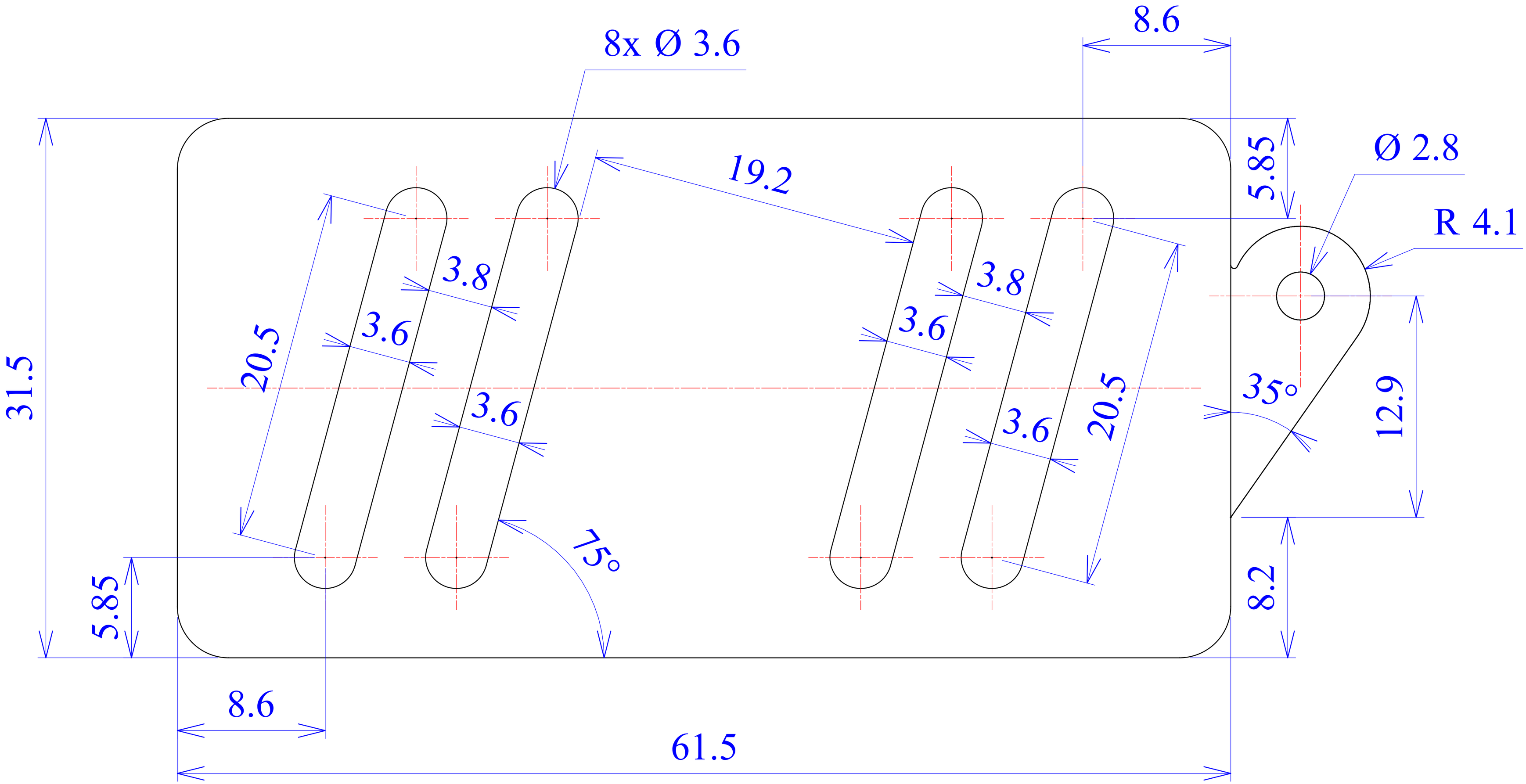
8x Ø 3.6
8.6
19.2
5.85
Ø 2.8
R 4.1
3.8
3.6
20.5
3.8
3.6
20.5
35°
12.9
31.5
3.6
3.6
75°
5.85
8.2
8.6
61.5

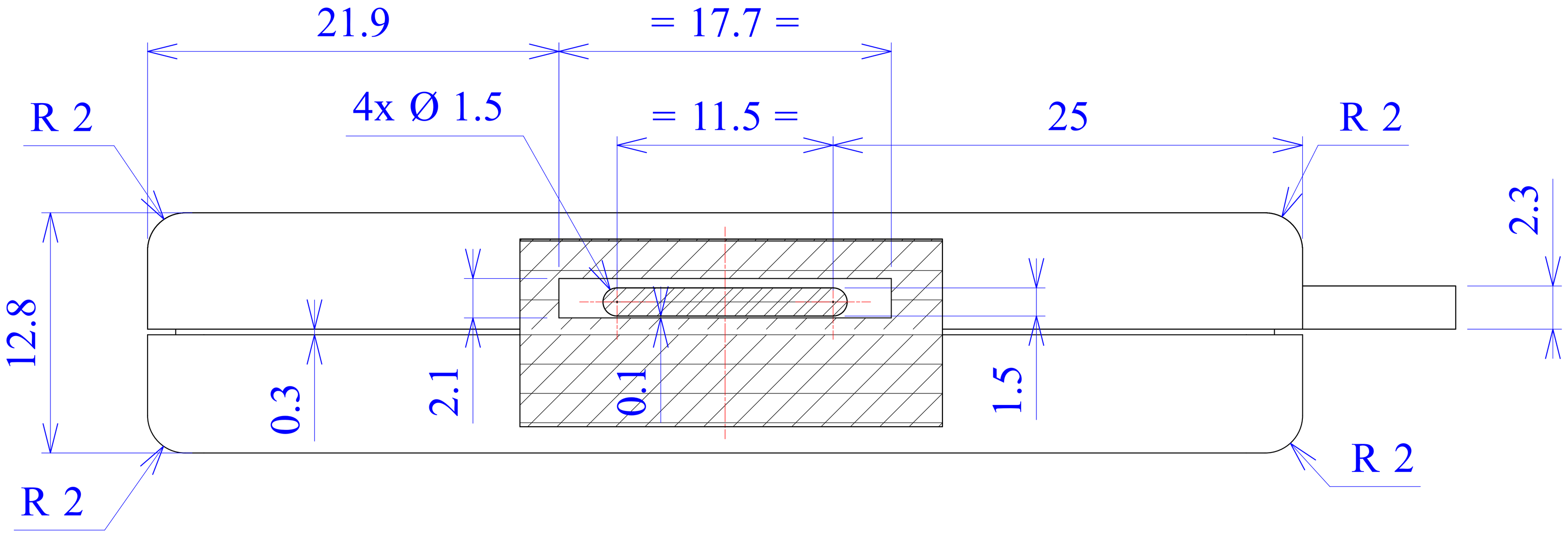
21.9
= 17.7 =
R 2
4x Ø 1.5
= 11.5 =
25
R 2
2.3
12.8
0.3
2.1
0.1
1.5
R 2
R 2

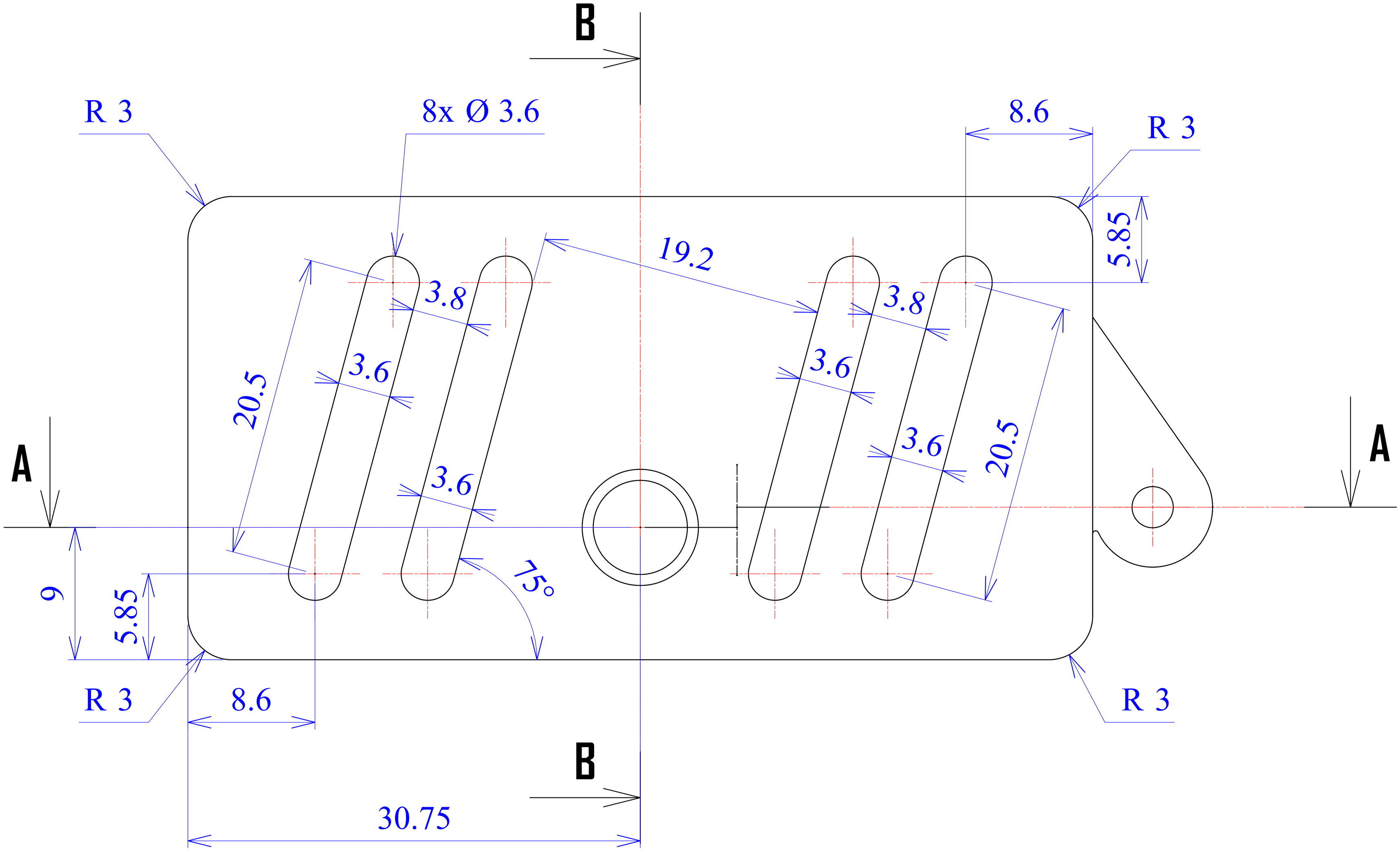
B
R 3
8x Ø 3.6
8.6
R 3
5.85
19.2
3.8
3.6
20.5
3.6
3.8
3.6
20.5
A
A
9
5.85
75°
R 3
8.6
R 3
B
30.75

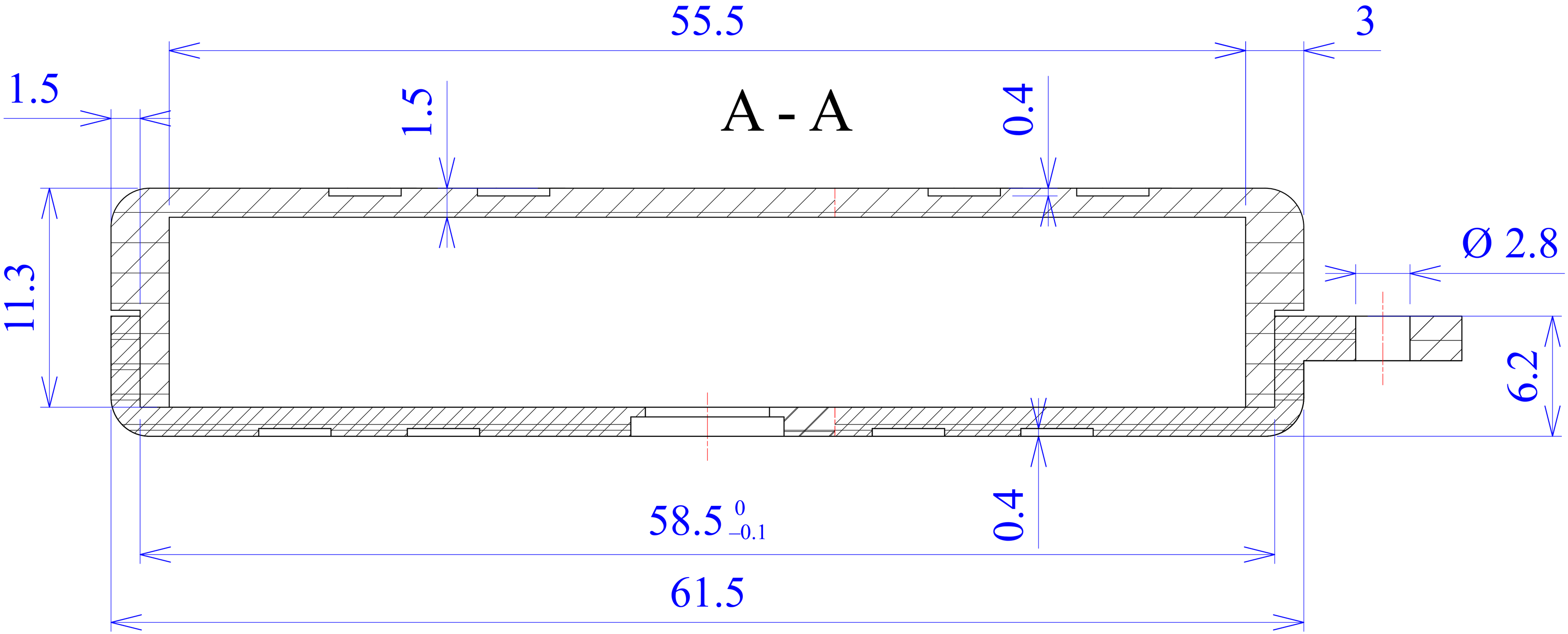
55.5
3
1.5
1.5
A - A
0.4
Ø 2.8
11.3
6.2
58.5 0 −0.1
0.4
61.5

B - B

