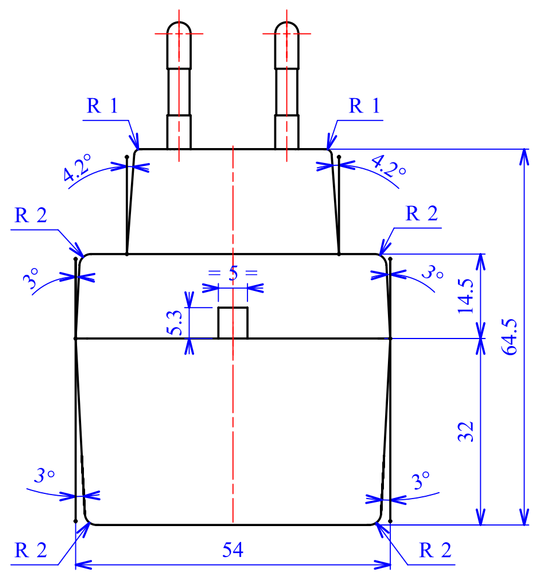

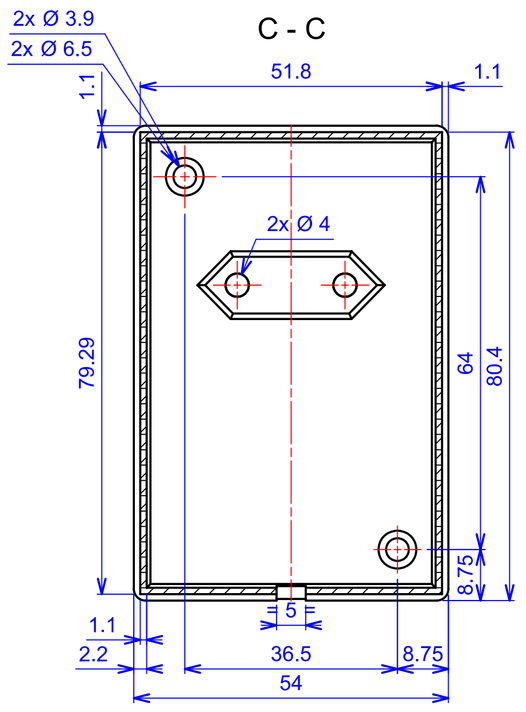

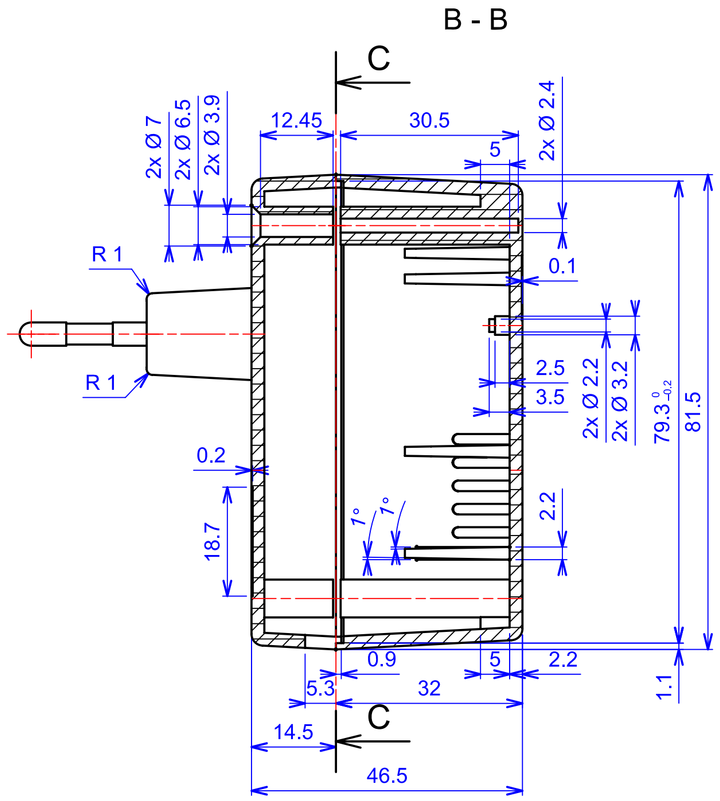

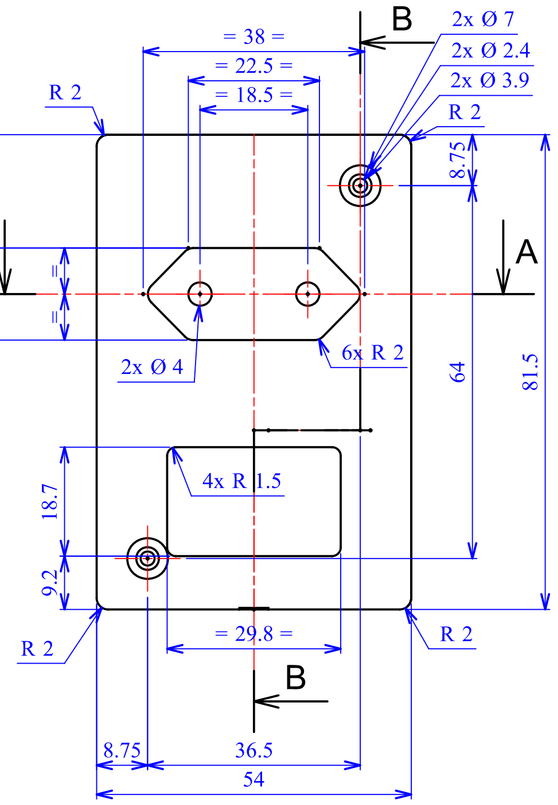

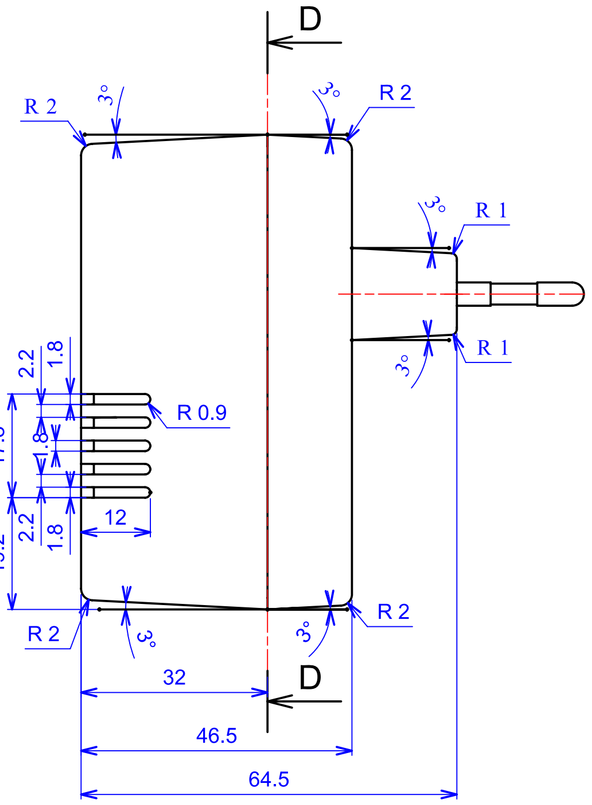

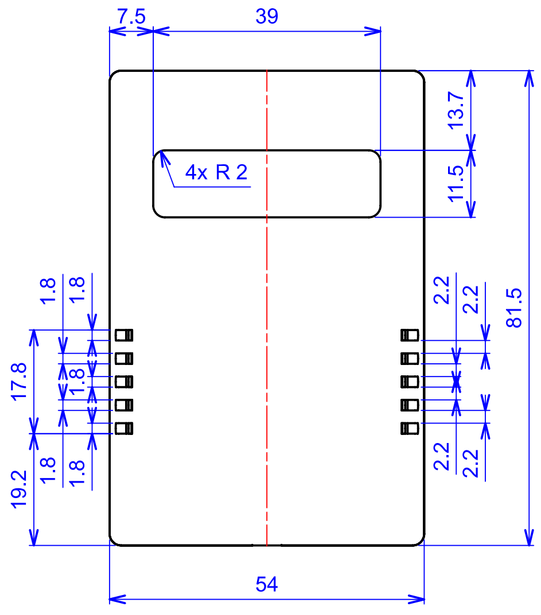

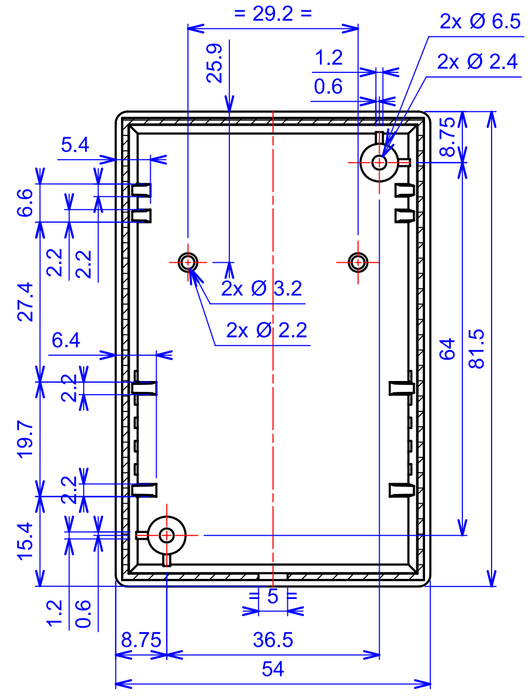

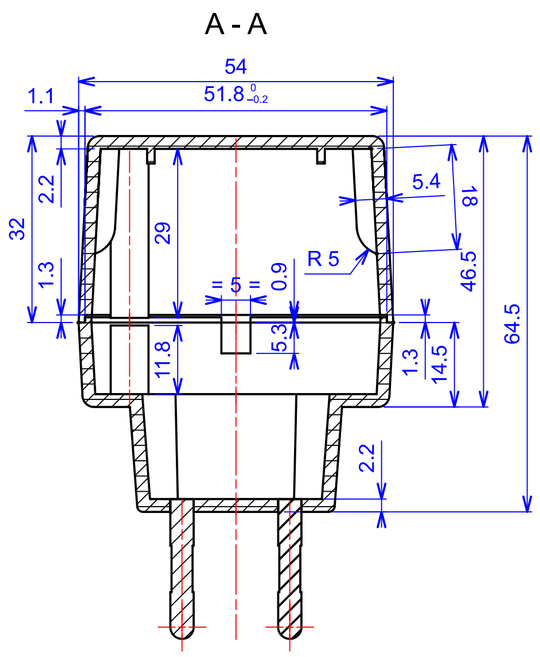

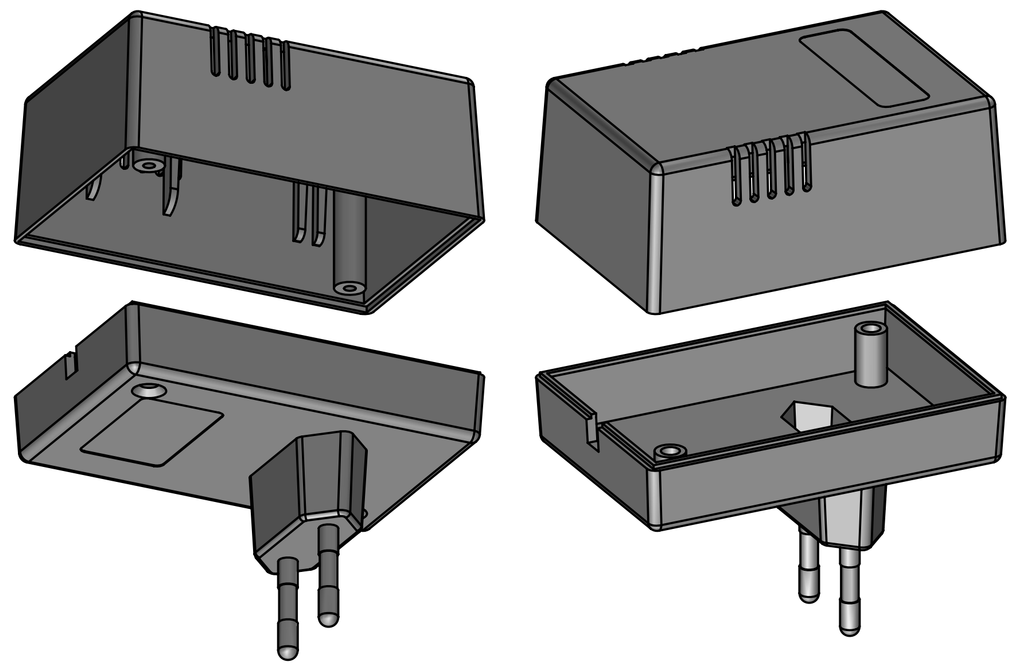

Model produktu	Z-10 A	
Format: A4	Materiał: Polystyrene (PS)	
Skala: 1:1	Tolerancja: +/- 0.1	

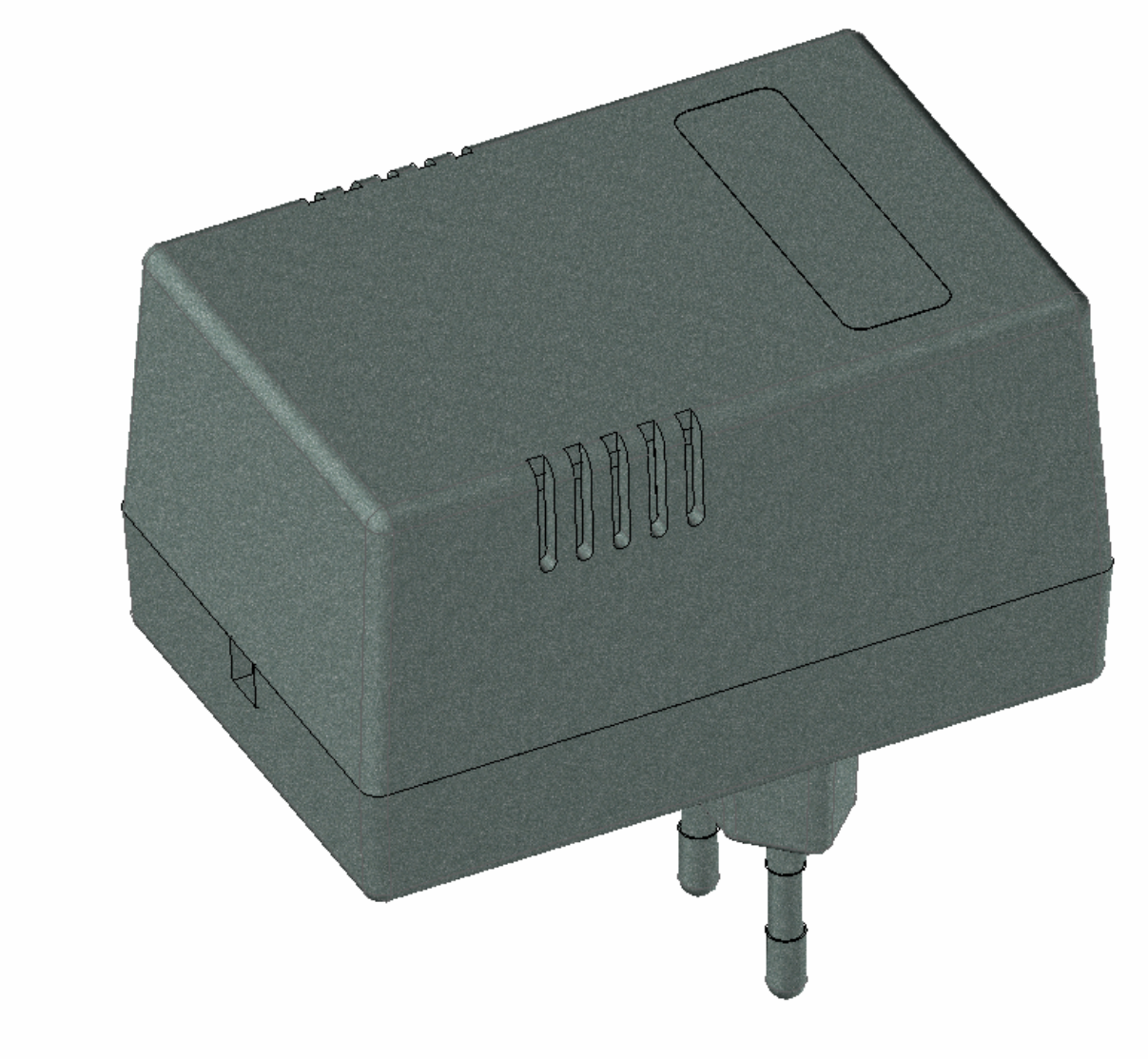

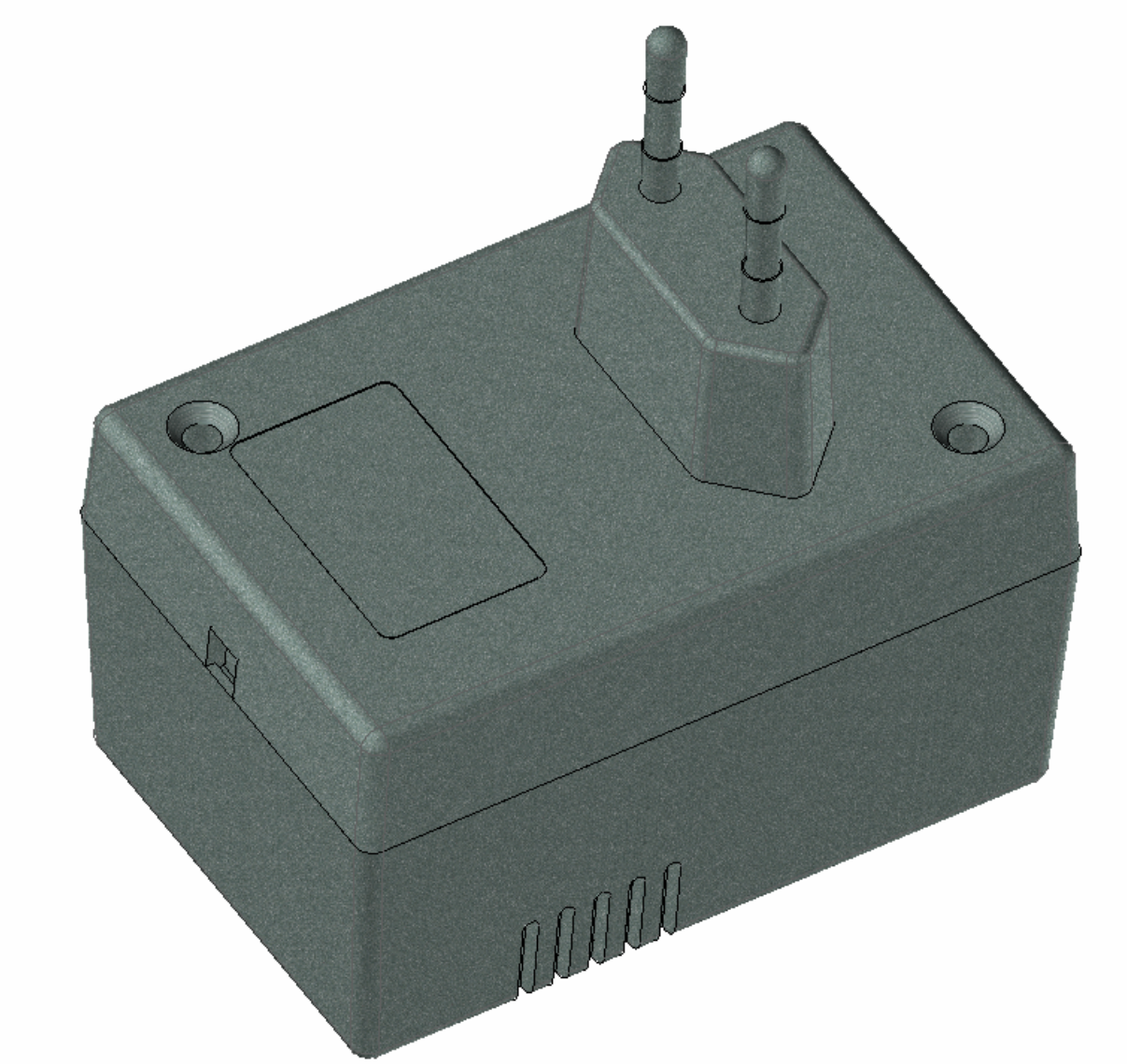

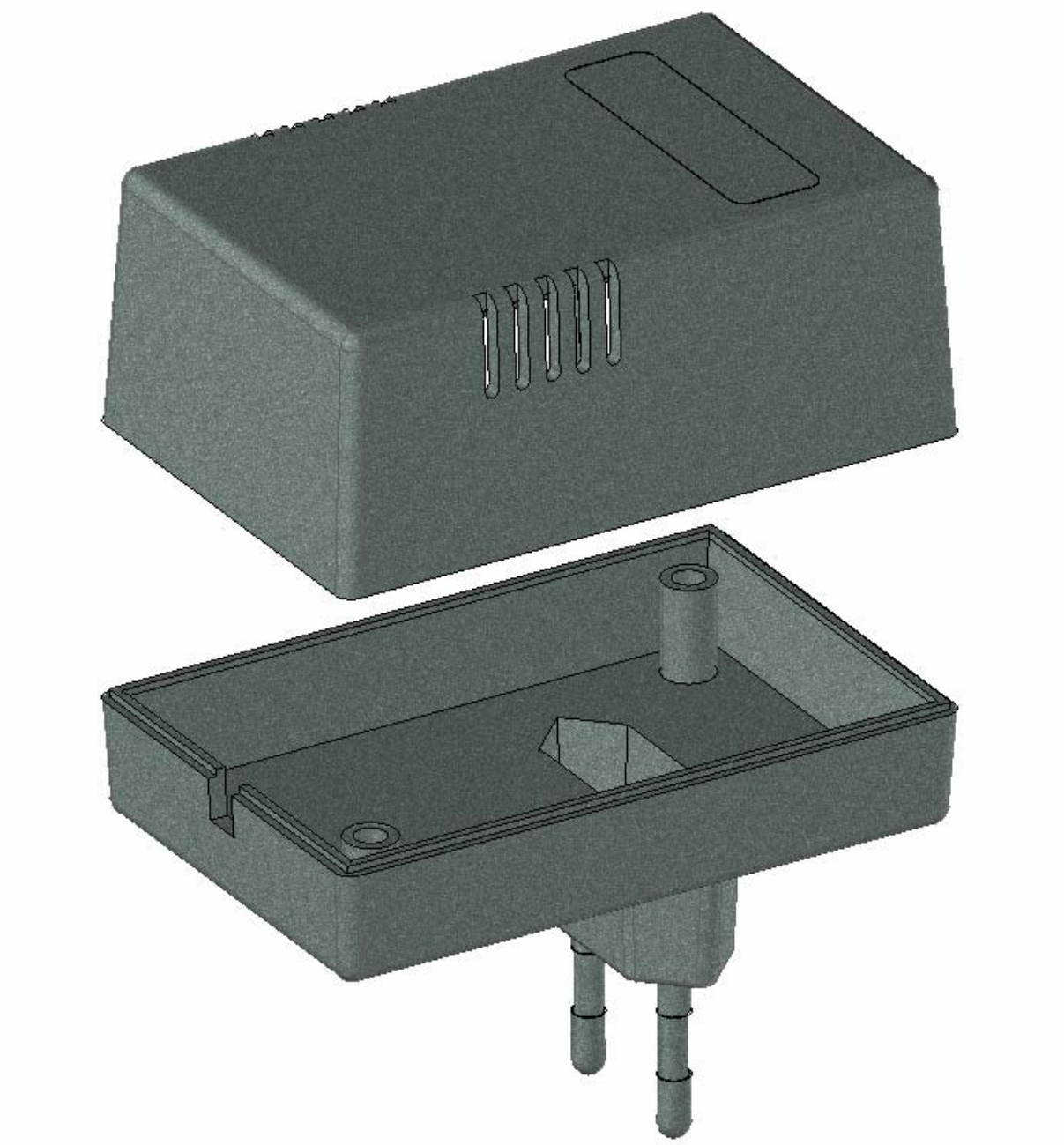

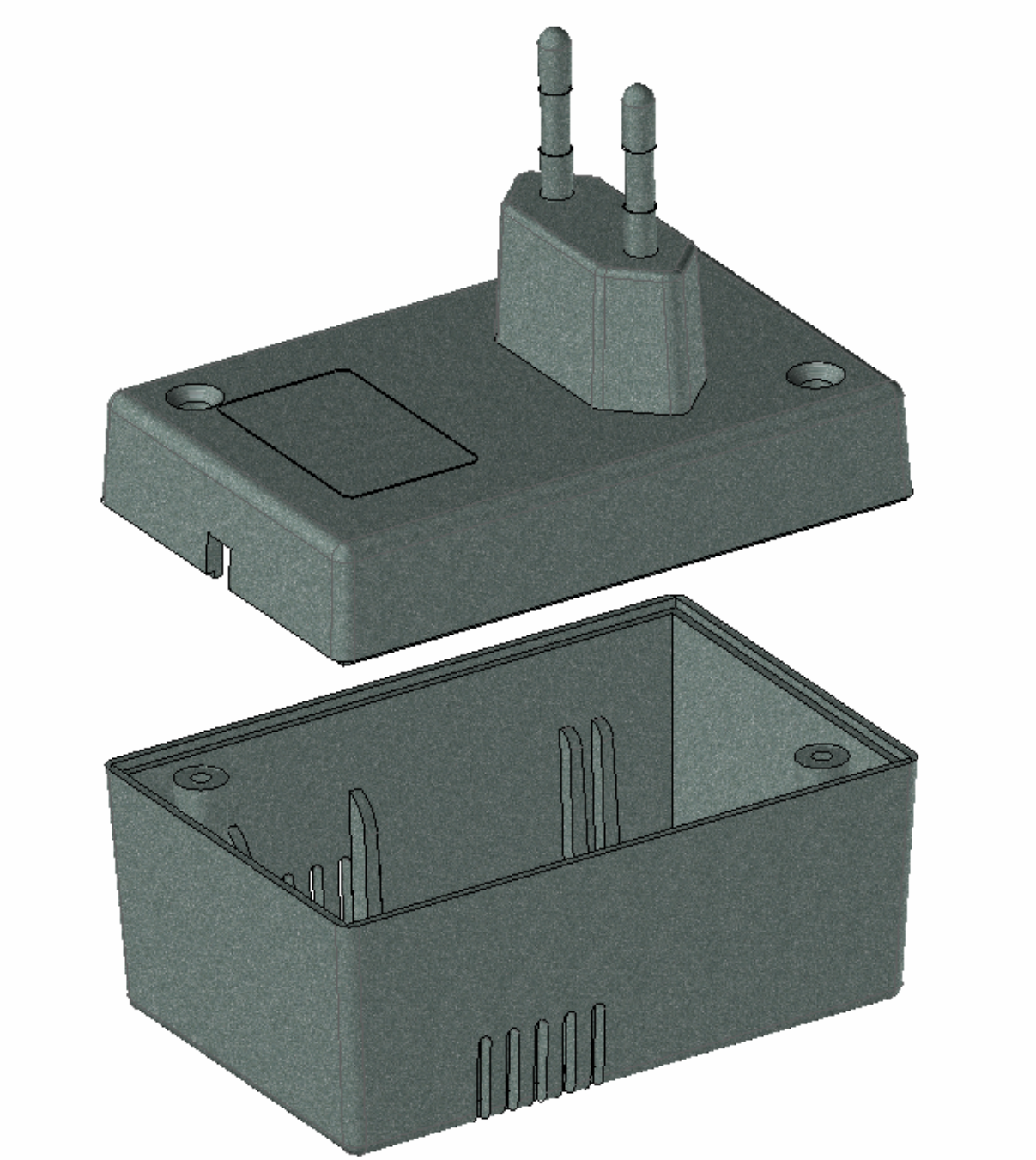

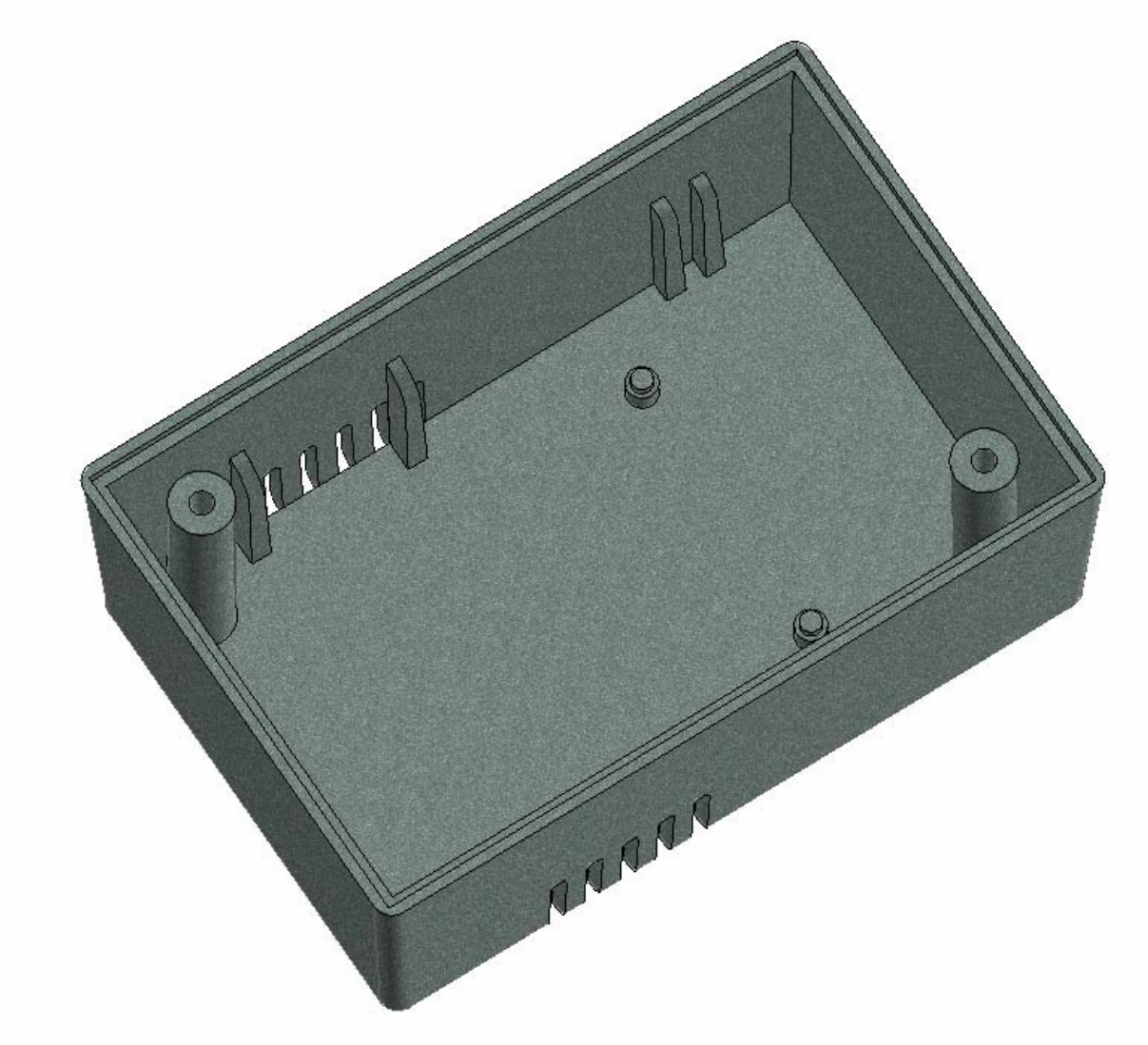

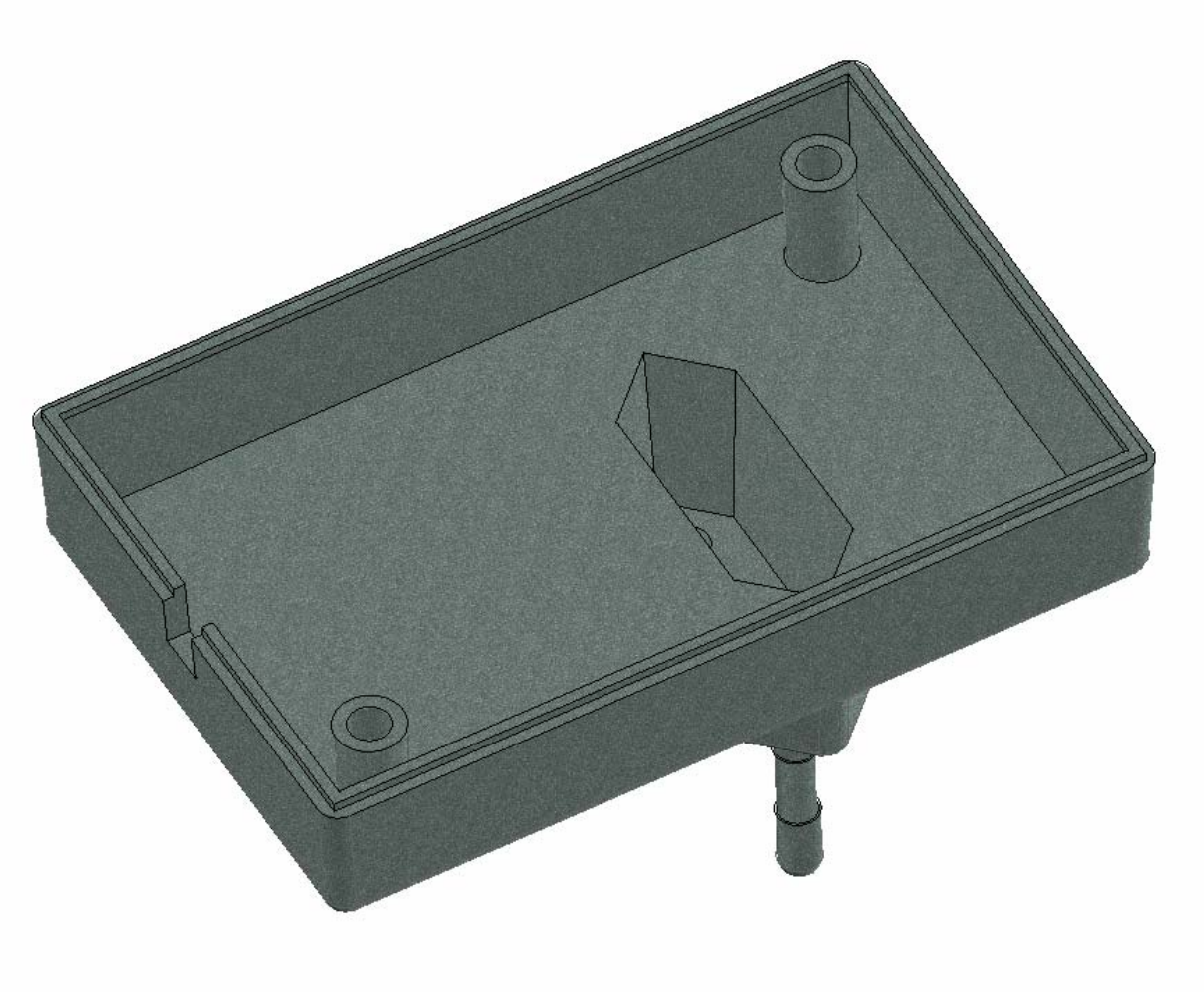

B - B

C

2x Ø 7

2x Ø 6.5

2x Ø 3.9

12.45

30.5

5

2x Ø 2.4

R 1

R 1

0.1

2.5

3.5

2x Ø 2.2

2x Ø 3.2

$79.3^{\ 0}_{-0.2}$

81.5

0.2

18.7

1°

1°

2.2

0.9

5

2.2

1.1

5.3

32

C

14.5

46.5

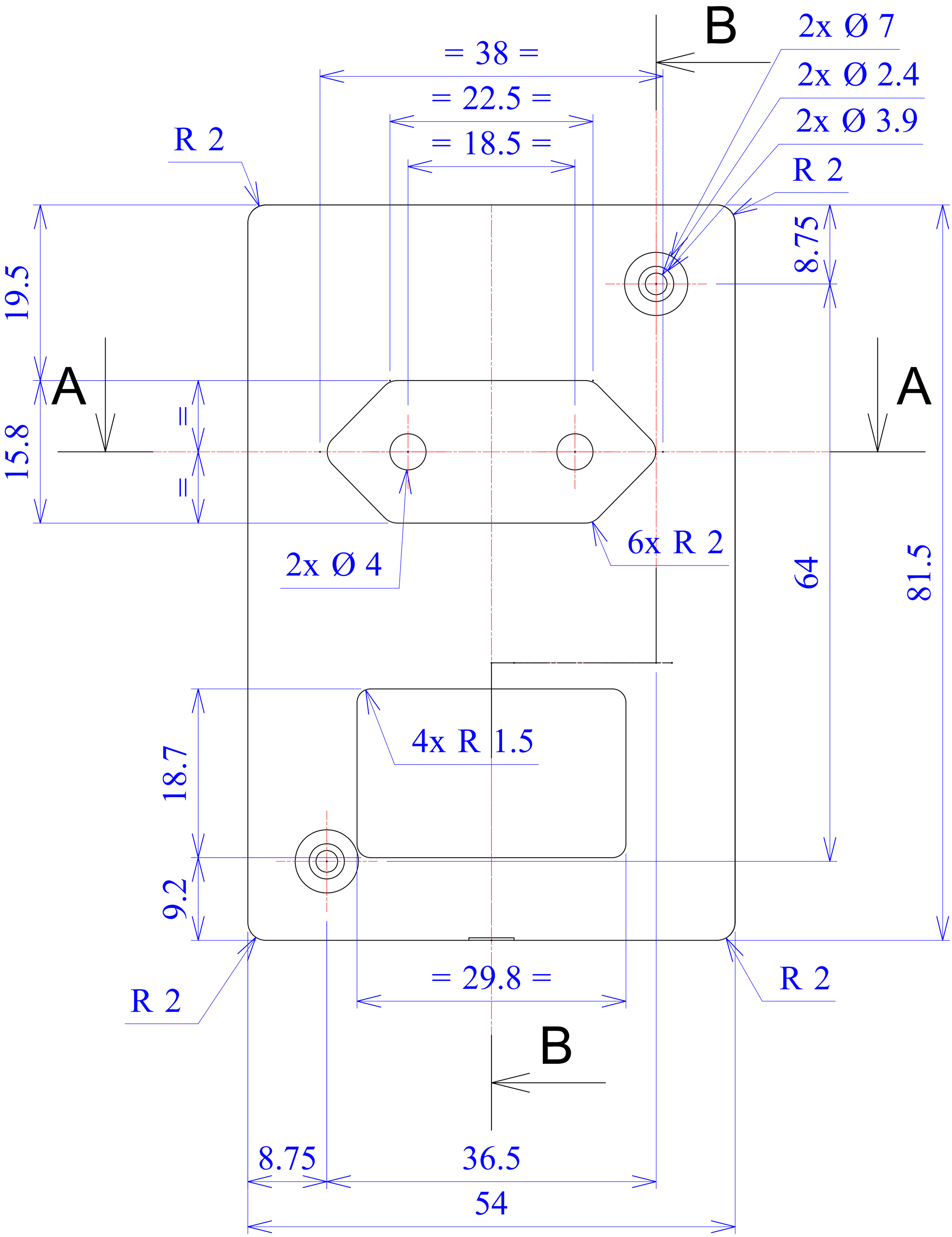
B
2x Ø 7
2x Ø 2.4
2x Ø 3.9
= 38 =
= 22.5 =
= 18.5 =
R 2
R 2
8.75
19.5
A
A
15.8
II
II
2x Ø 4
6x R 2
64
81.5
4x R 1.5
18.7
9.2
= 29.8 =
R 2
R 2
B
8.75
36.5
54

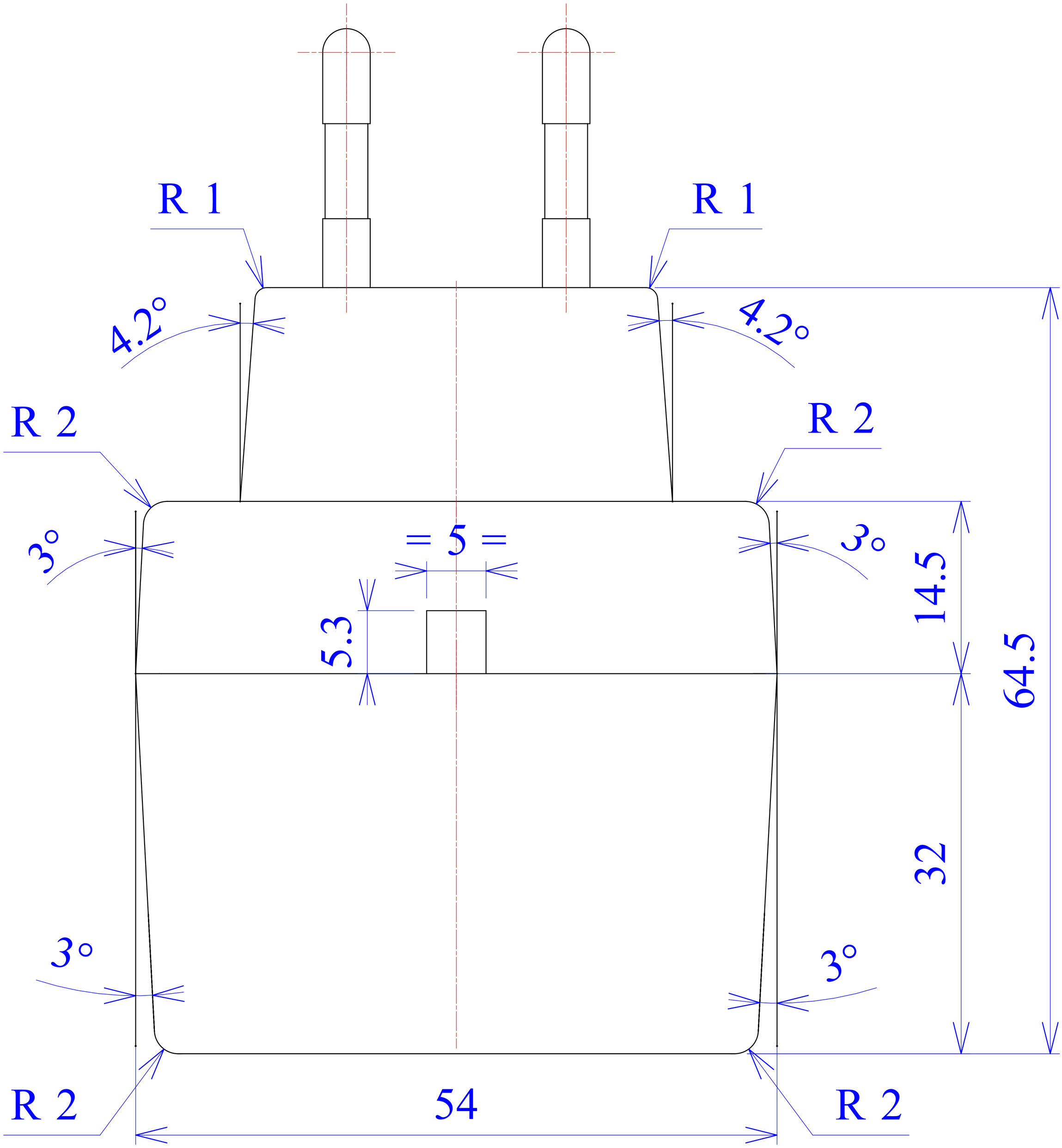
R 1
R 1
4.2°
4.2°
R 2
R 2
3°
= 5 =
3°
5.3
14.5
64.5
32
3°
3°
R 2
54
R 2

A - A

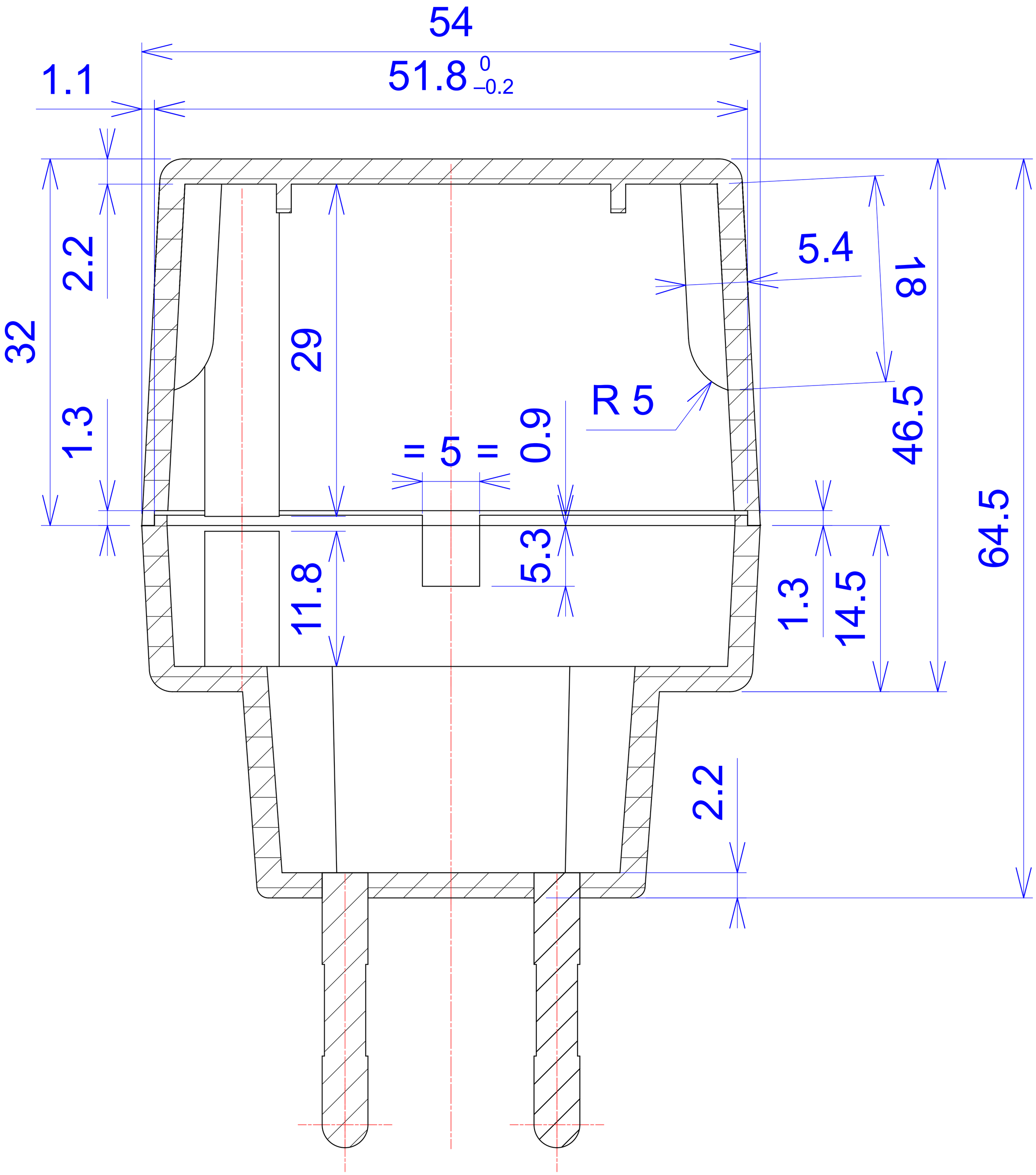

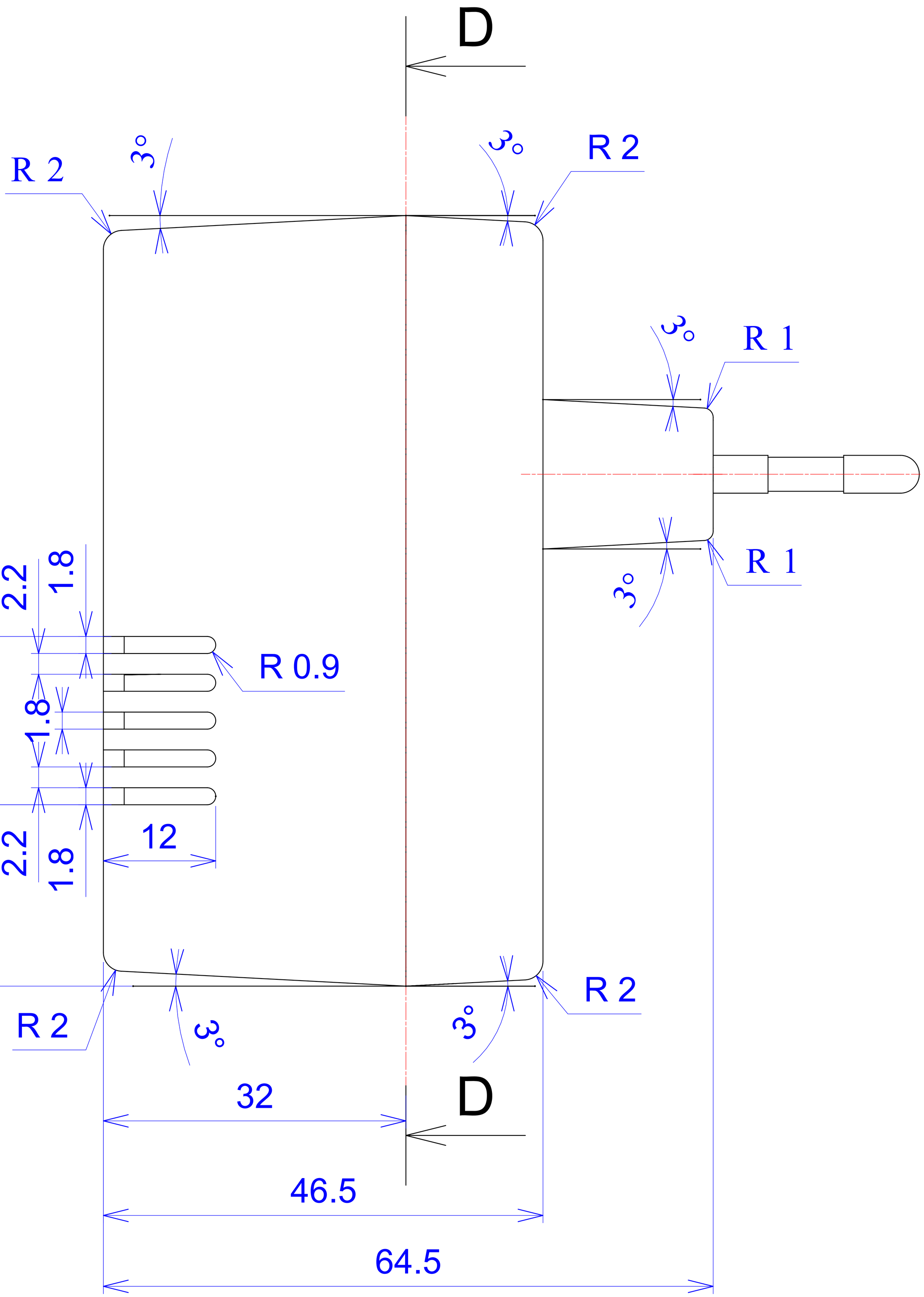
D
R 2
3°
3°
R 2
3°
R 1
R 1
3°
2.2
1.8
17.8
1.8
R 0.9
12
19.2
2.2
1.8
R 2
3°
3°
R 2
32
D
46.5
64.5

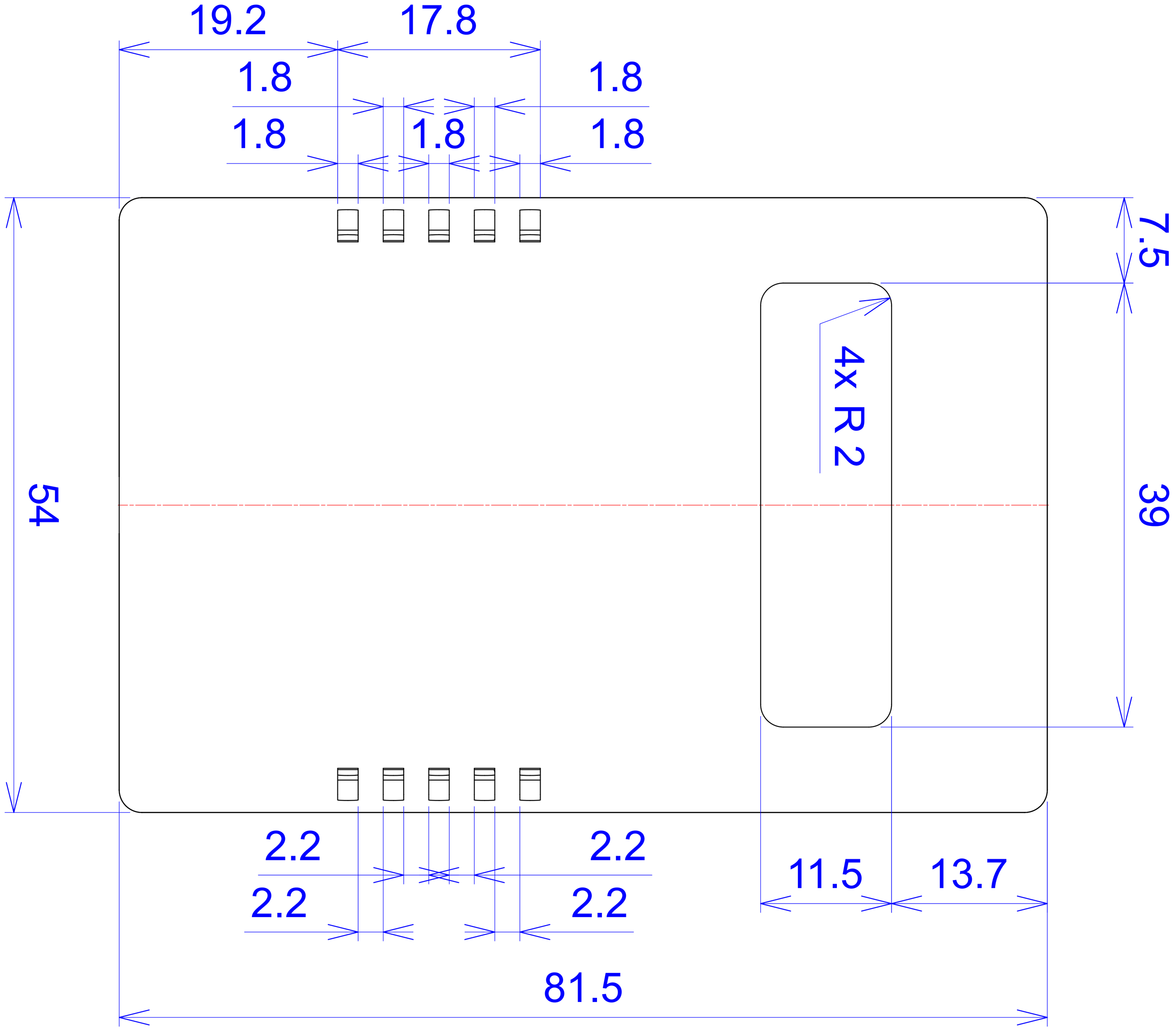
19.2
17.8
1.8
1.8
1.8
1.8
1.8
7.5
4x R 2
54
39
2.2
2.2
2.2
2.2
11.5
13.7
81.5

C - C

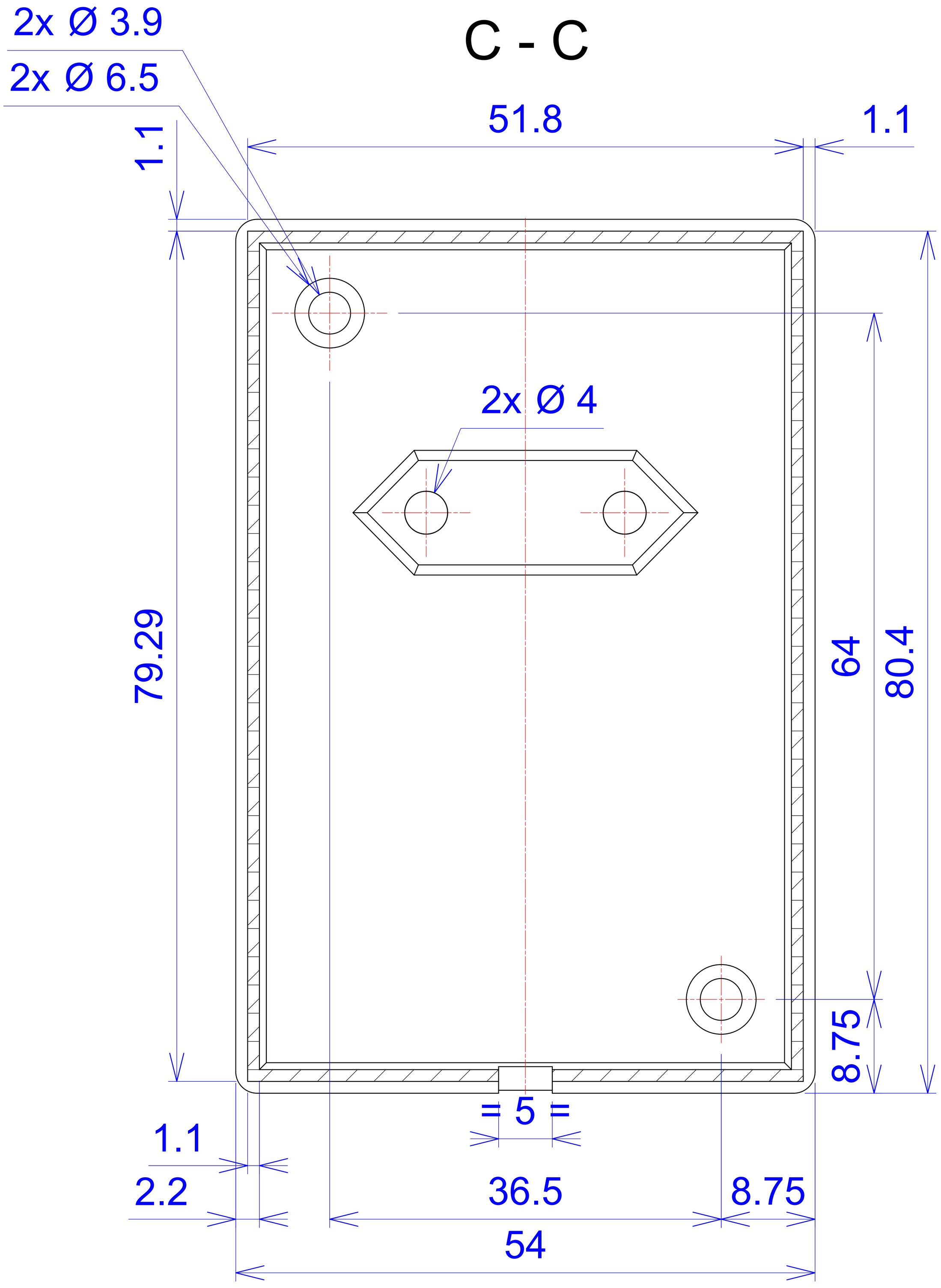

D - D

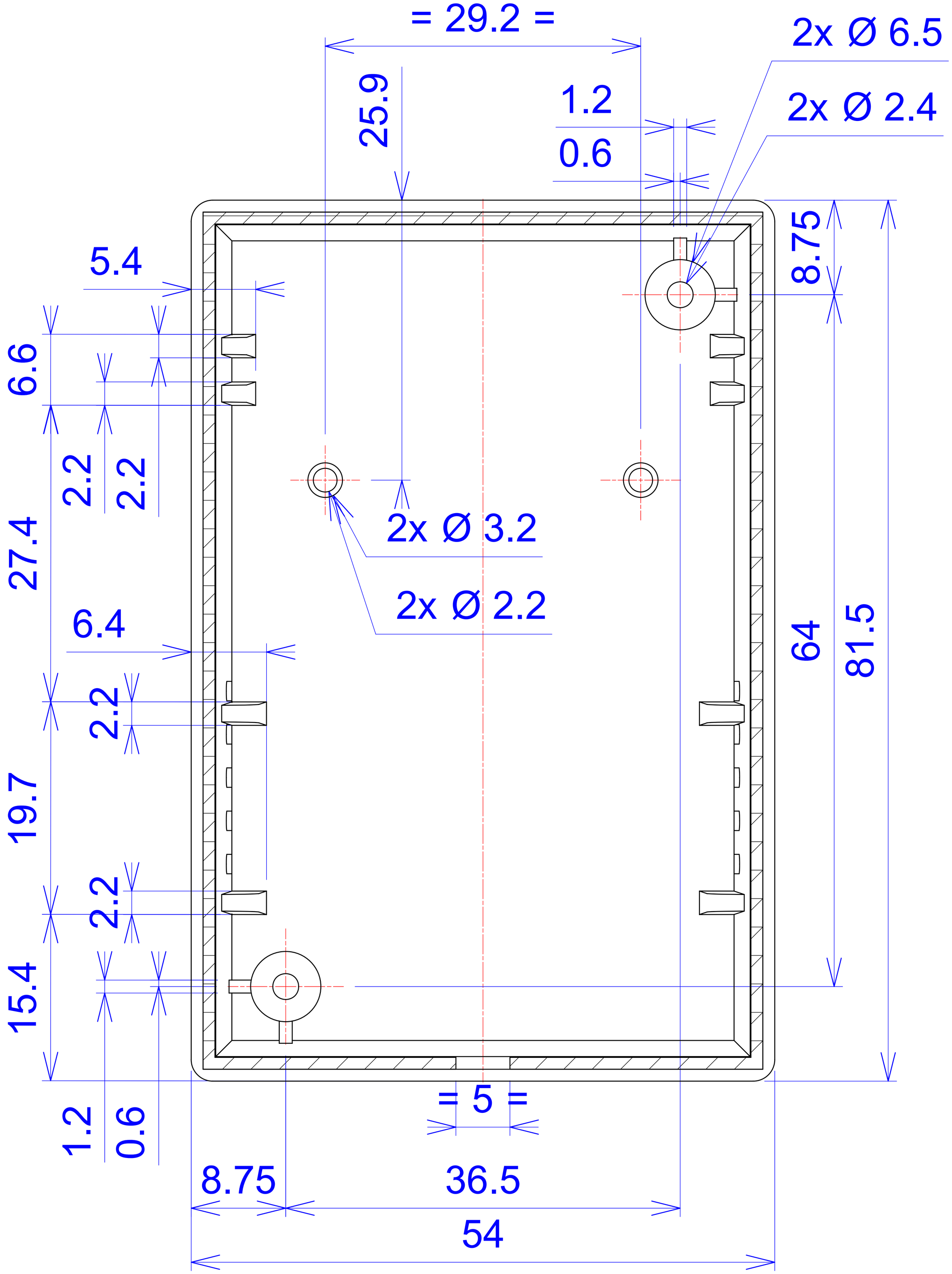
= 29.2 =
25.9
1.2
0.6
2x Ø 6.5
2x Ø 2.4
8.75
5.4
6.6
2.2
2.2
27.4
2x Ø 3.2
2x Ø 2.2
6.4
2.2
19.7
2.2
15.4
1.2
0.6
64
81.5
= 5 =
8.75
36.5
54