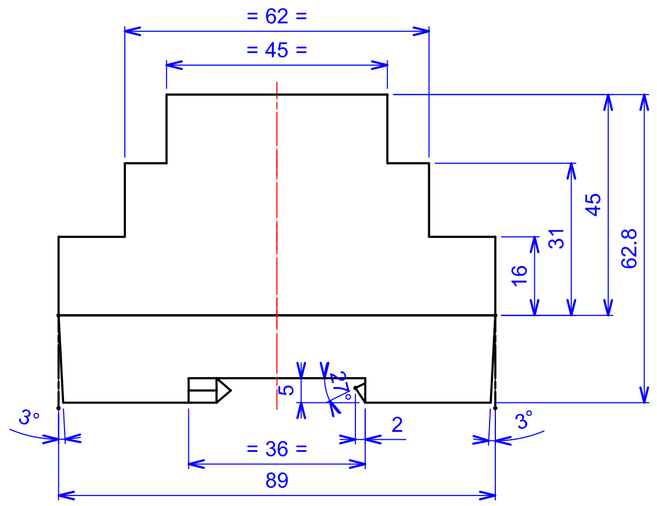

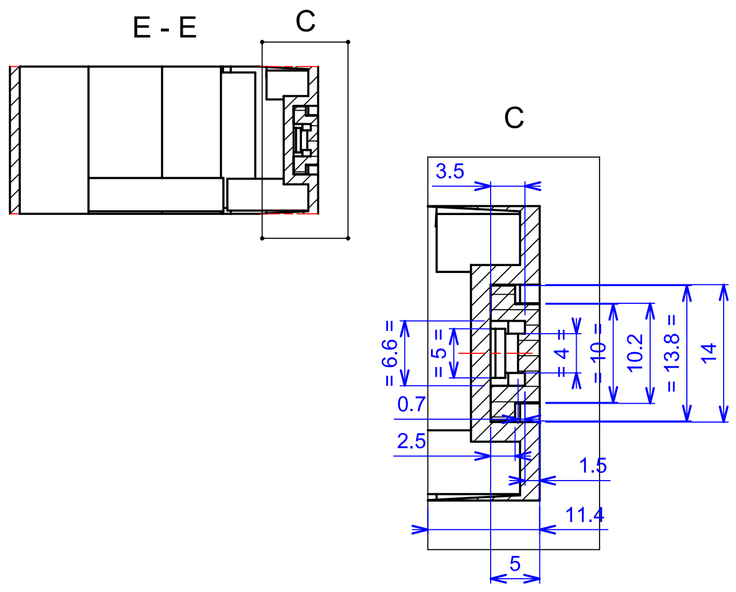

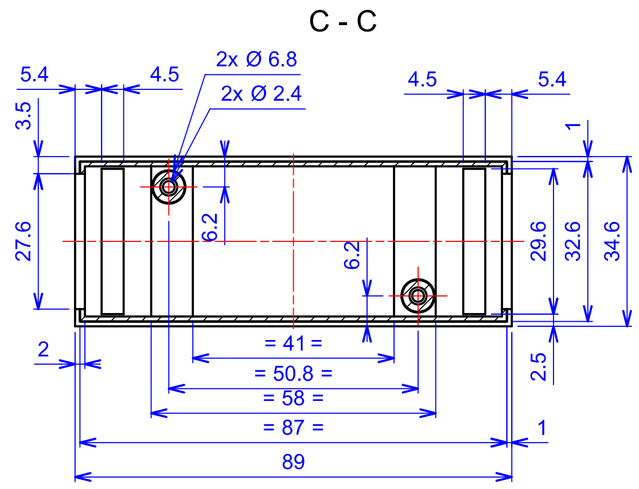

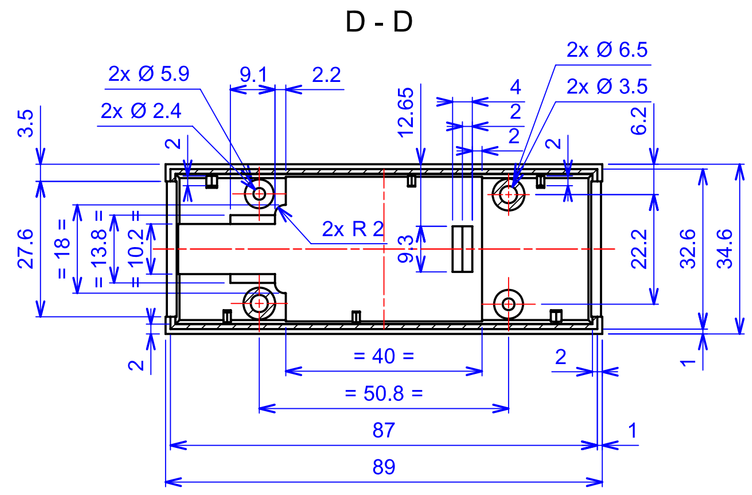

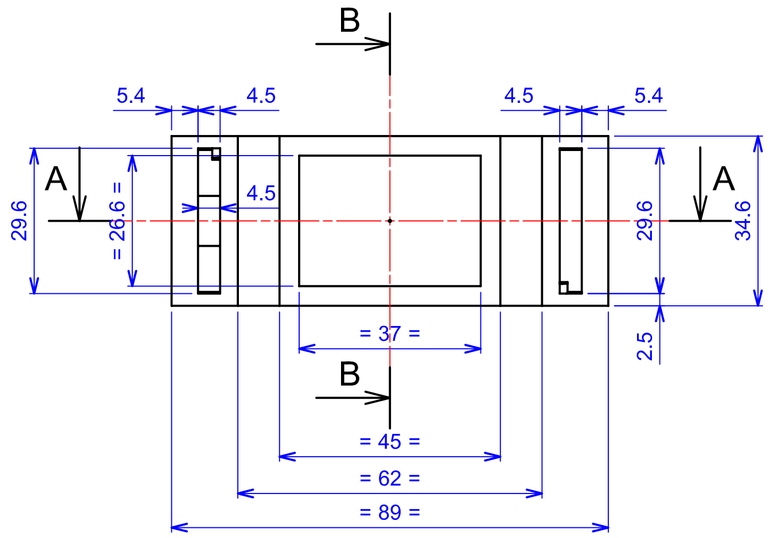

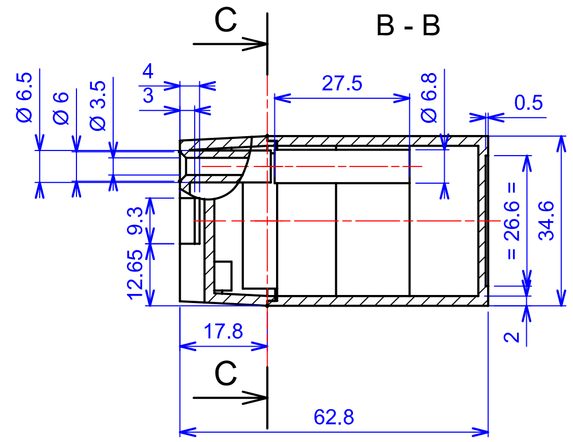

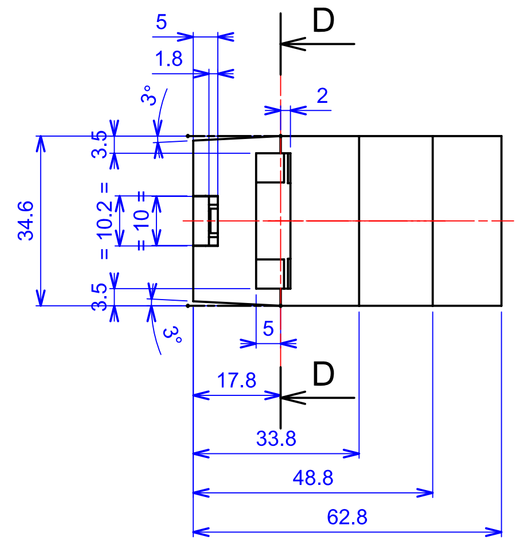

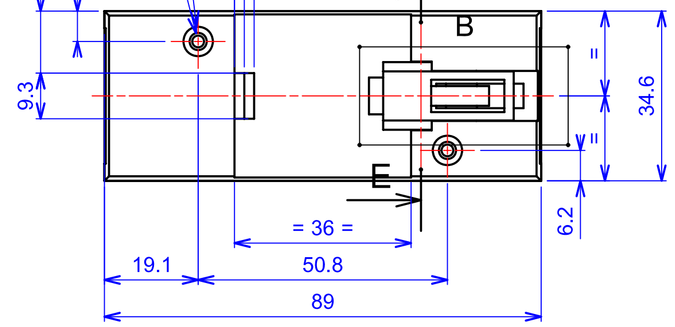

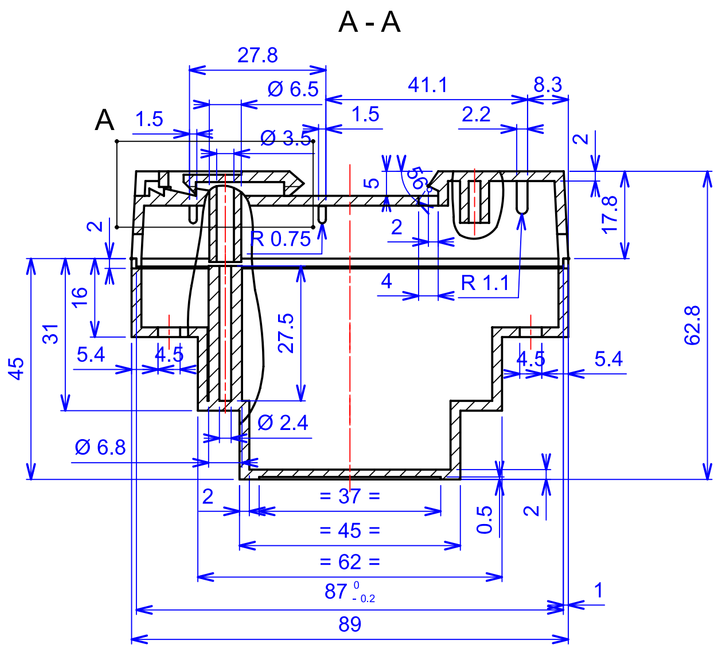

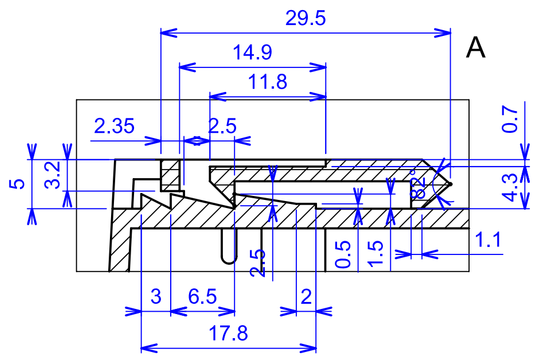

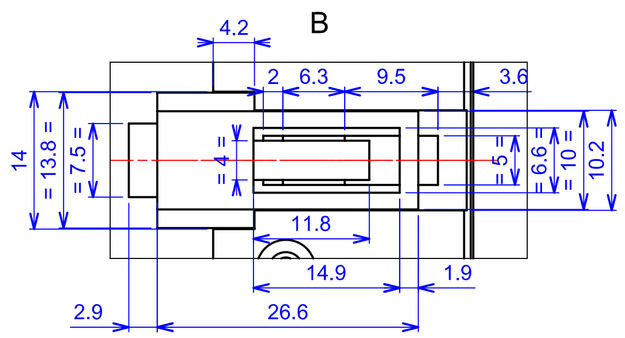

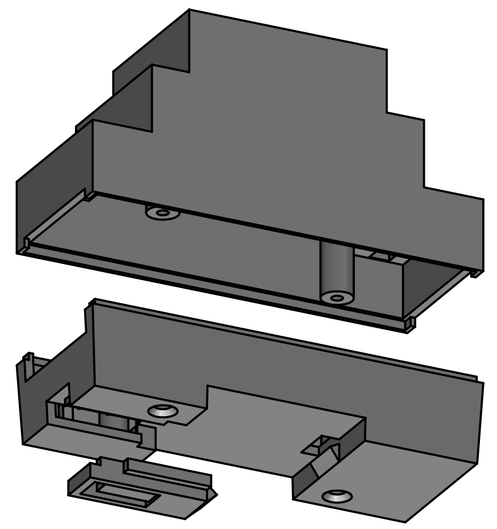

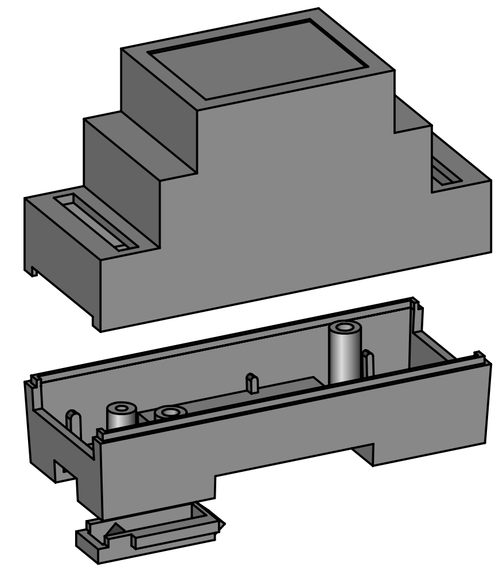

Model produktu	Z-103	
Format: A4	Materiał: Polystyrene (PS)	
Skala: 1:1	Tolerancja: +/- 0.1	

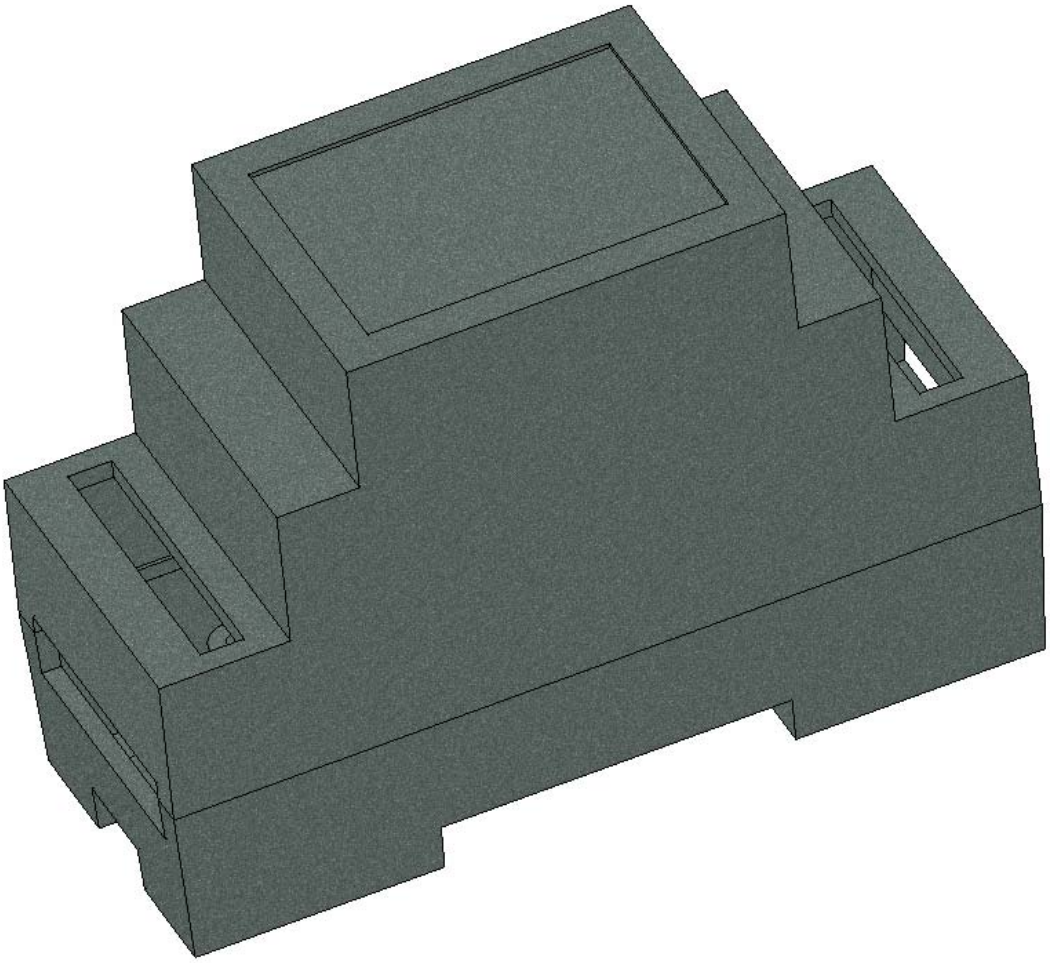

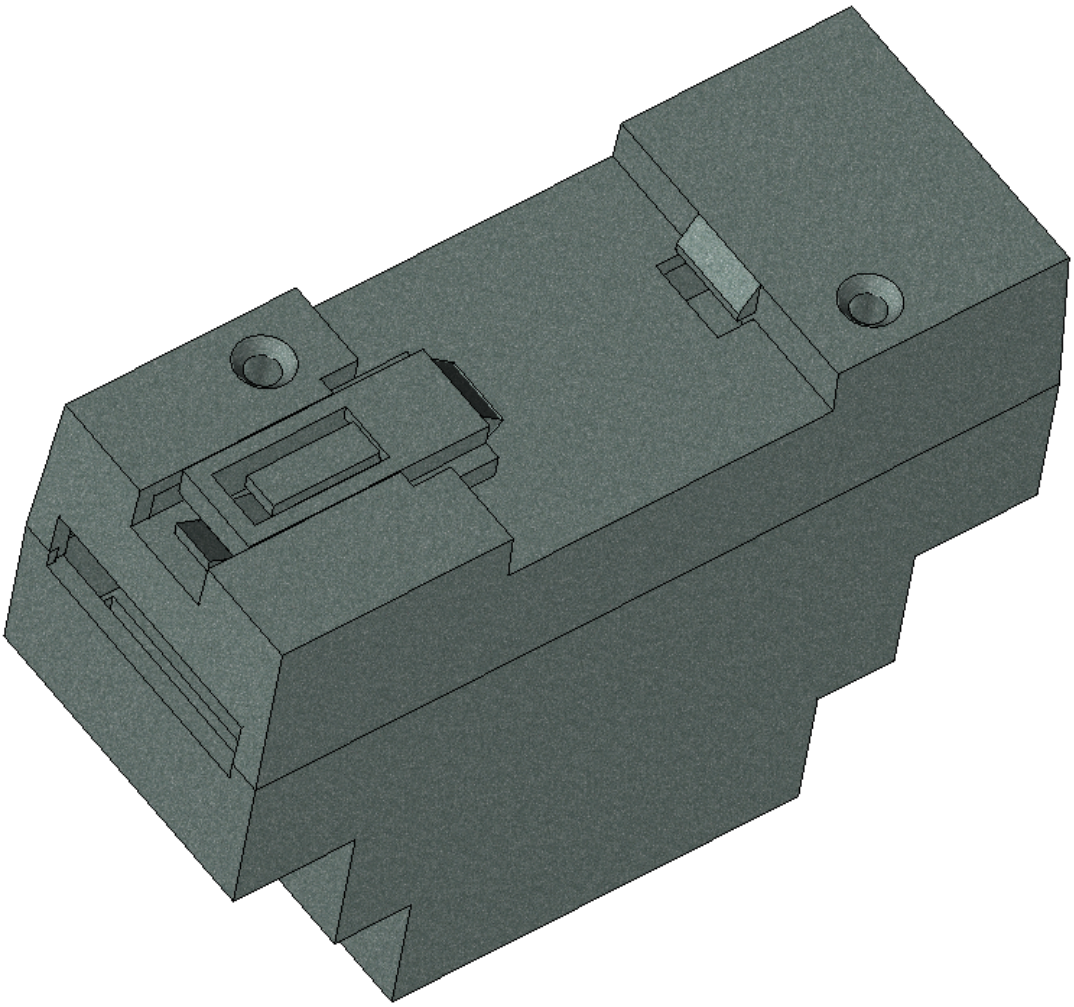

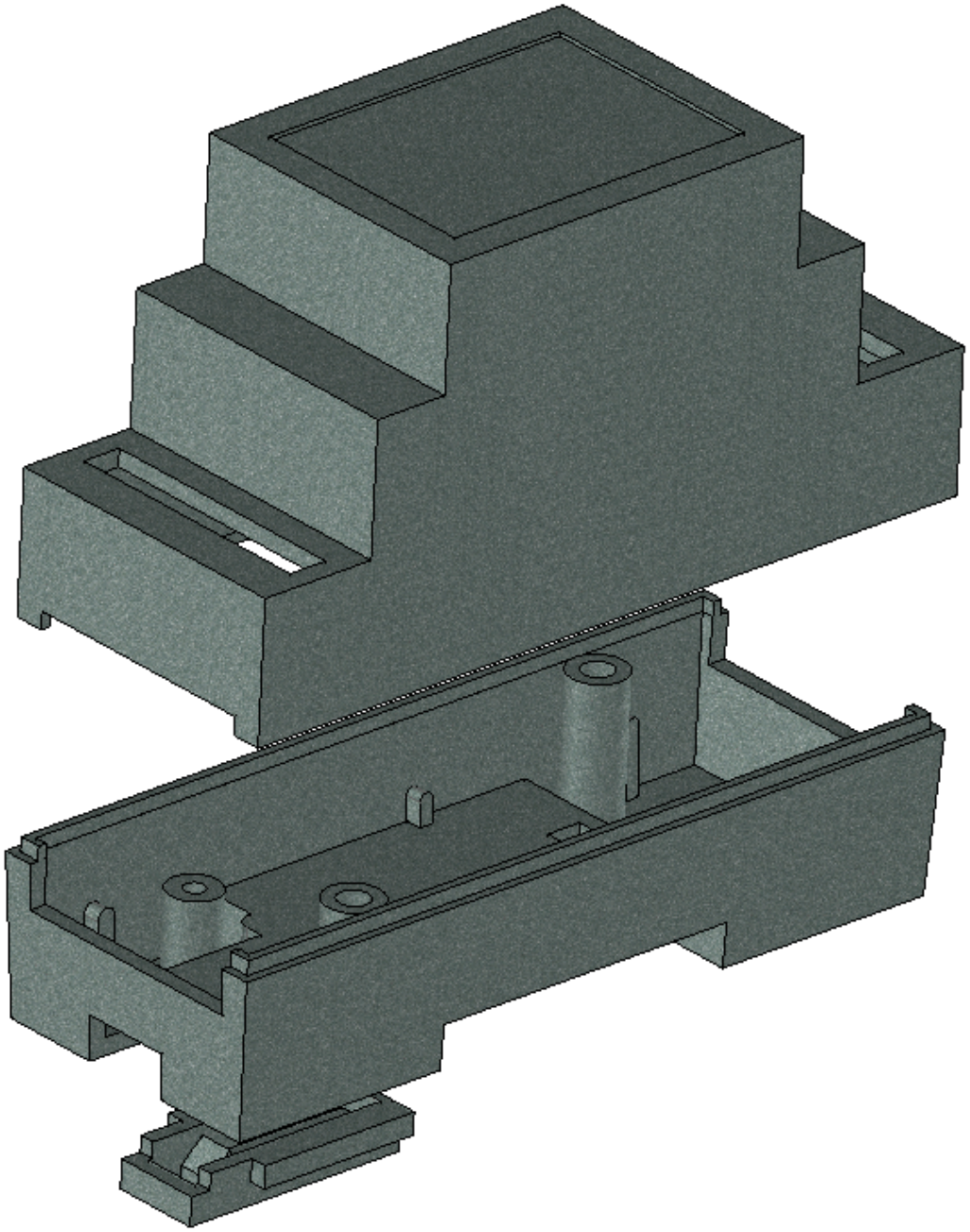

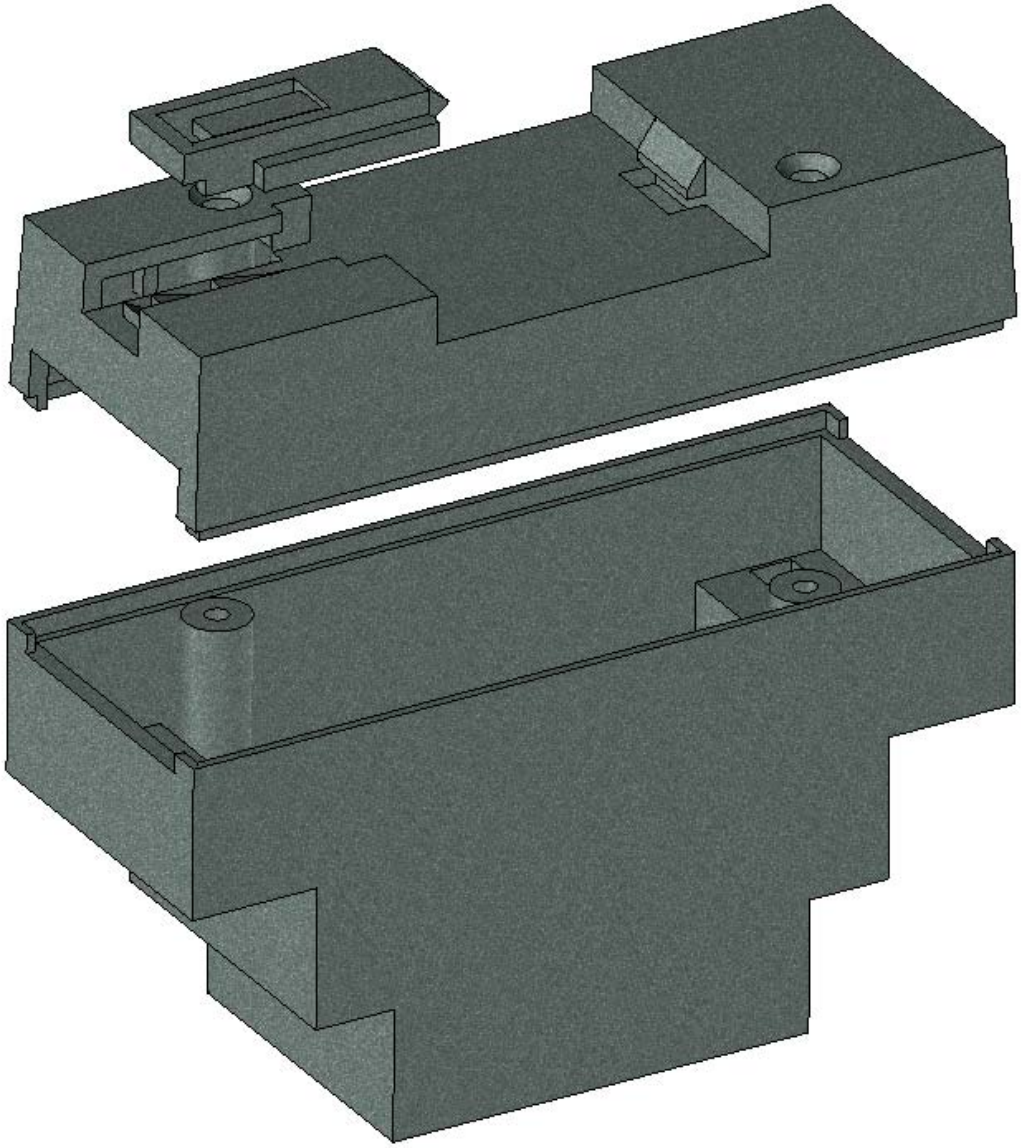

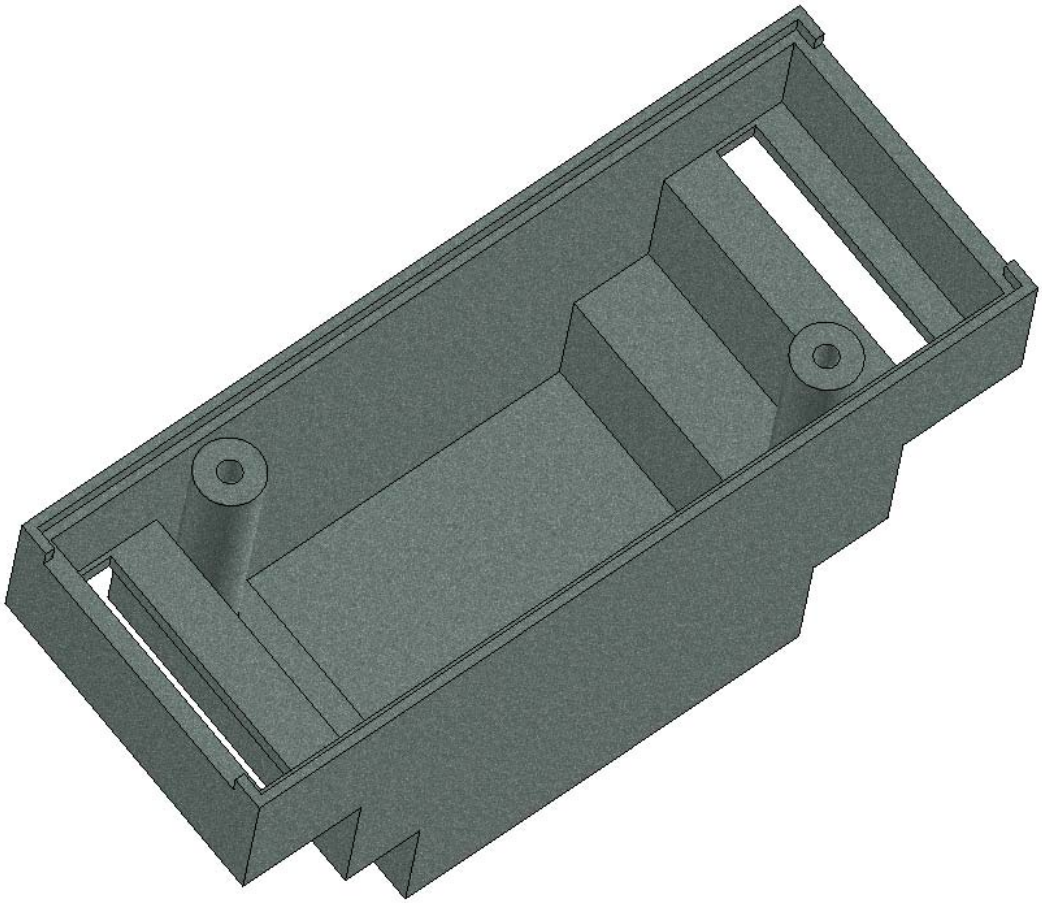

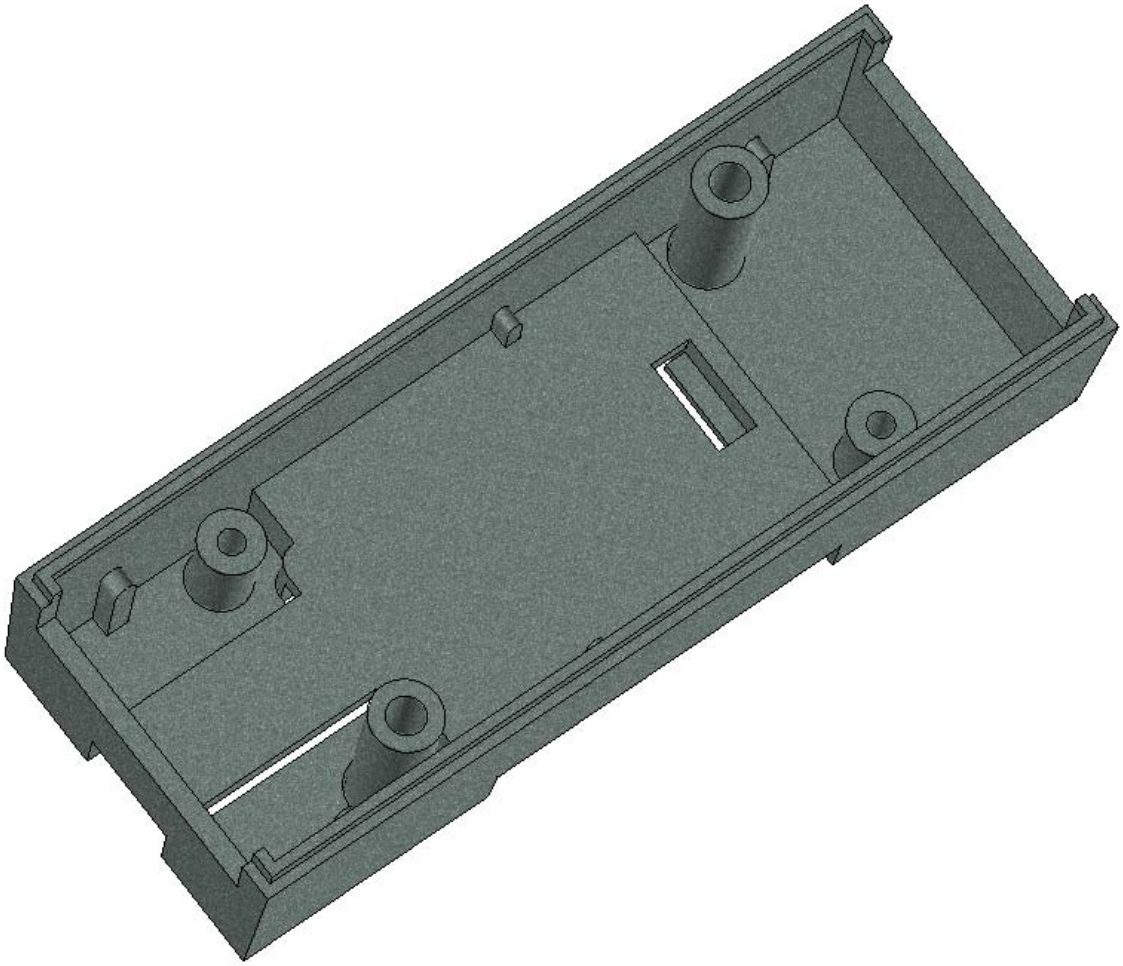

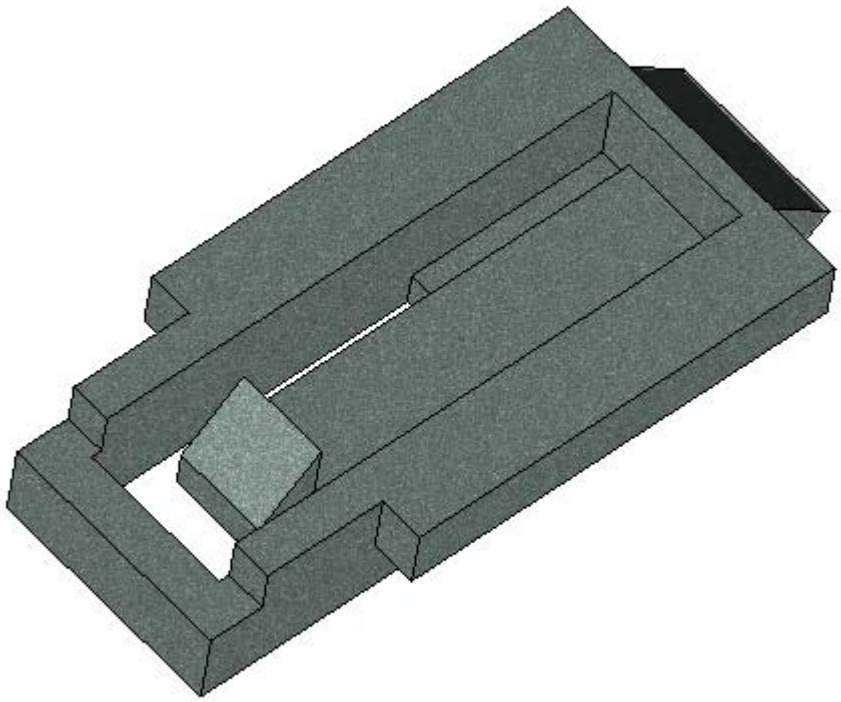

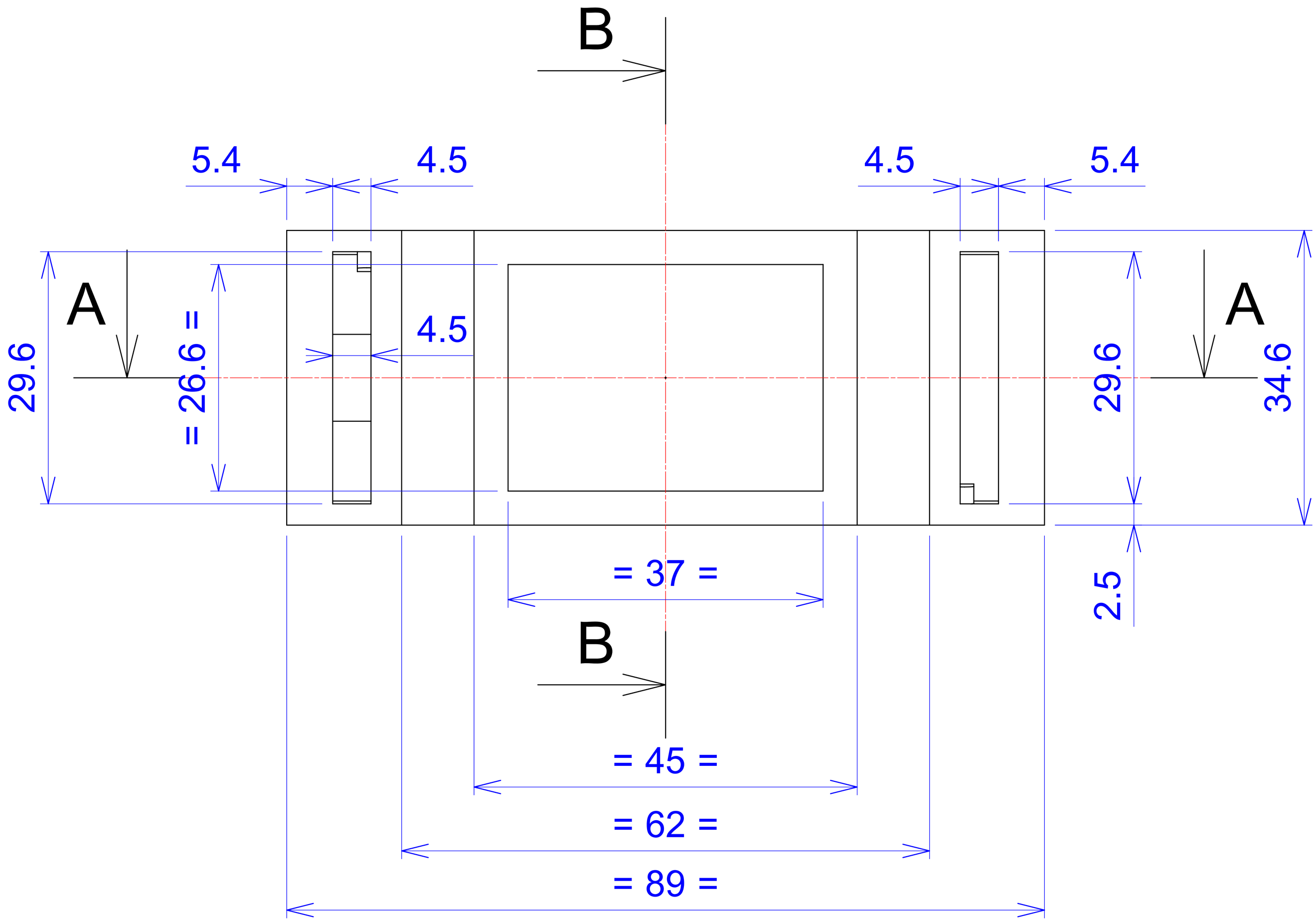
B
5.4
4.5
4.5
5.4
A
29.6
= 26.6 =
4.5
29.6
A
34.6
= 37 =
2.5
B
= 45 =
= 62 =
= 89 =

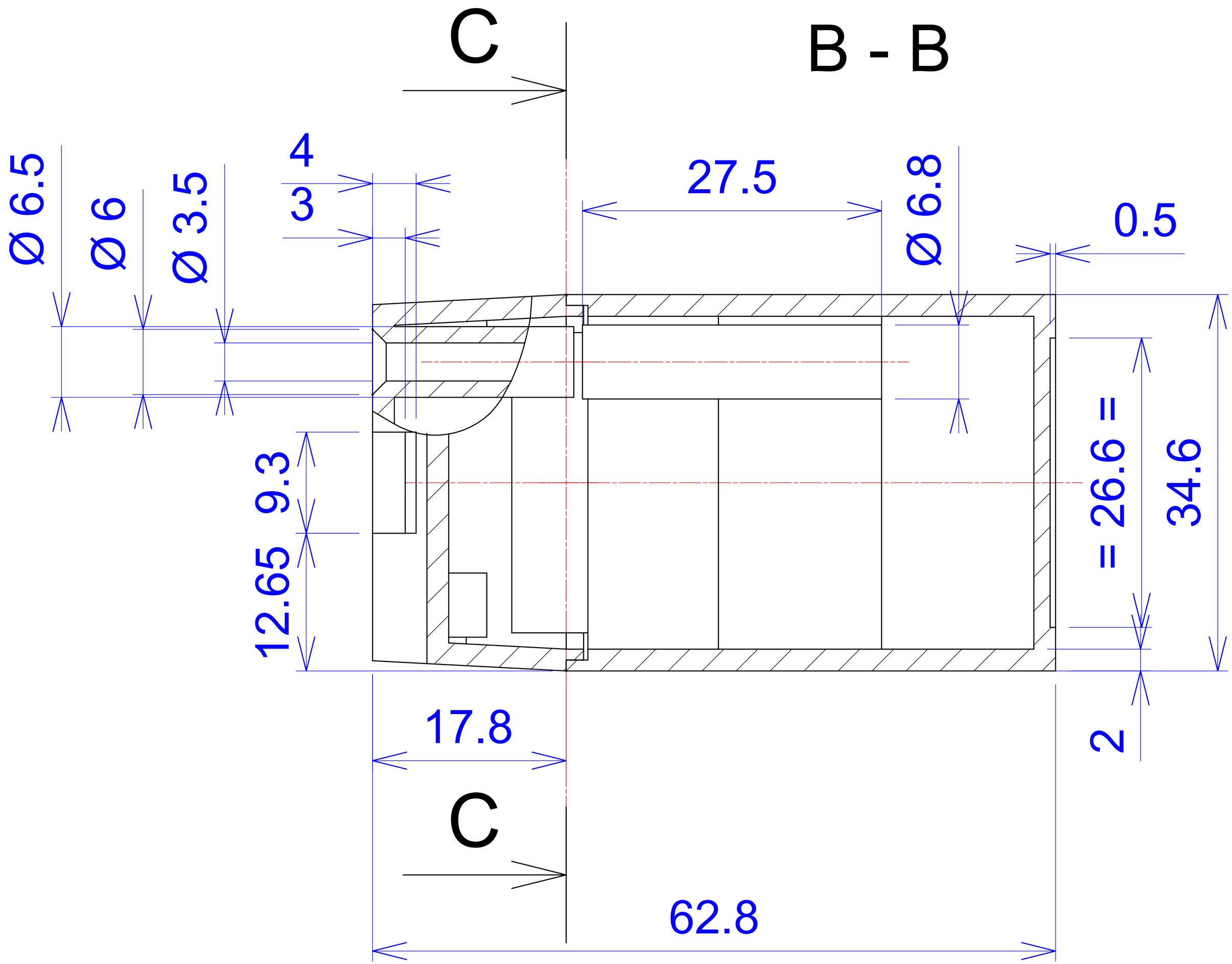
C
B - B
Ø 6.5
Ø 6
Ø 3.5
4
3
27.5
Ø 6.8
0.5
9.3
12.65
= 26.6
34.6
2
17.8
C
62.8

A - A

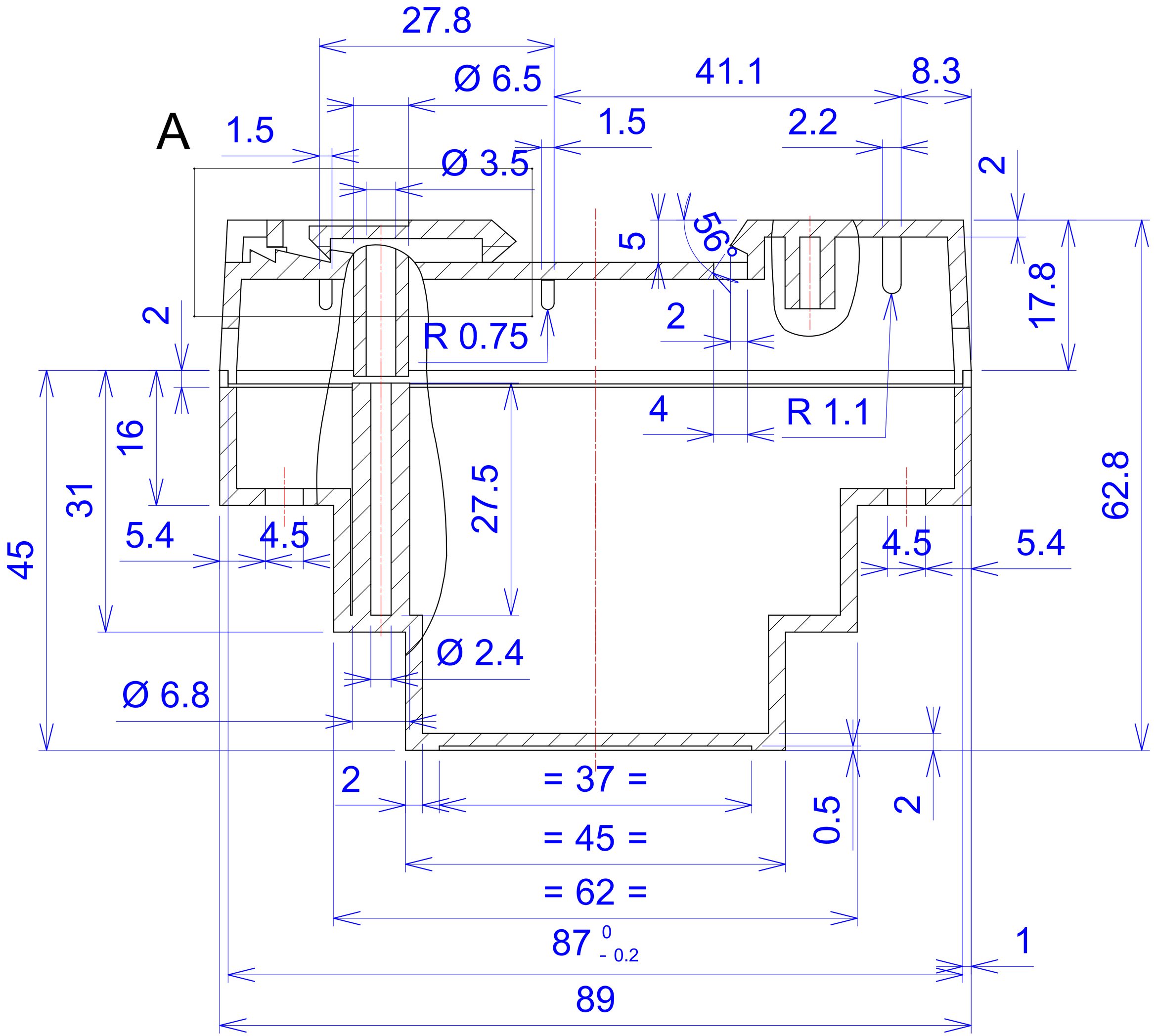
27.8
Ø 6.5
41.1
8.3
A
1.5
1.5
2.2
Ø 3.5
2
5
56°
2
R 0.75
17.8
4
R 1.1
16
31
45
27.5
62.8
5.4
4.5
4.5
5.4
Ø 2.4
Ø 6.8
2
= 37 =
0.5
2
= 45 =
= 62 =
87 0 - 0.2
1
89

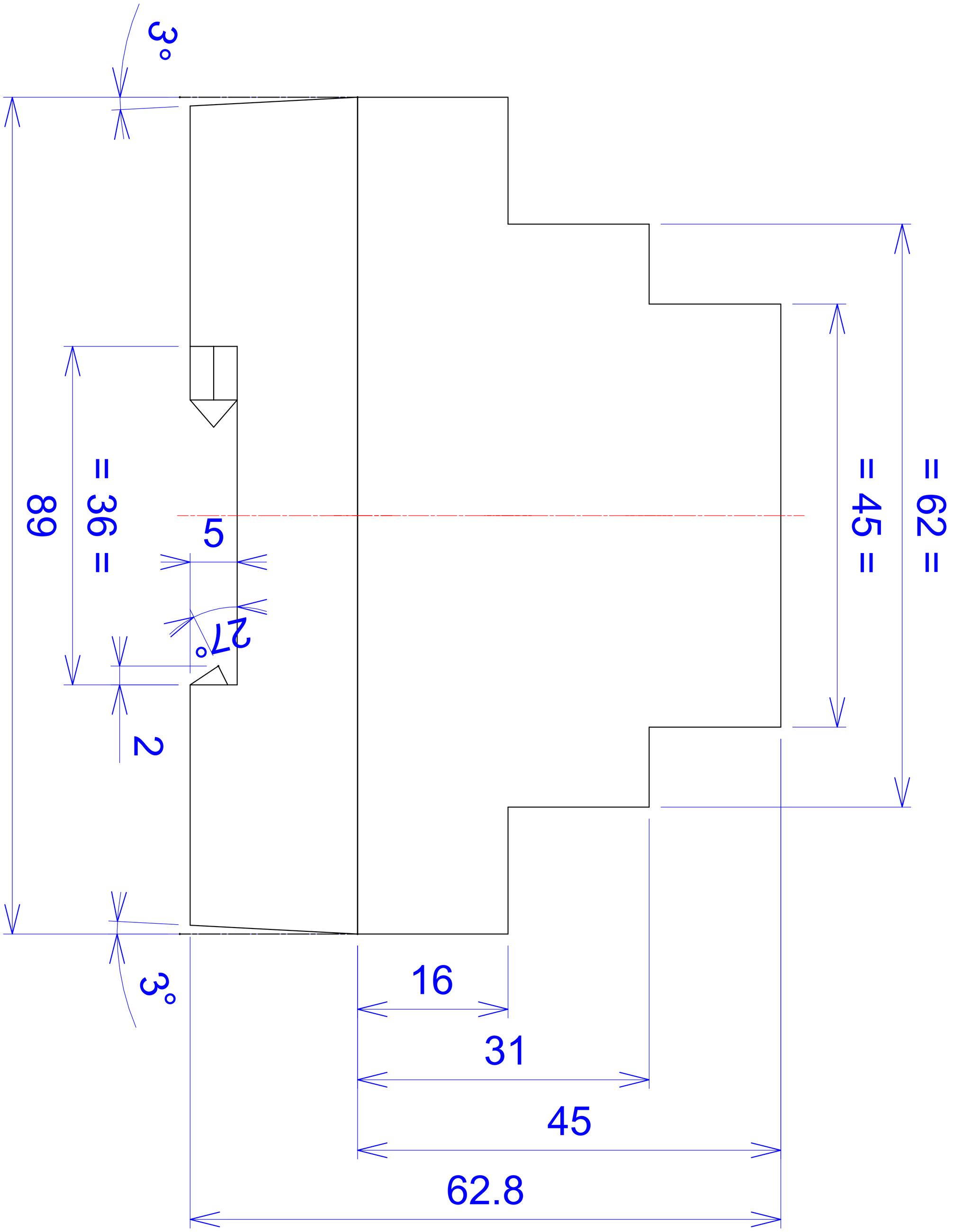
3°
89
= 36 =
5
27°
2
3°
= 45 =
= 62 =
16
31
45
62.8

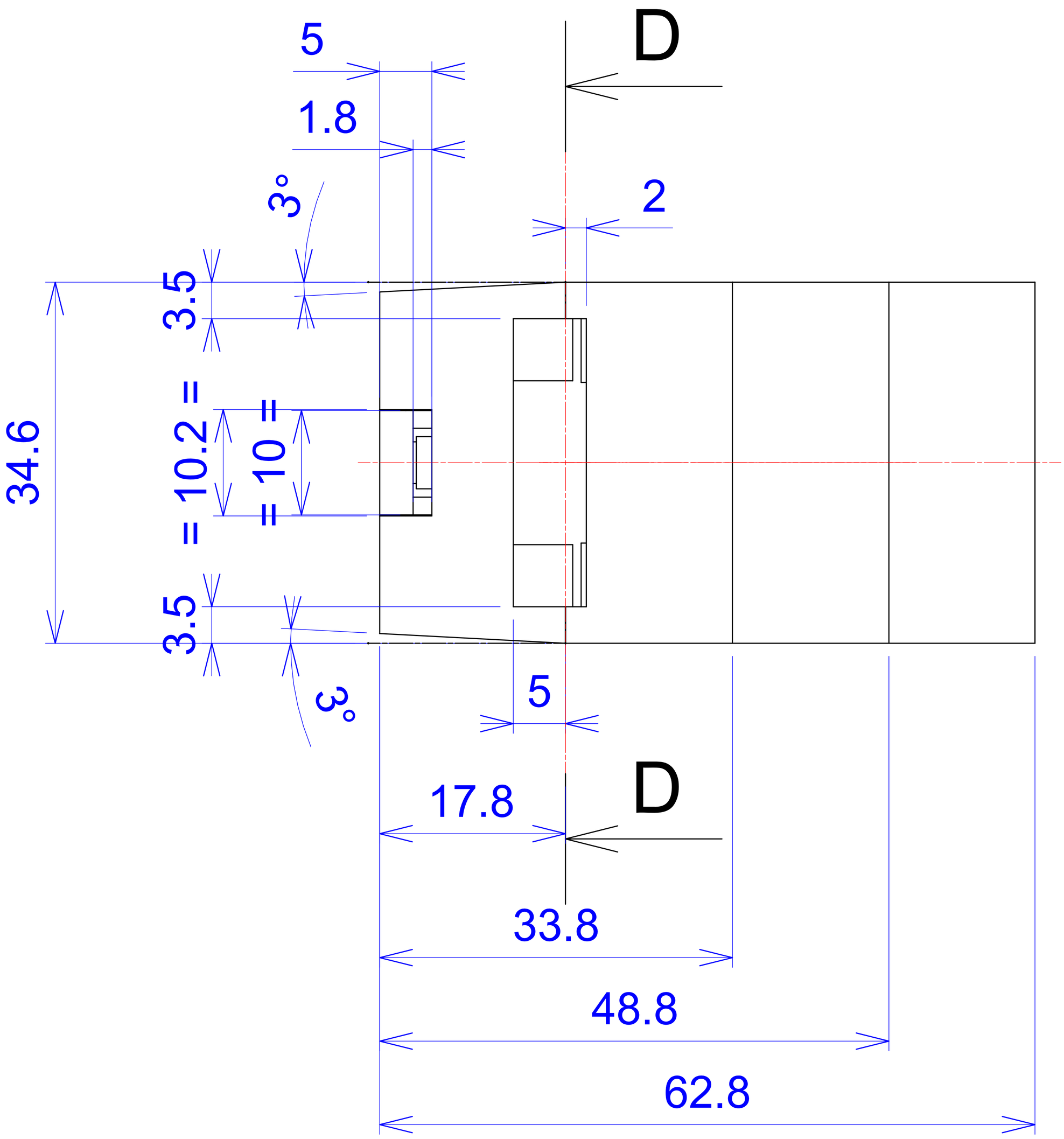
5
1.8
D
3°
2
3.5
34.6
= 10.2 =
= 10 =
3.5
3°
5
D
17.8
33.8
48.8
62.8

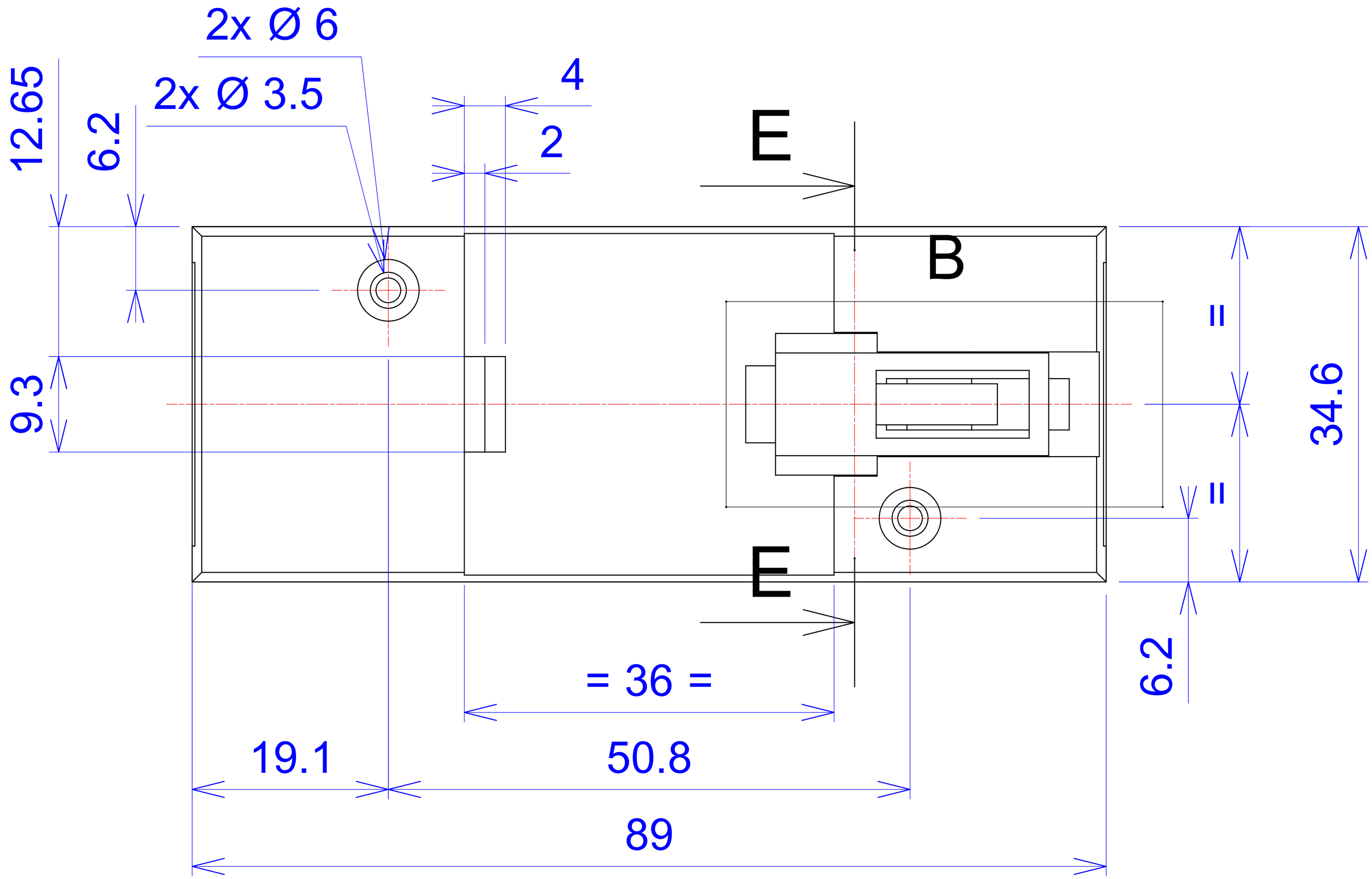
2x Ø 6
2x Ø 3.5
12.65
6.2
9.3
4
2
E
B
II
34.6
II
6.2
E
= 36 =
19.1
50.8
89

C - C

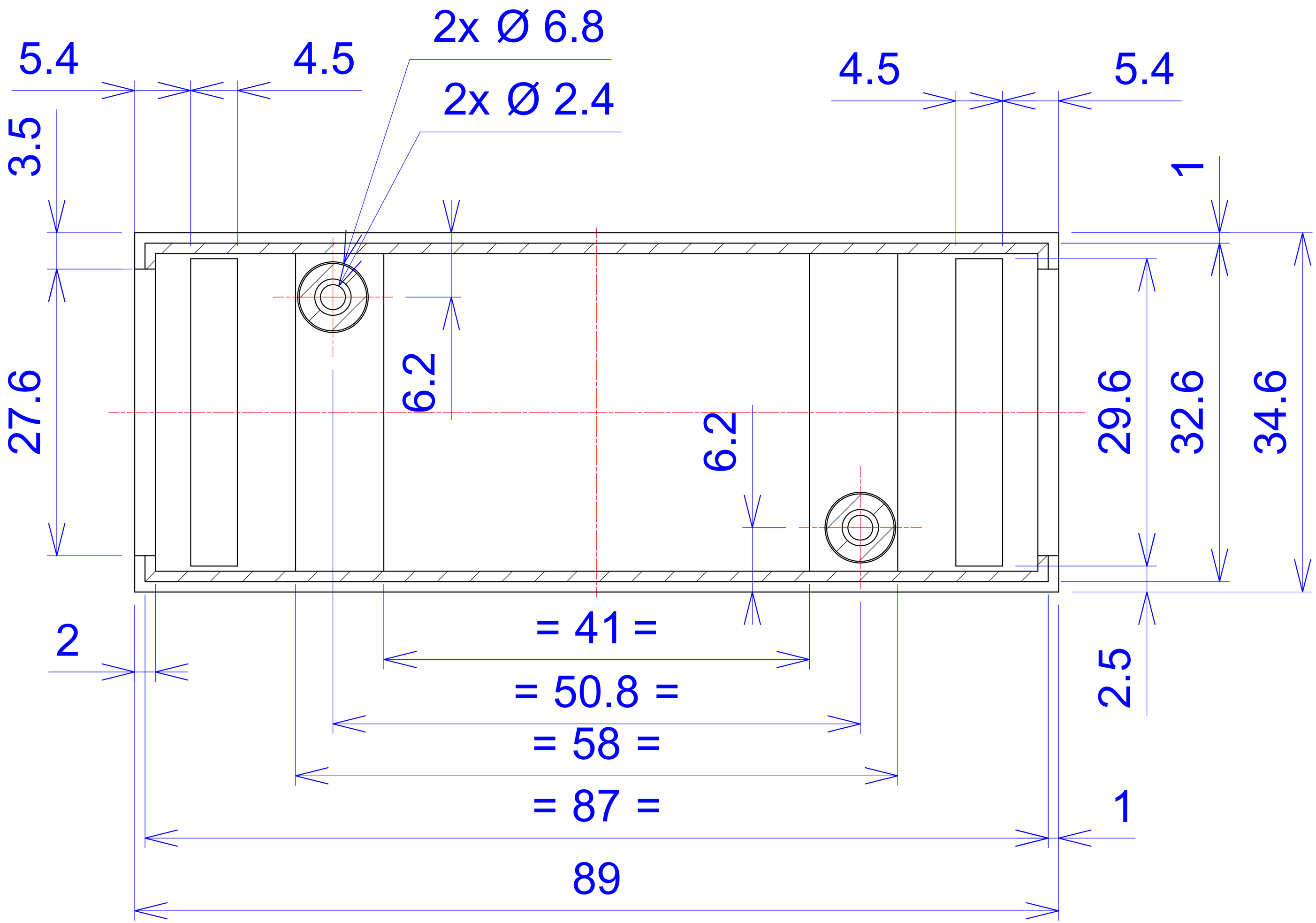
5.4
4.5
2x Ø 6.8
2x Ø 2.4
4.5
5.4
3.5
1
27.6
6.2
6.2
29.6
32.6
34.6
= 41 =
2
= 50.8 =
= 58 =
2.5
= 87 =
1
89

D - D

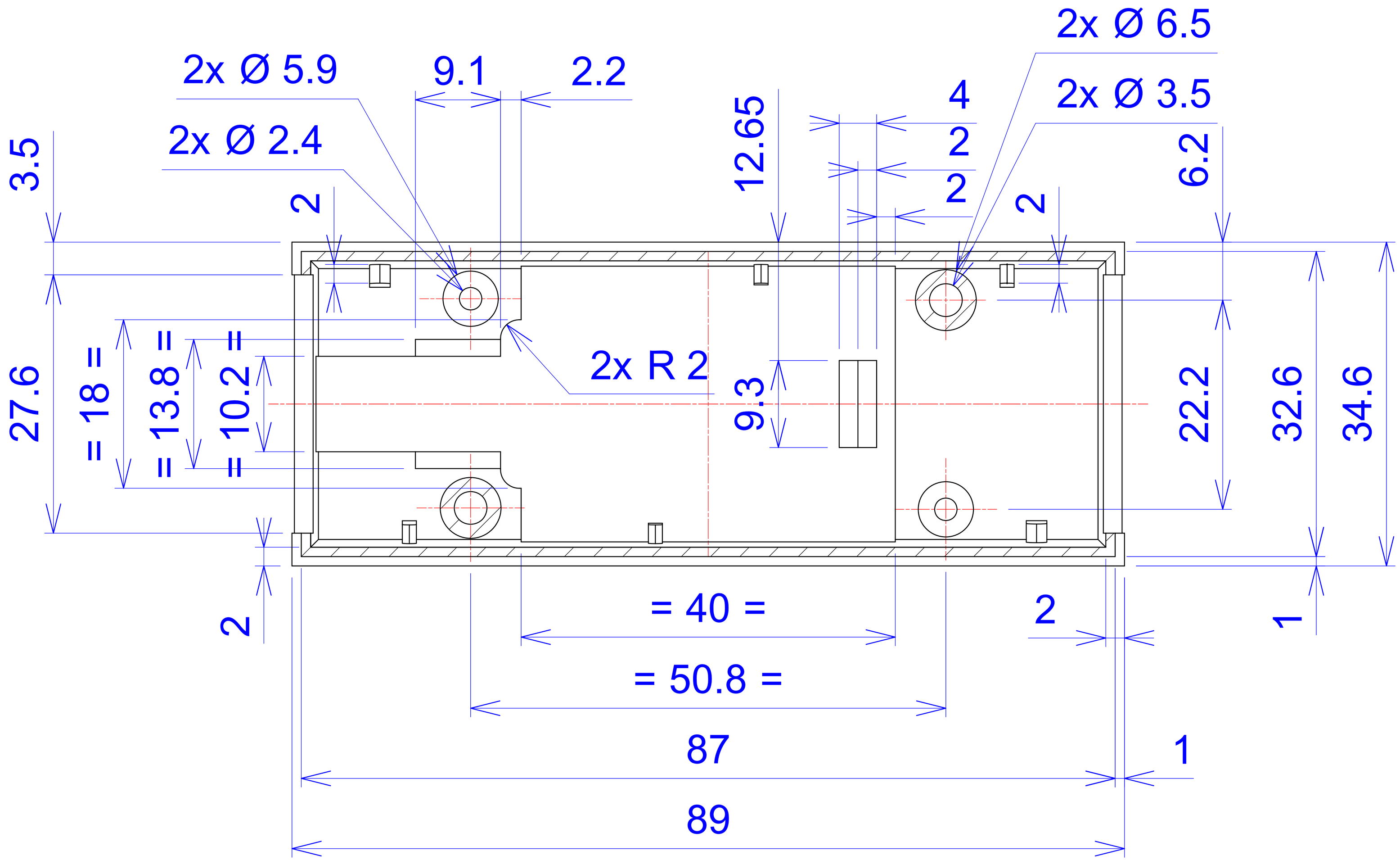
2x Ø 5.9
9.1
2.2
2x Ø 6.5
2x Ø 3.5
2x Ø 2.4
4
2
2
12.65
3.5
2
2
6.2
2x R 2
27.6
= 18 =
= 13.8 =
= 10.2 =
9.3
22.2
32.6
34.6
= 40 =
2
1
2
= 50.8 =
87
1
89

E - E

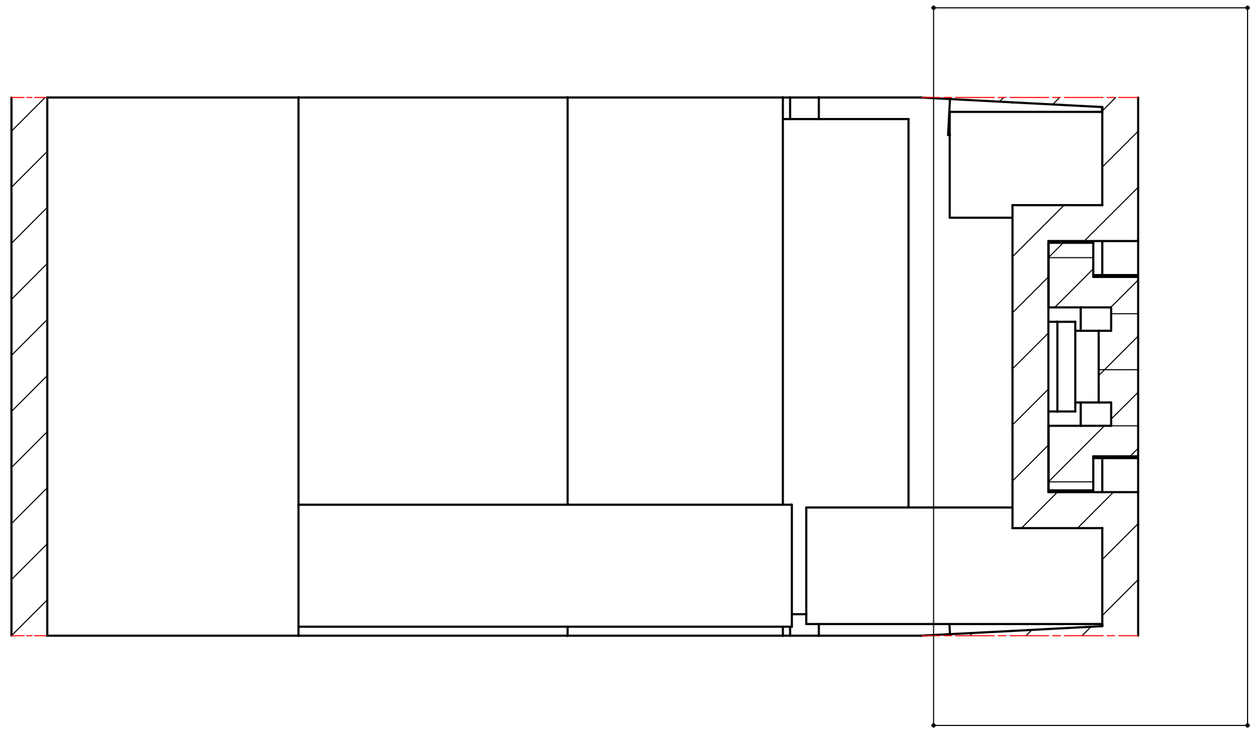

C

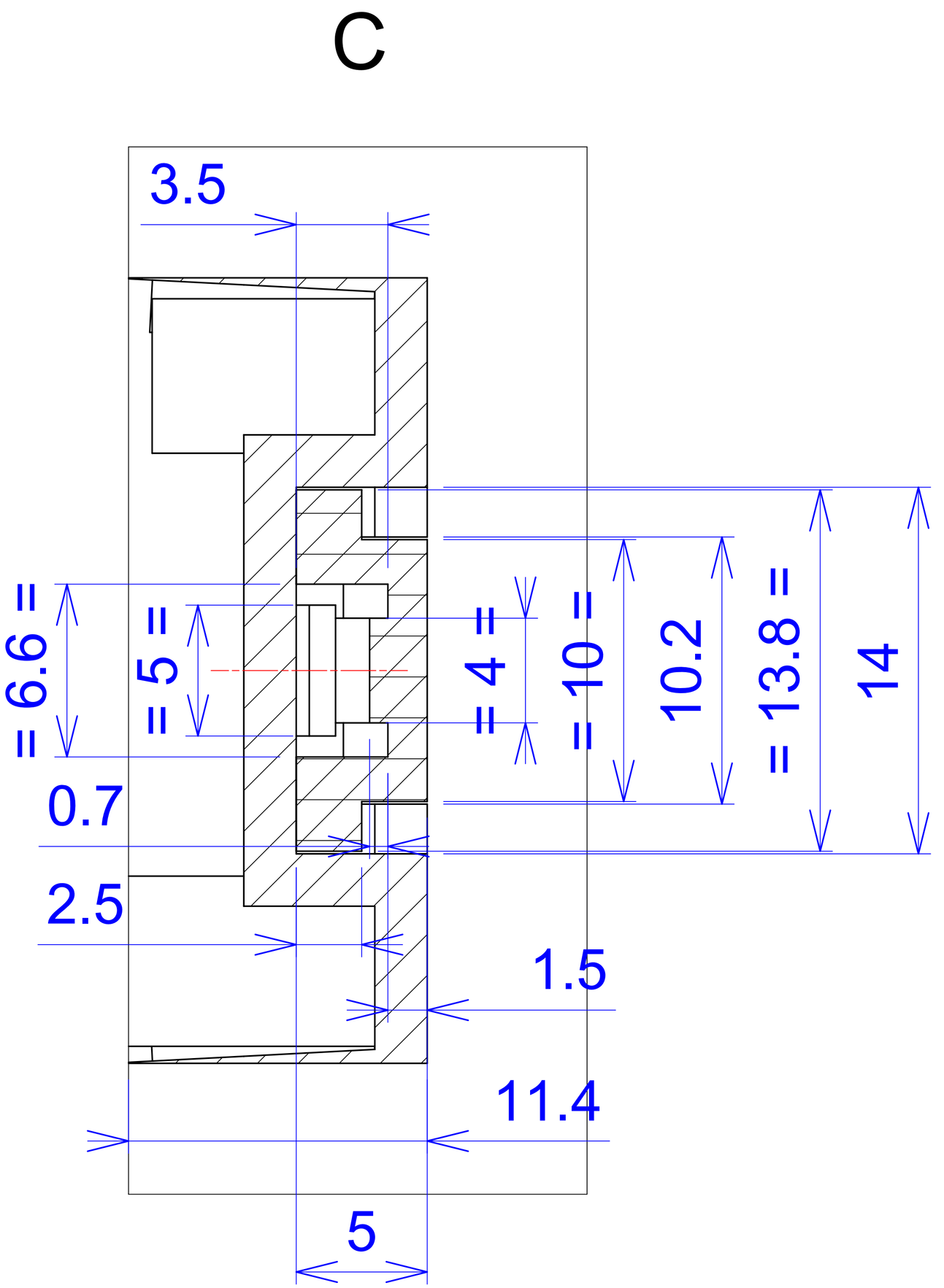

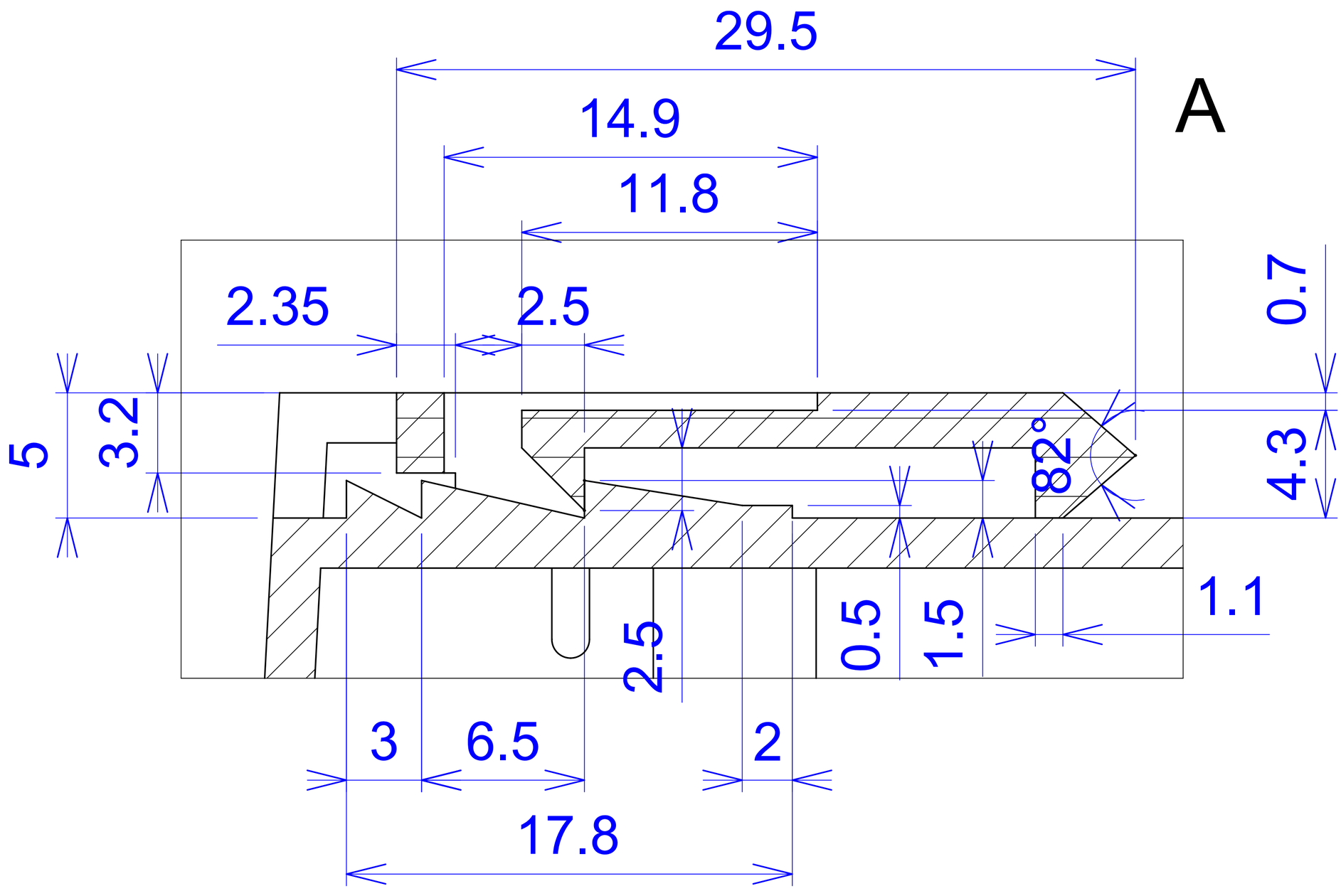
29.5
14.9
11.8
A
2.35
2.5
0.7
5
3.2
82°
4.3
1.1
0.5
1.5
2.5
3
6.5
2
17.8

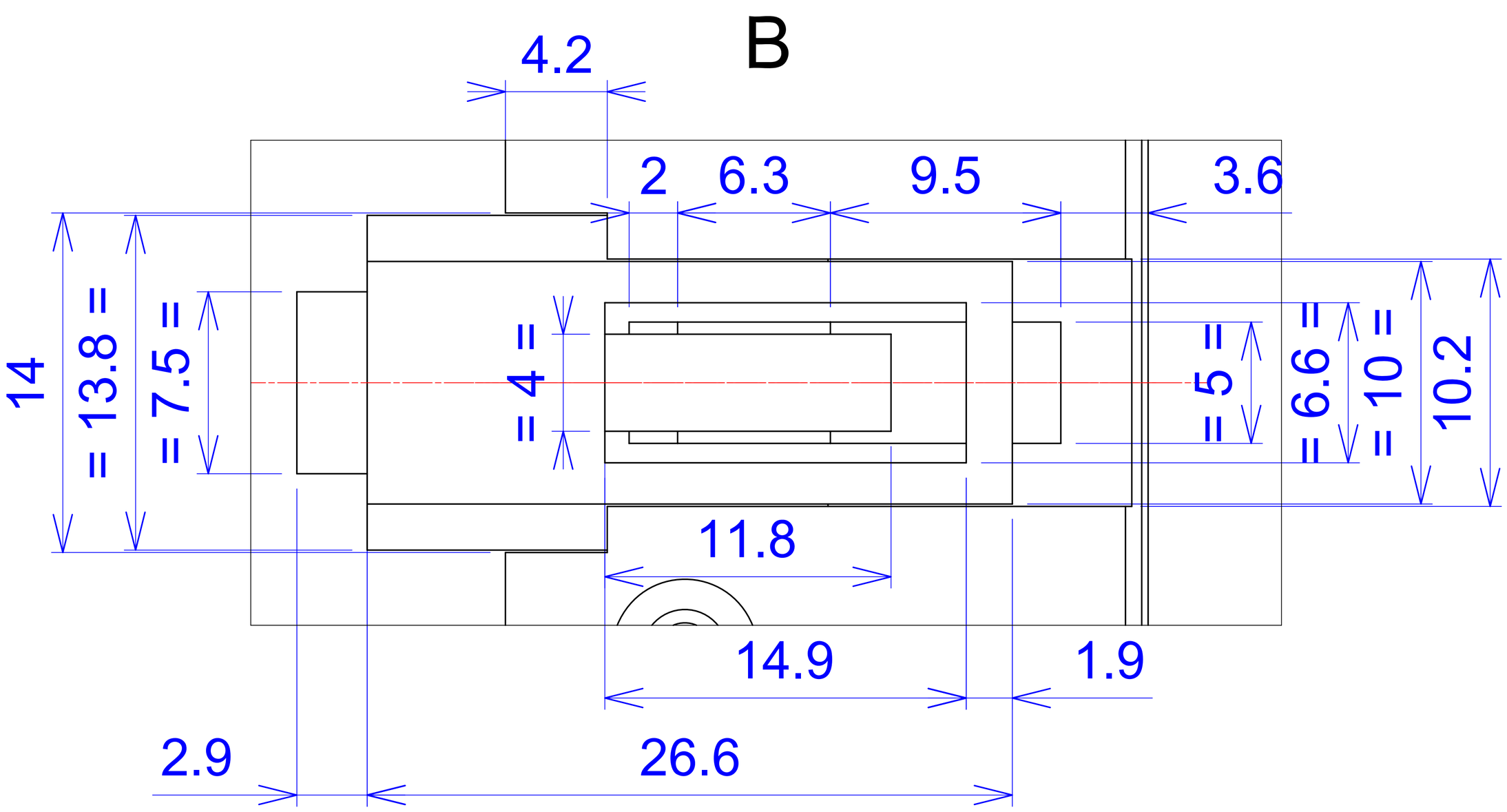
B
4.2
2
6.3
9.5
3.6
14
= 13.8 =
= 7.5 =
= 4 =
= 5 =
= 6.6 =
= 10 =
10.2
11.8
14.9
1.9
2.9
26.6