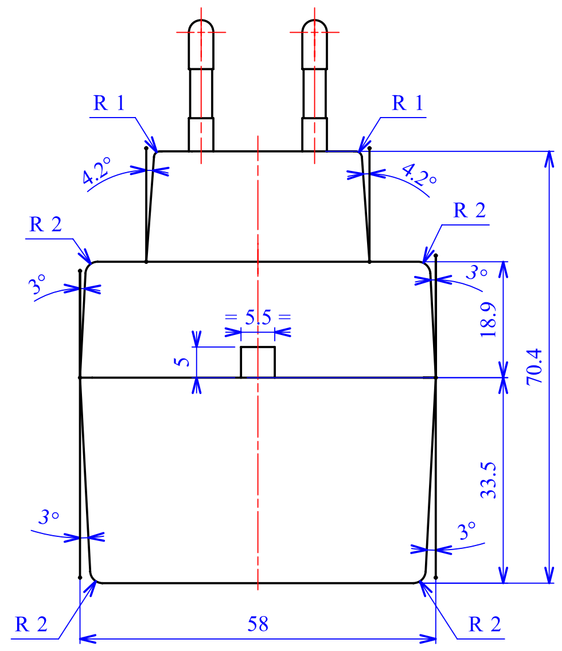

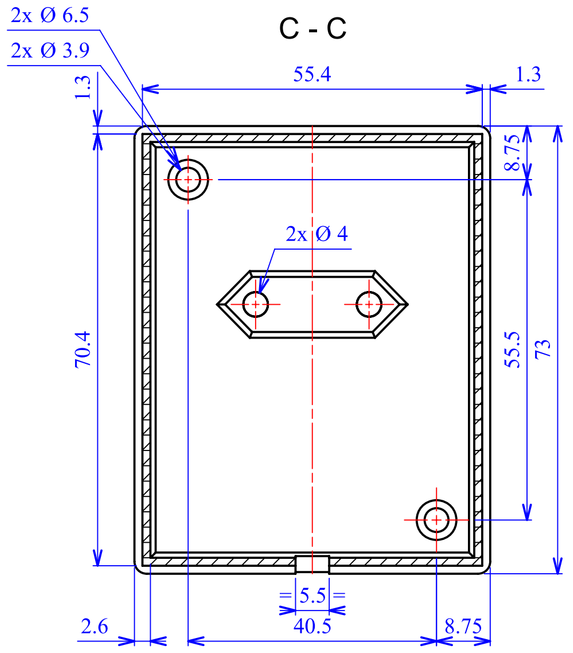

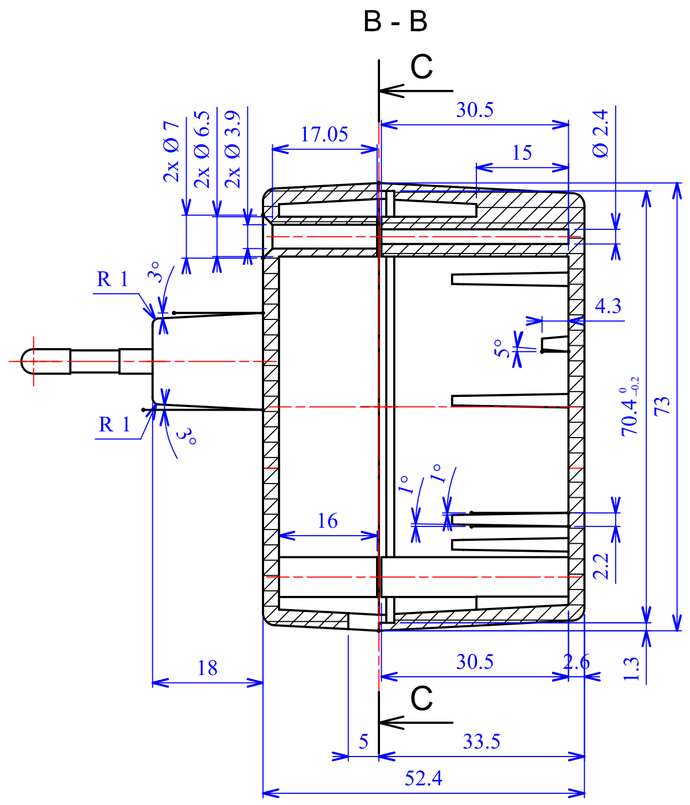

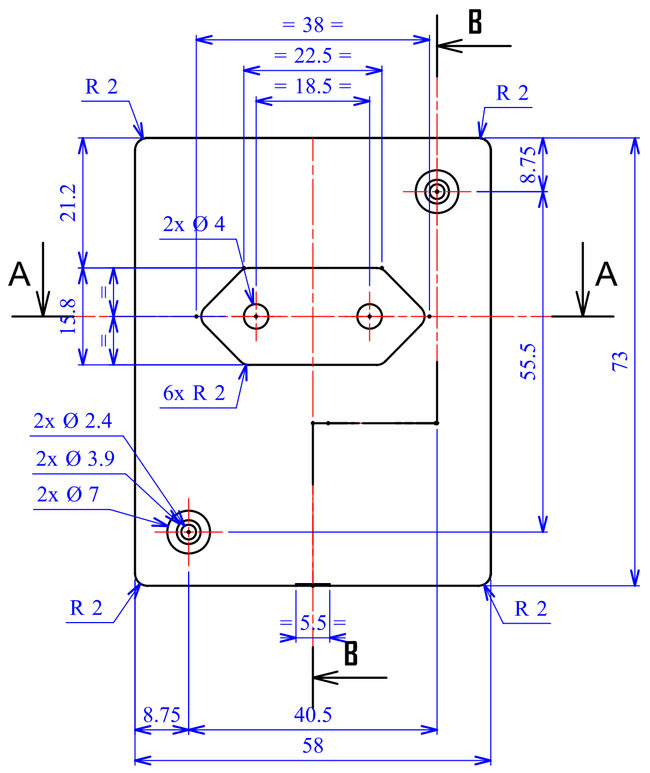

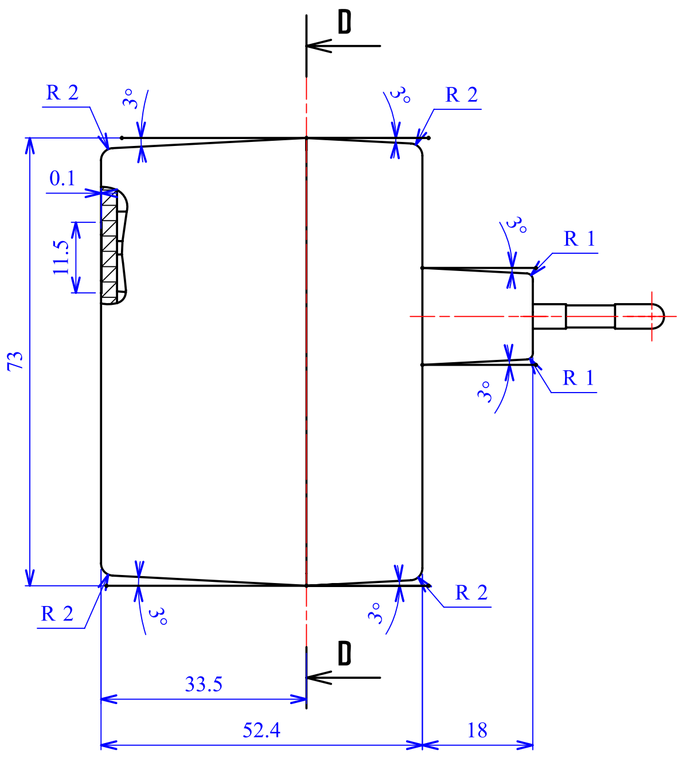

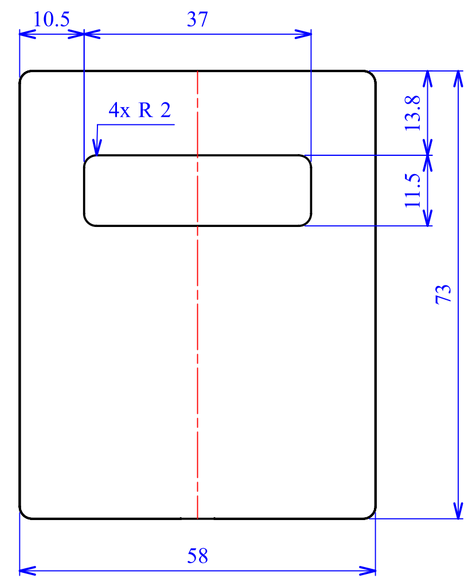

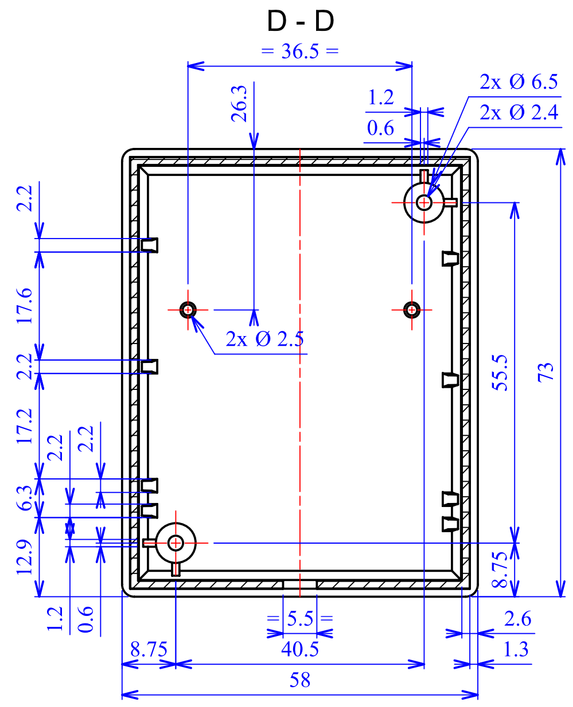

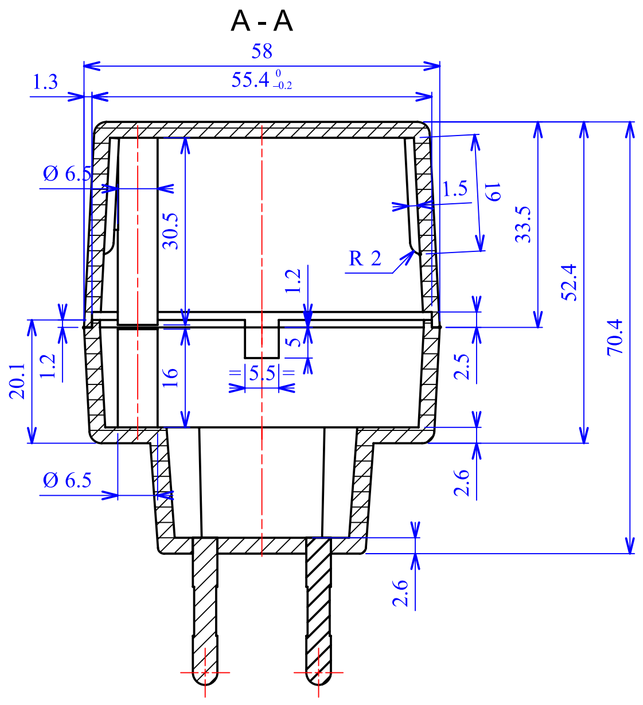

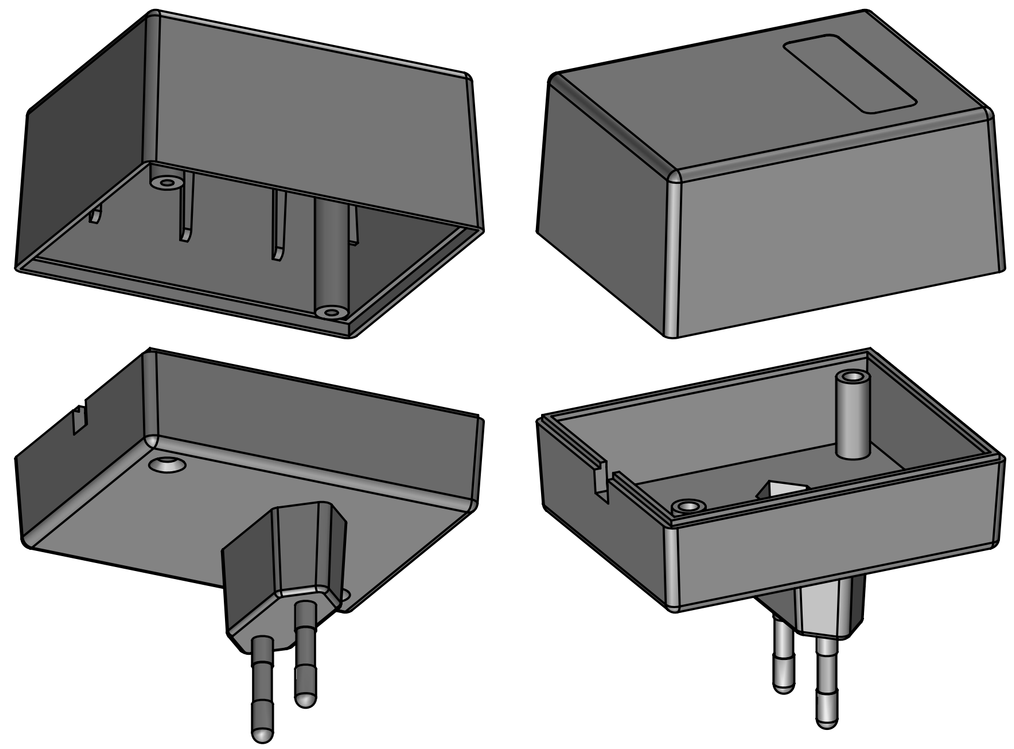

Model produktu	Z-10	
Format: A4	Materiał: Polystyrene (PS)	
Skala: 1:1	Tolerancja: +/- 0.1	

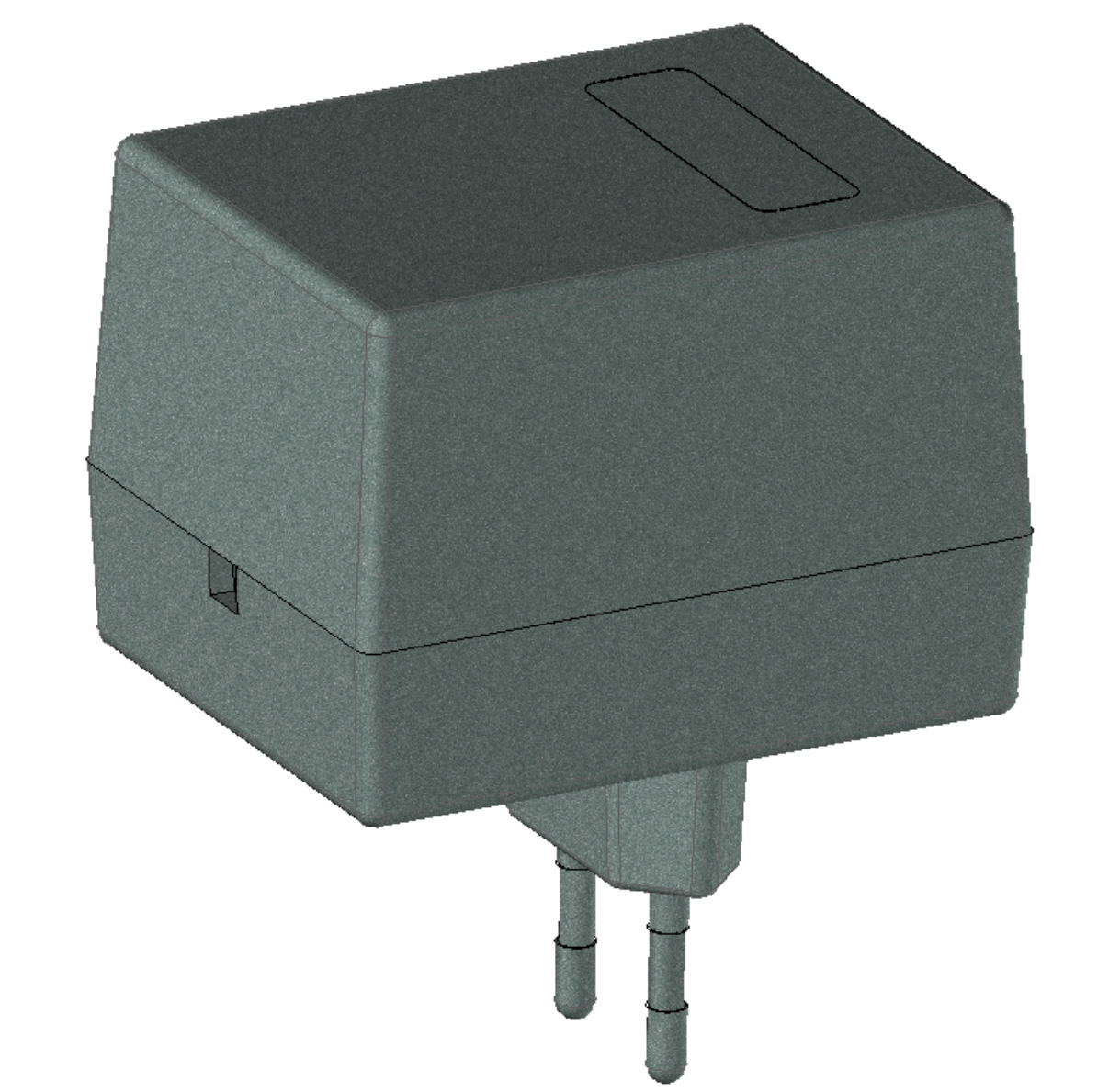

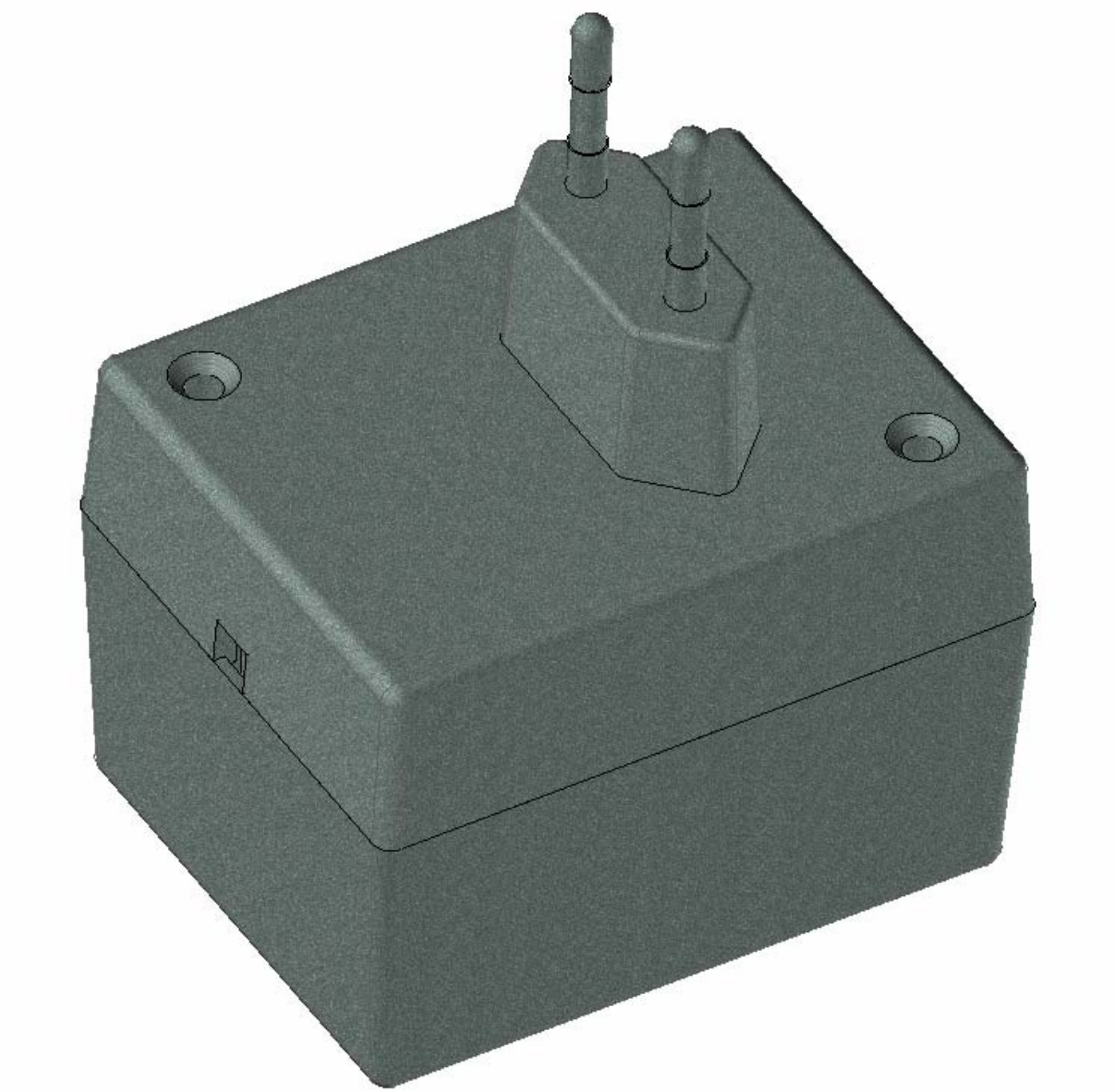

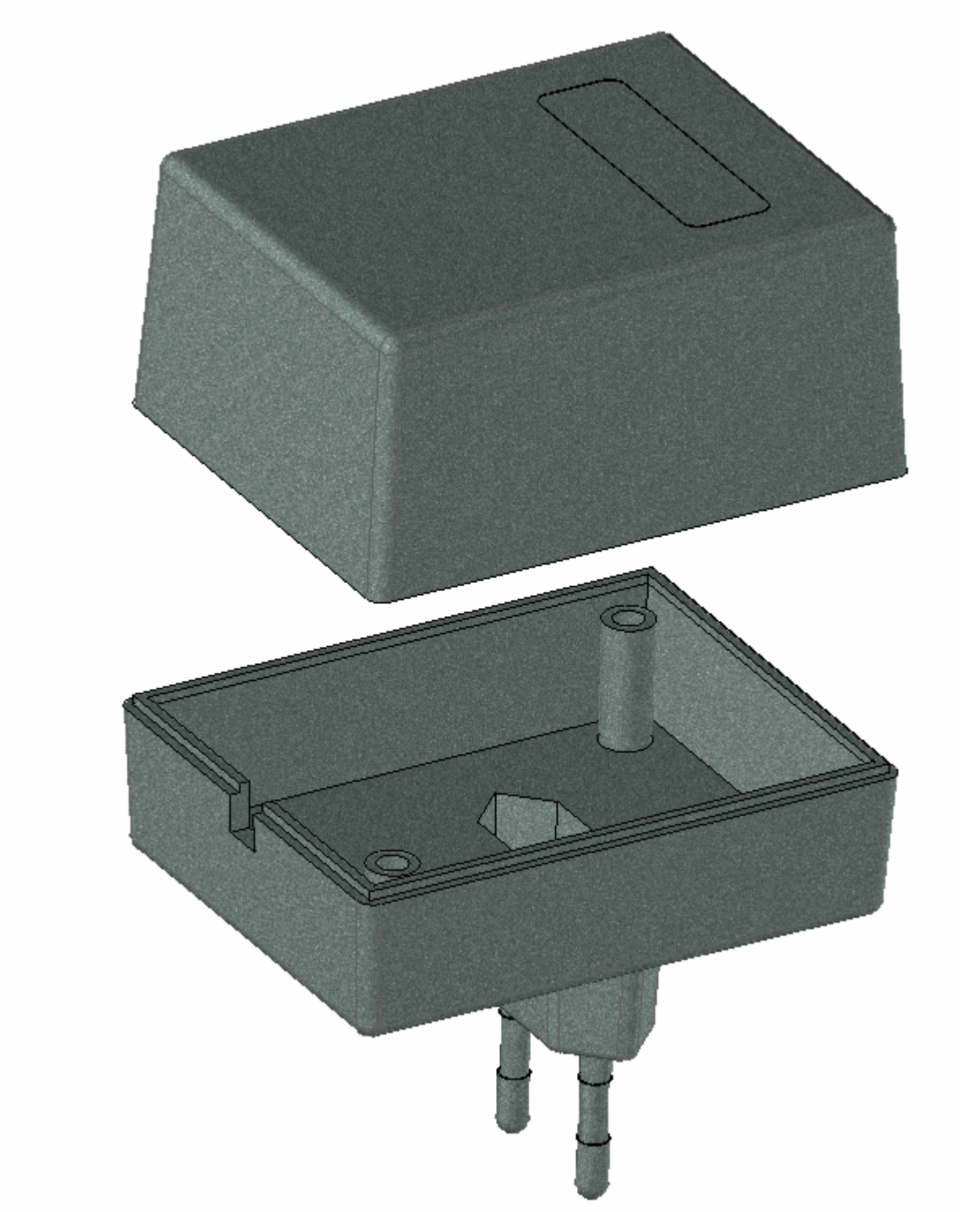

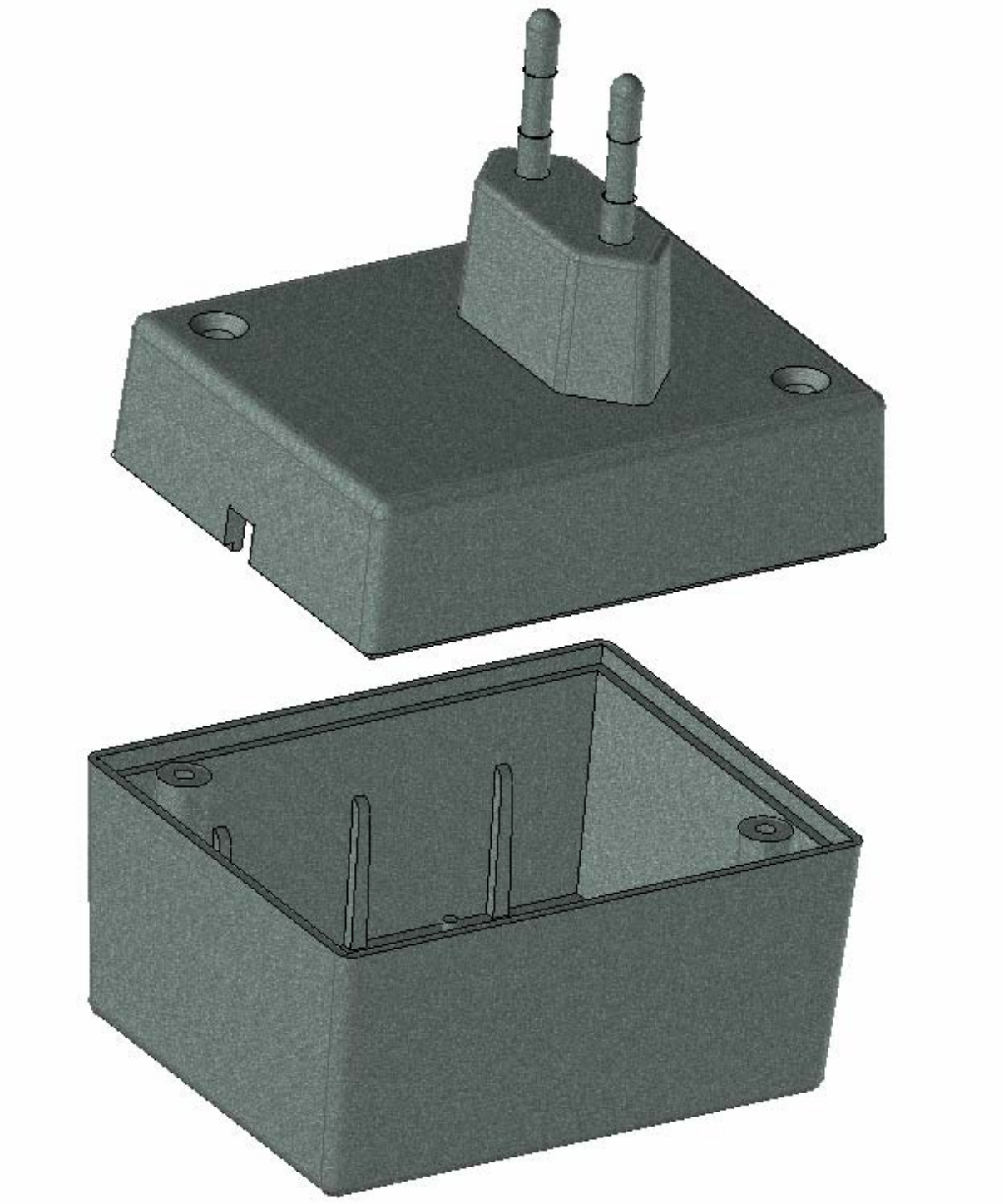

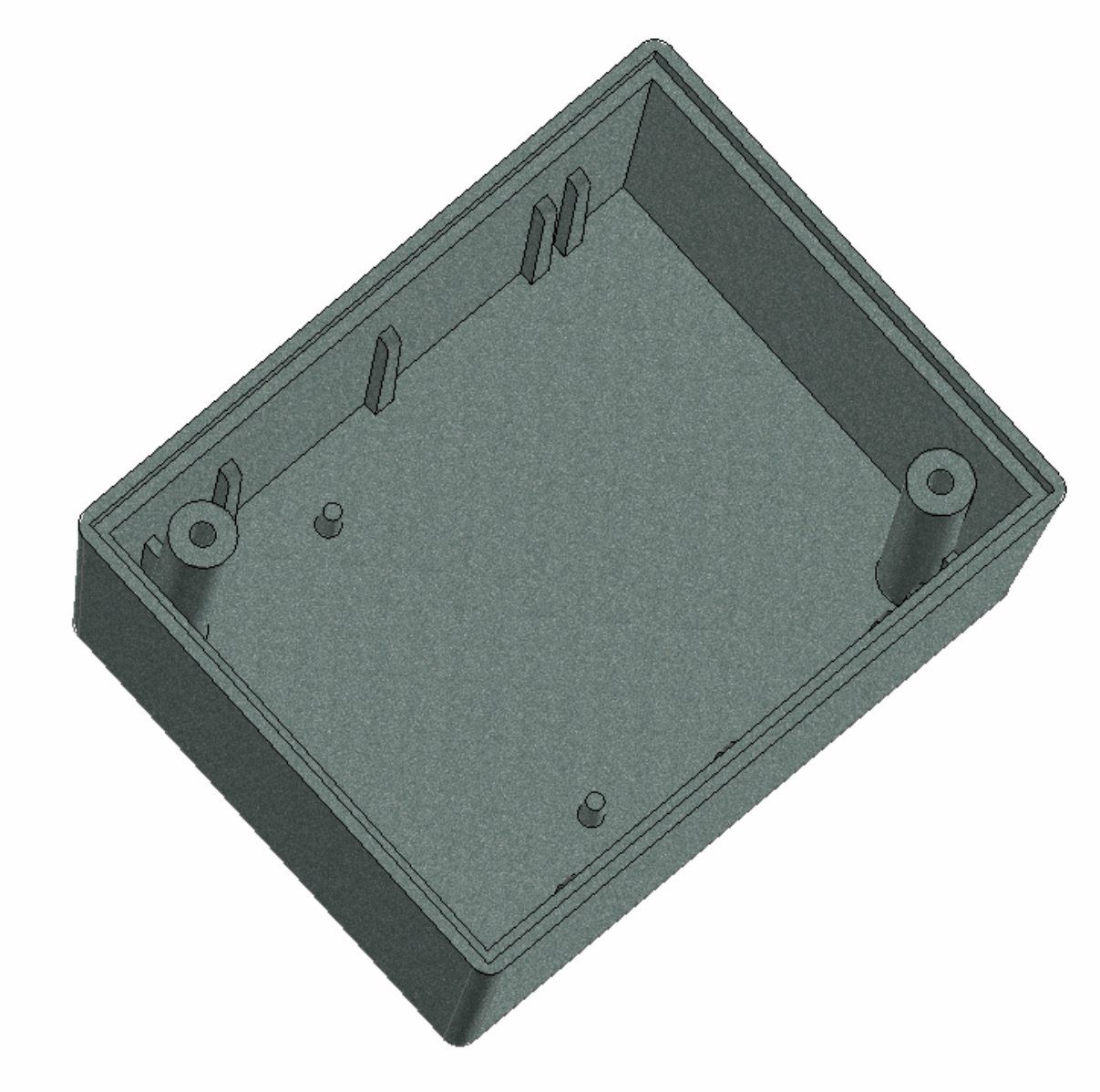

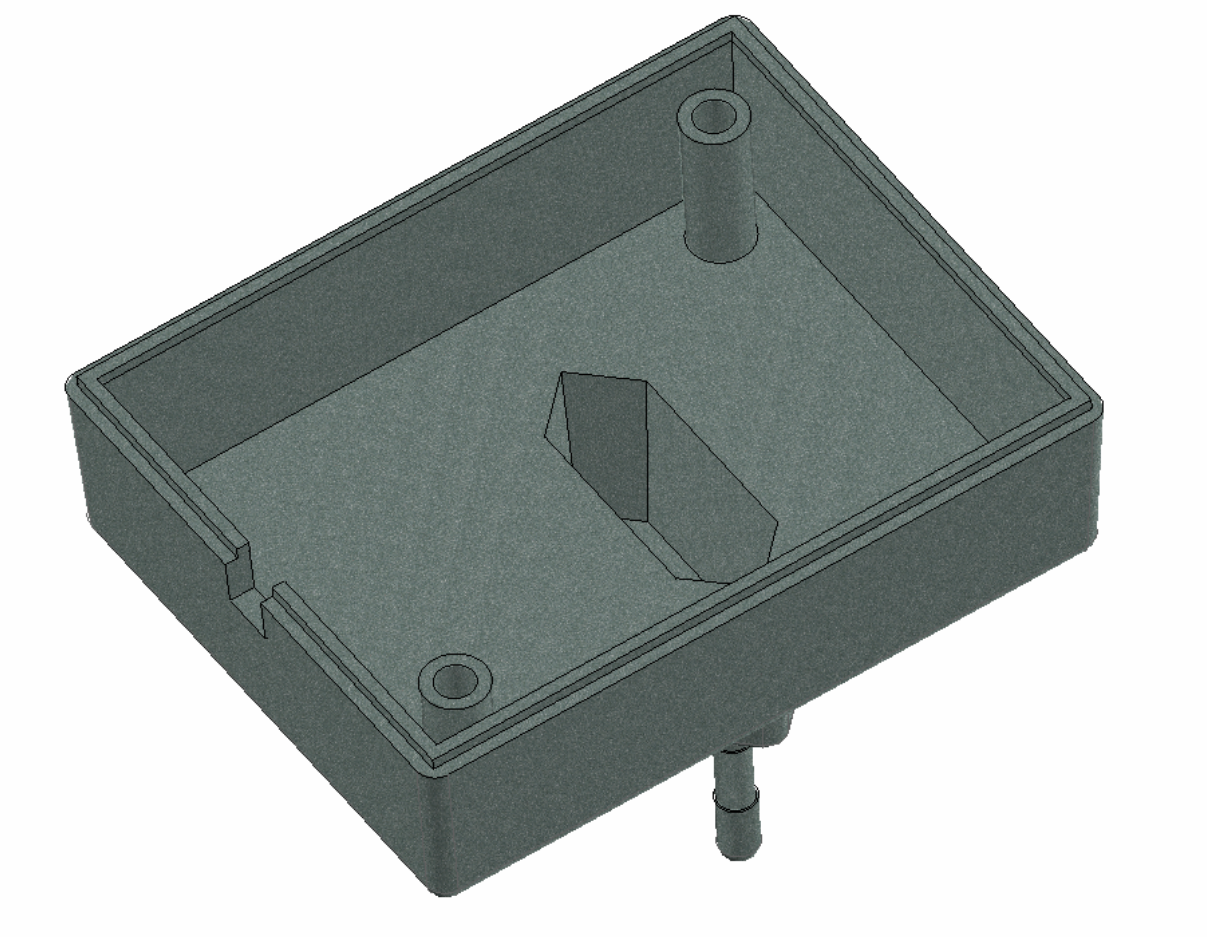

B - B

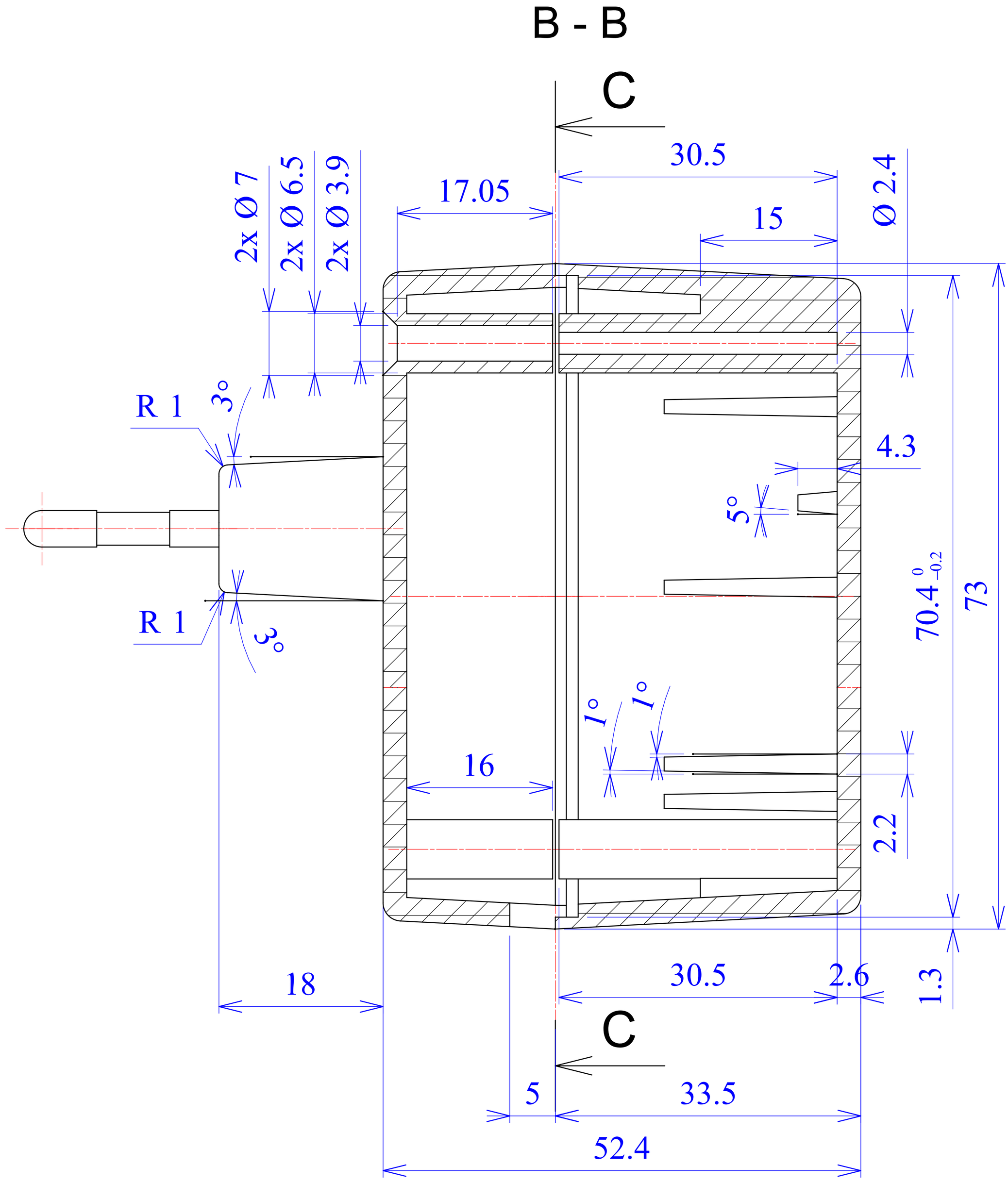
C
30.5
17.05
15
Ø 2.4
2x Ø 7
2x Ø 6.5
2x Ø 3.9
R 1
3°
4.3
5°
R 1
3°
1°
1°
70.4 0 -0.2
73
16
2.2
18
30.5
2.6
1.3
C
5
33.5
52.4

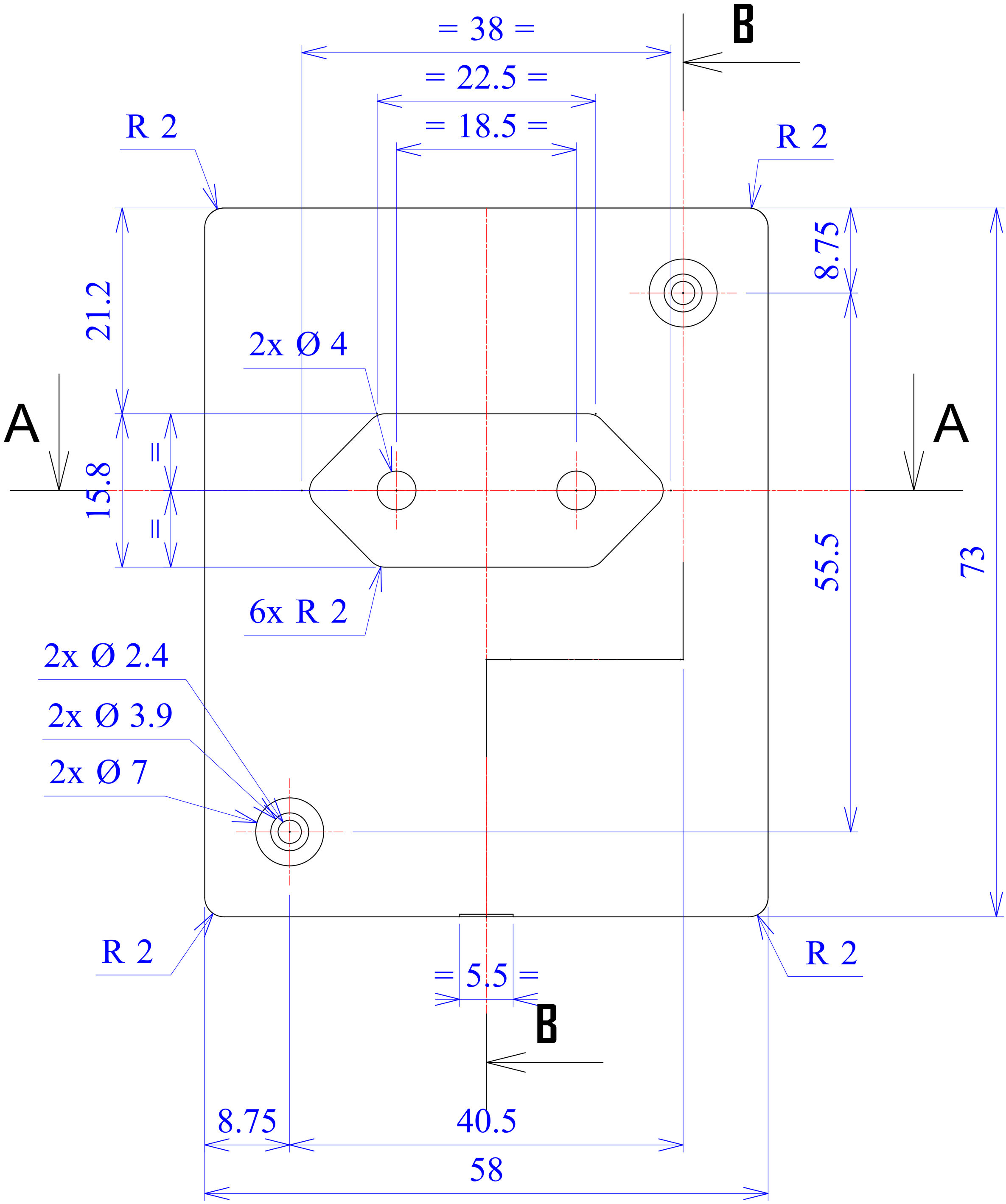
= 38 =
B
= 22.5 =
= 18.5 =
R 2
R 2
8.75
21.2
2x Ø 4
A
A
15.8
6x R 2
2x Ø 2.4
2x Ø 3.9
2x Ø 7
55.5
73
R 2
R 2
= 5.5 =
B
8.75
40.5
58

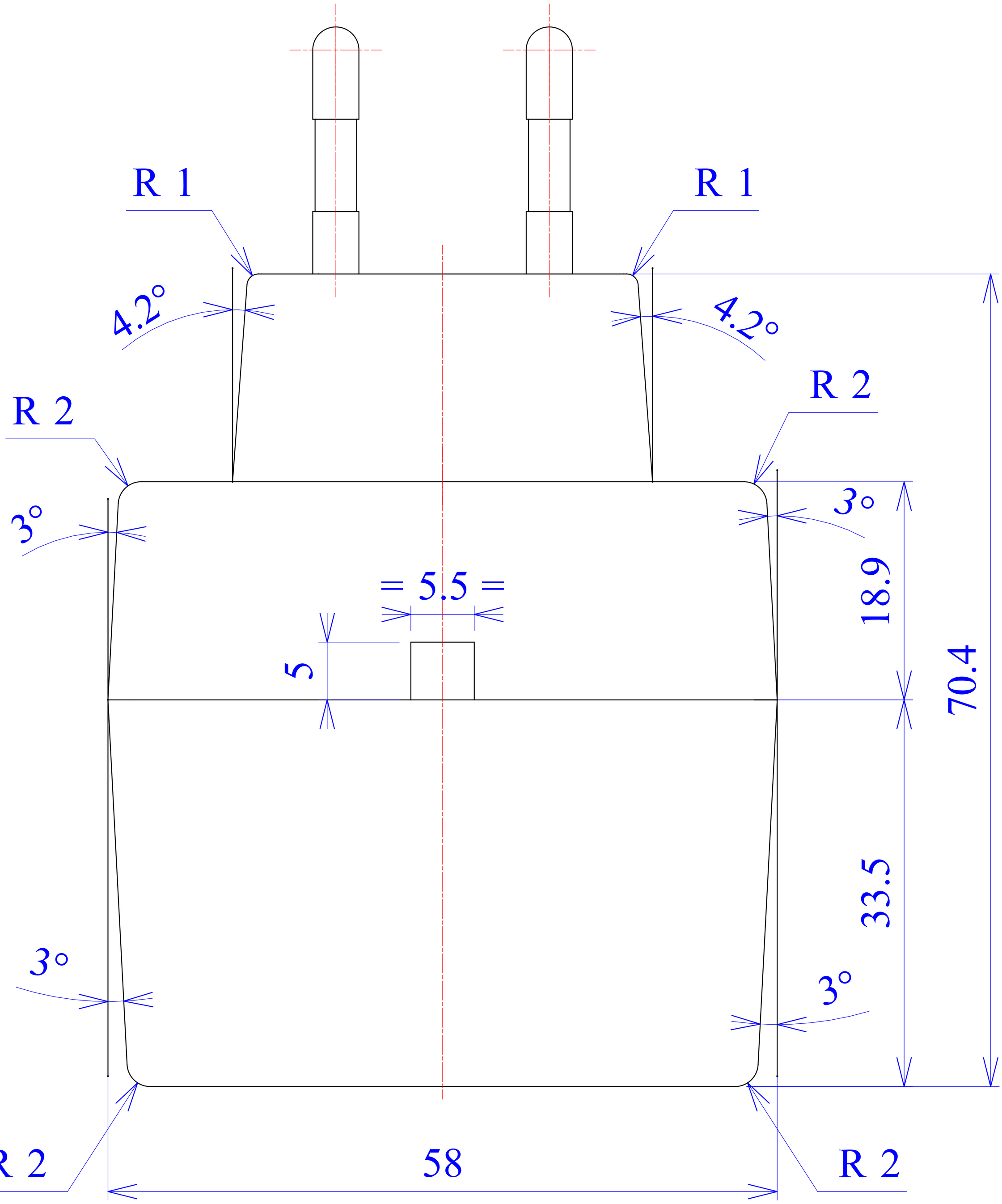
R 1
R 1
4.2°
4.2°
R 2
R 2
3°
3°
= 5.5 =
5
18.9
70.4
33.5
3°
3°
R 2
58
R 2

A - A

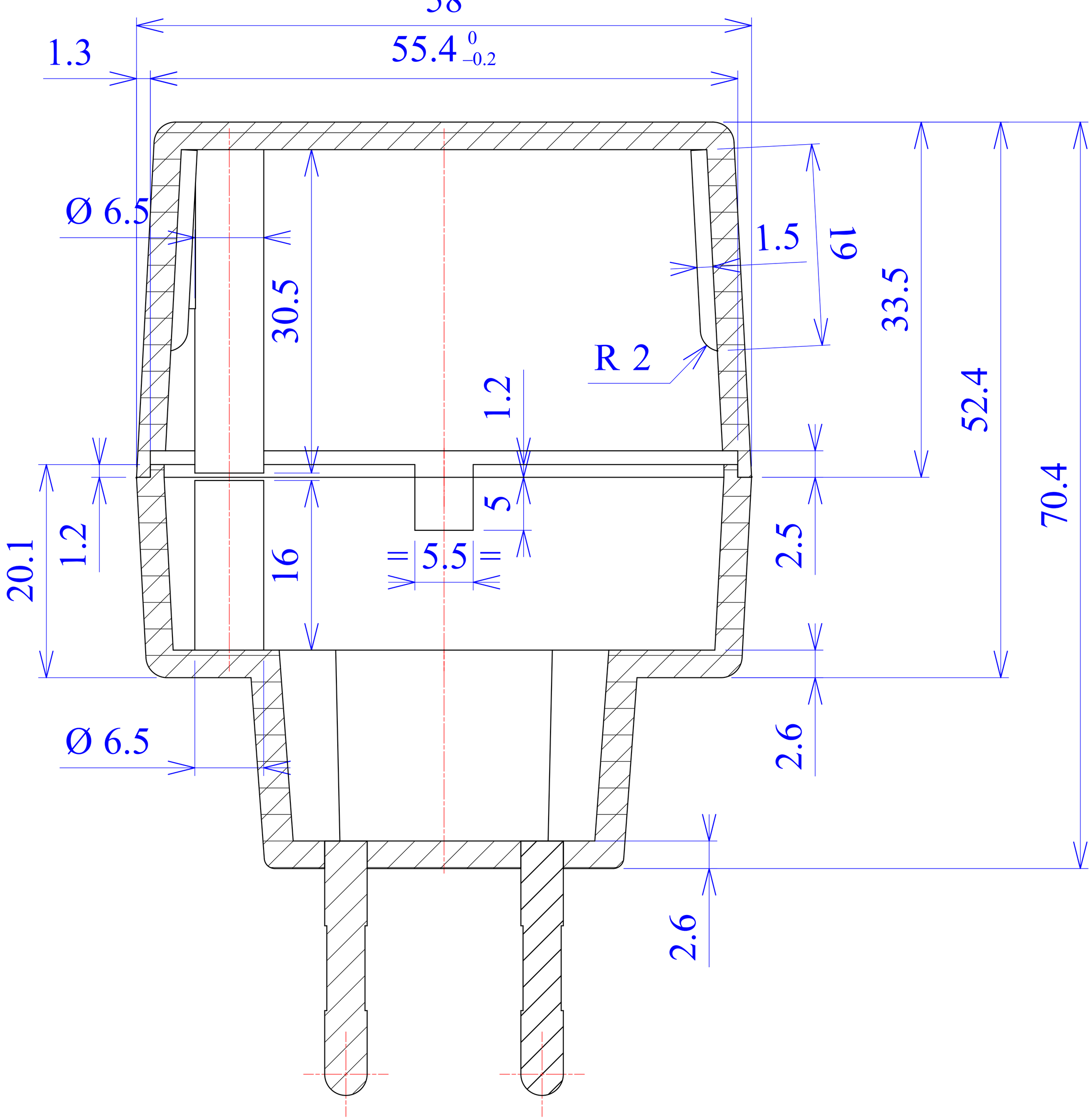
58
1.3
55.4 0 −0.2
Ø 6.5
30.5
1.5
19
33.5
52.4
70.4
R 2
1.2
5
5.5
16
20.1
1.2
2.5
2.6
Ø 6.5
2.6

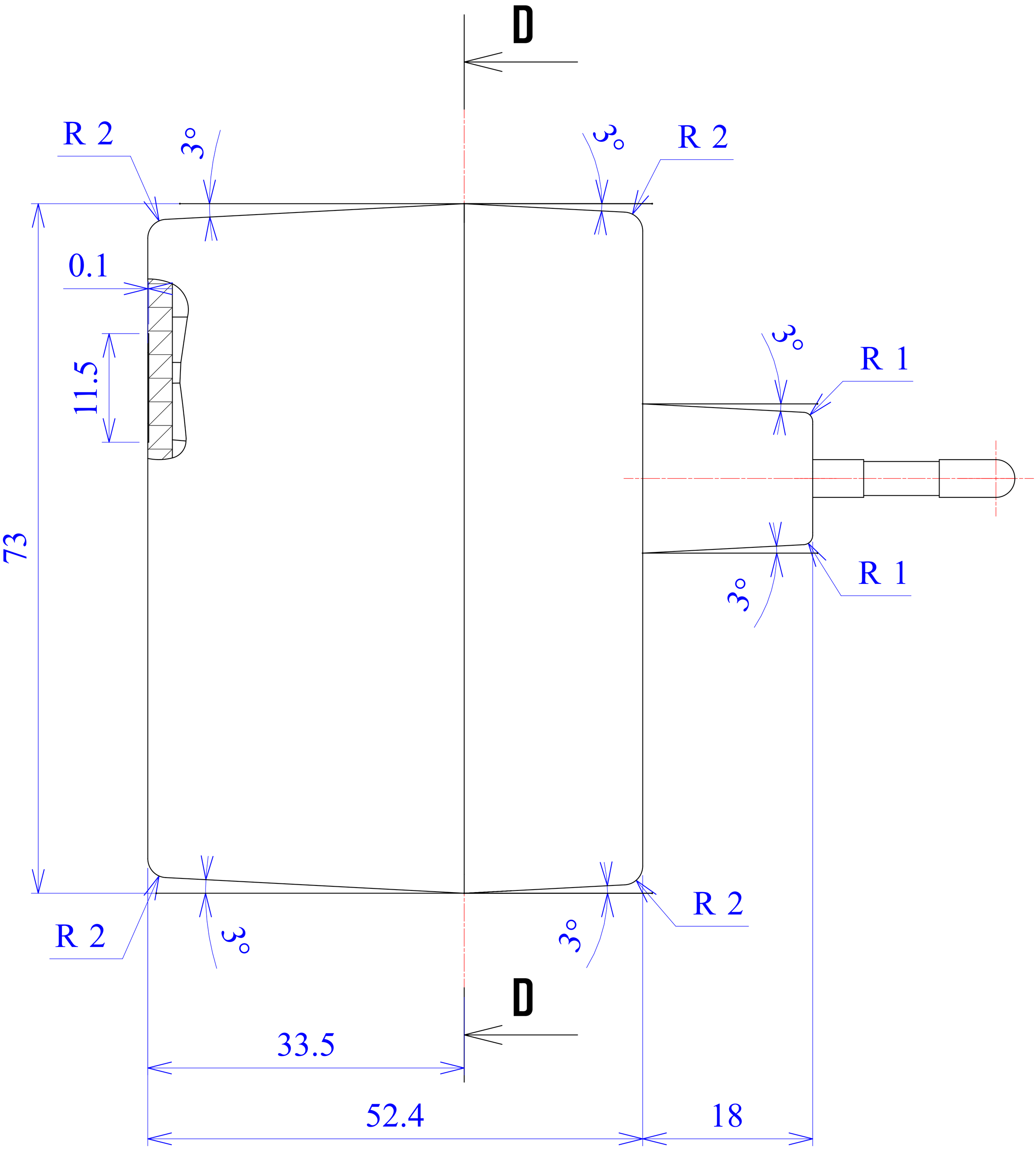
D
R 2
3°
3°
R 2
0.1
11.5
3°
R 1
3°
R 1
73
R 2
3°
3°
R 2
D
33.5
52.4
18

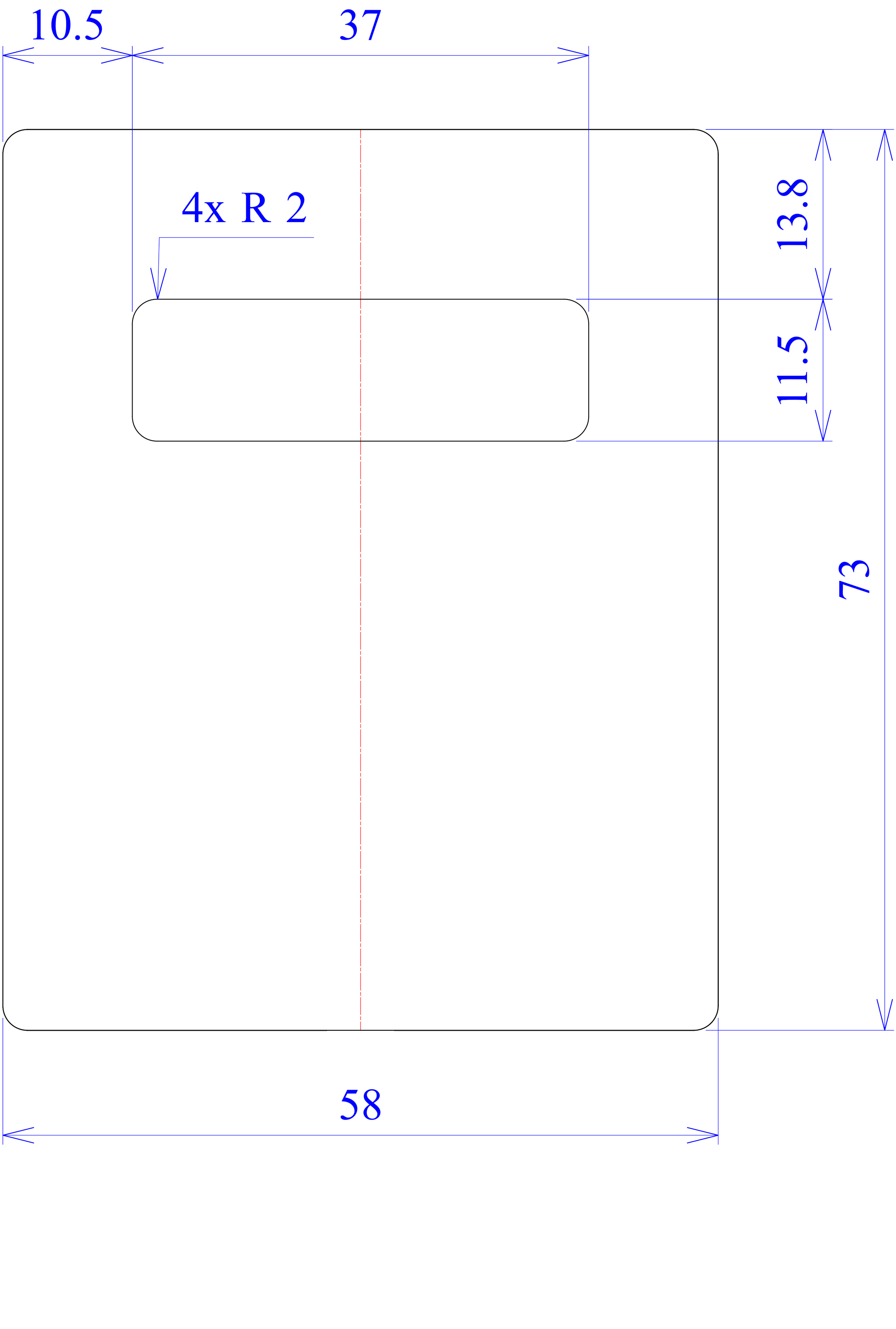
10.5
37
4x R 2
13.8
11.5
73
58

C - C

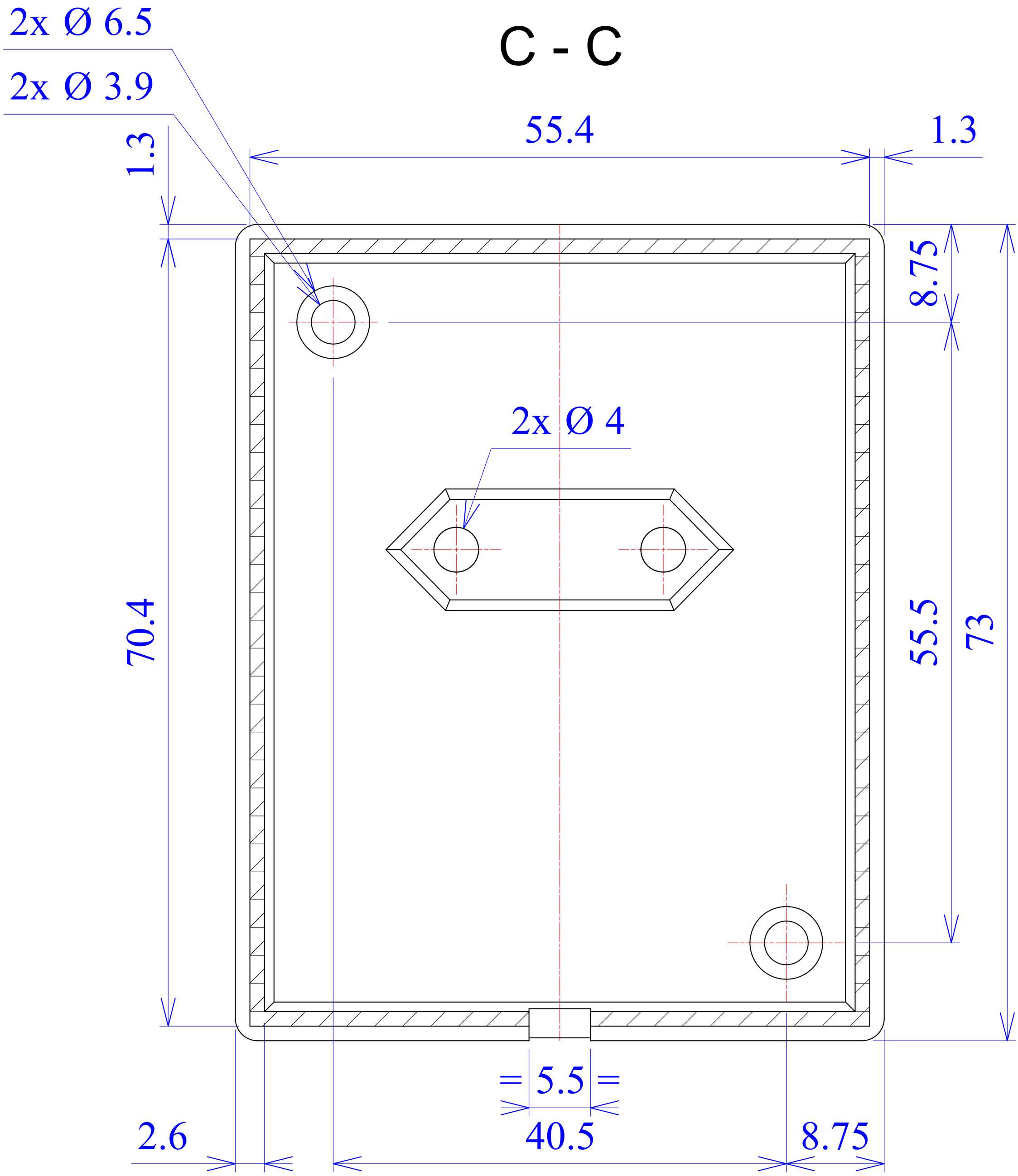

D - D

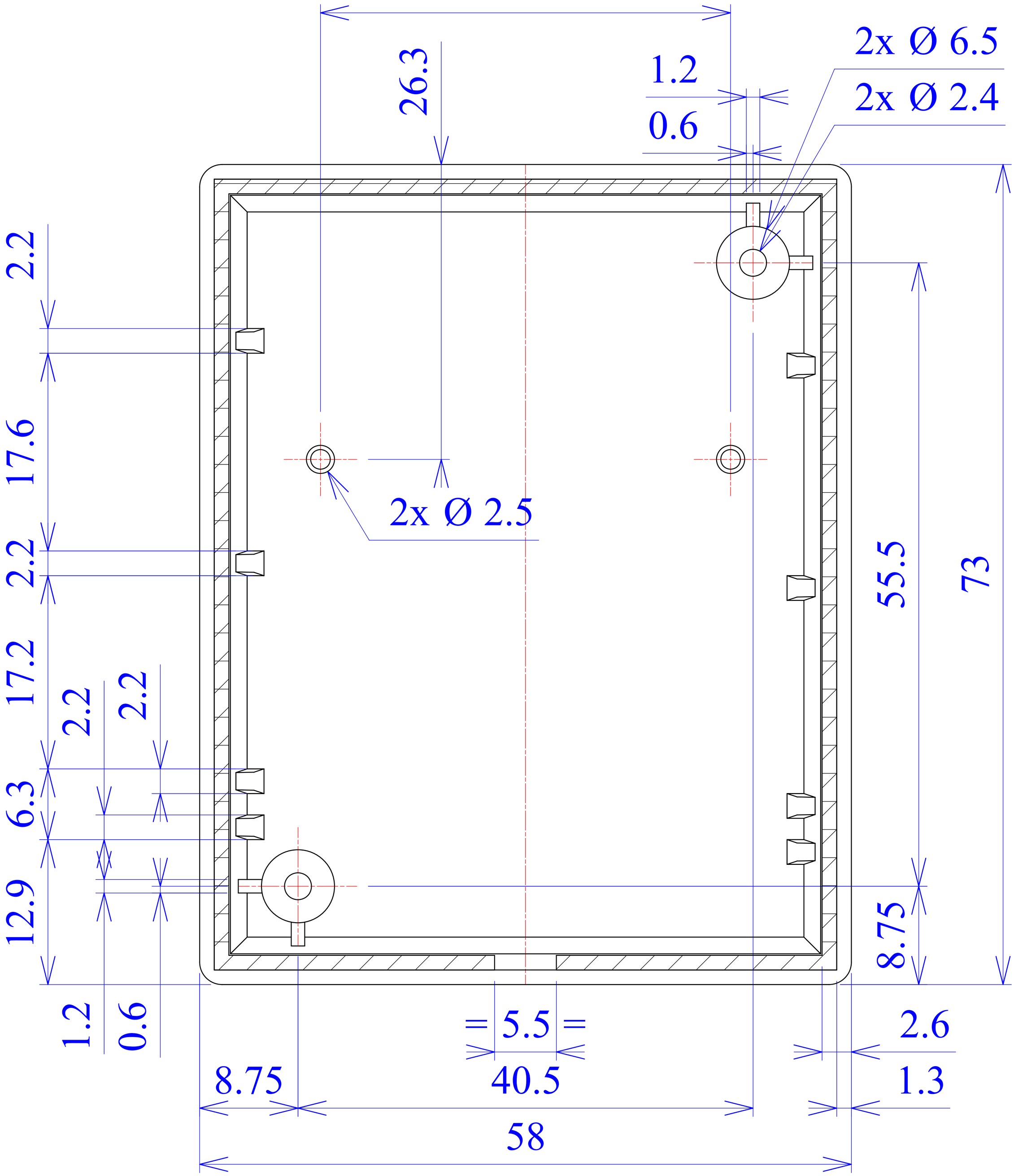
= 36.5 =
26.3
1.2
0.6
2x Ø 6.5
2x Ø 2.4
2.2
17.6
2.2
2x Ø 2.5
55.5
73
17.2
2.2
2.2
6.3
12.9
8.75
1.2
0.6
= 5.5 =
2.6
8.75
40.5
1.3
58