THIS DOCUMENT IS THE PROPERTY OF KEYSTONE ELECTRONICS CORP. AND SHALL NOT BE REPRODUCED, DISTRIBUTED OR USED AS A BASIS FOR MANUFACTURE WITHOUT PRIOR WRITTEN PERMISSION FROM KEYSTONE ELECTRONICS CORP.

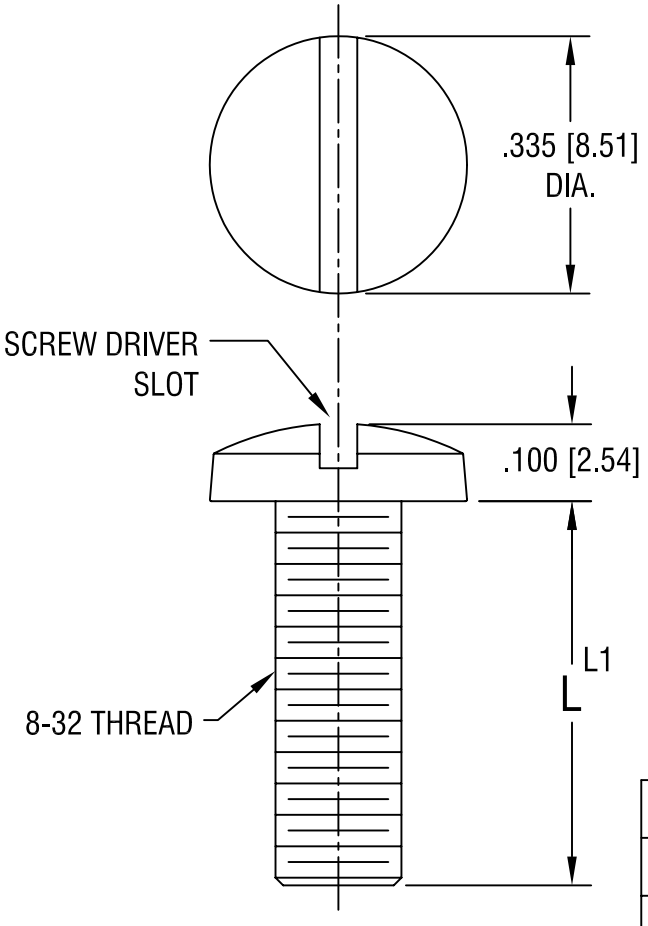

PART NO.	'L' DIM.	'L1' TOL. +0.0
9443	.250 [6.25]	-.020 [-0.50]
9444	.375 [9.53]	
9445	.500 [12.70]	
9446	.625 [15.88]	-.030 [-0.76]
9447	.750 [19.05]	
9448	1.000 [25.40]	
9449	1.250 [31.75]	-.060 [-1.52]

KEYSTONE ELECTRONICS CORP.
ASTORIA, N.Y. 11105-2017

PART NAME: 8-32 BINDING HEAD SCREW

MATERIAL: NYLON 6/6

FINISH: -

DRN BY: BOONE | DATE: 3.1.04

APP'D: LN | SCALE: 4X

TOLERANCES INCH [MM]
DECIMAL ± .010 [± 0.25]
ANGULAR ± 1°
UNLESS OTHERWISE SPECIFIED

CODE: C/M

DWG NO.: 9443-9449

DATE	DESCRIPTION	REV.