THIS DOCUMENT IS THE PROPERTY OF KEYSTONE ELECTRONICS CORP. AND SHALL NOT BE REPRODUCED, DISTRIBUTED OR USED AS A BASIS FOR MANUFACTURE WITHOUT PRIOR WRITTEN PERMISSION FROM KEYSTONE ELECTRONICS CORP.

ACTUAL SIZE

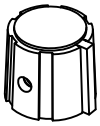

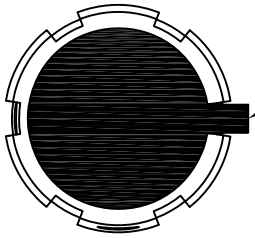

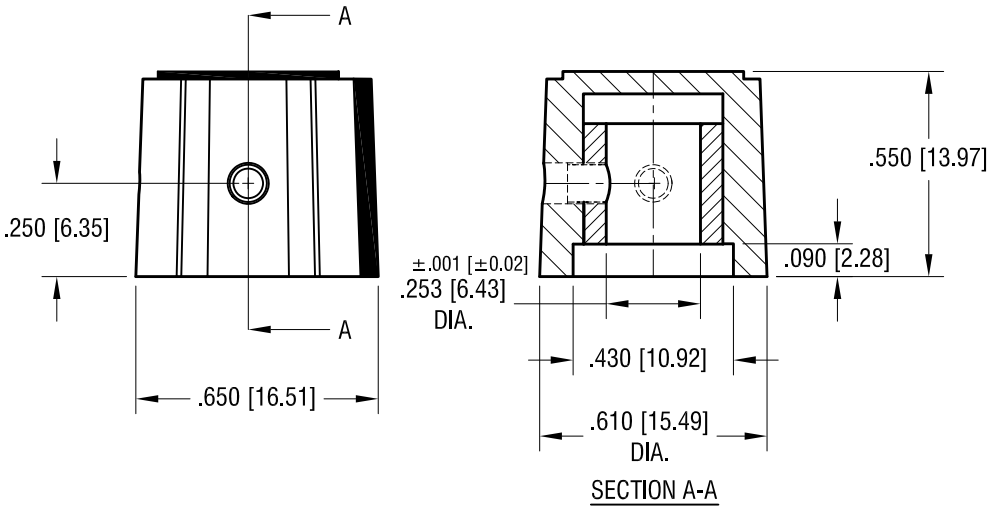

SECTION A-A

NOTES:

1. KNOB: MAT'L:
   OUTER SURFACE (FOR GRIPPING) -
   THERMOPLASTIC ELASTOMER (TPE)
   COLOR- BLACK
   INNER CORE- POLYPROPYLENE (PP)
   SEE COLOR CODE.
2. INSERT: MAT'L: BRASS, NICKEL PLATE
3. SCREW (2) PLS: MAT'L- STEEL
   FINISH: BLACK OXIDE

PART NO.	INNER COLOR
8570	YELLOW
8571	RED
8572	GRAY
8573	BLACK

DATE	DESCRIPTION	REV.

KEYSTONE ELECTRONICS CORP.

www.keyelco.com ● ASTORIA, N.Y. 11105-2017 ● Tel (718) 956-8900

PART NAME: SOFT- TOUCH KNOB			
MATERIAL: AS NOTED			
FINISH: AS NOTED	DRN BY: NT	DATE: 6.25.15	
	APP'D: LN	SCALE: 2.5X	
TOLERANCES INCH [MM] DECIMAL ± .010 [± 0.25] ANGULAR ± 1° UNLESS OTHERWISE SPECIFIED	CODE: C	DWG NO.: 8570- 8573	