THIS DOCUMENT IS THE PROPERTY OF KEYSTONE ELECTRONICS CORP. AND SHALL NOT BE REPRODUCED, DISTRIBUTED OR USED AS A BASIS FOR MANUFACTURE WITHOUT PRIOR WRITTEN PERMISSION FROM KEYSTONE ELECTRONICS CORP.

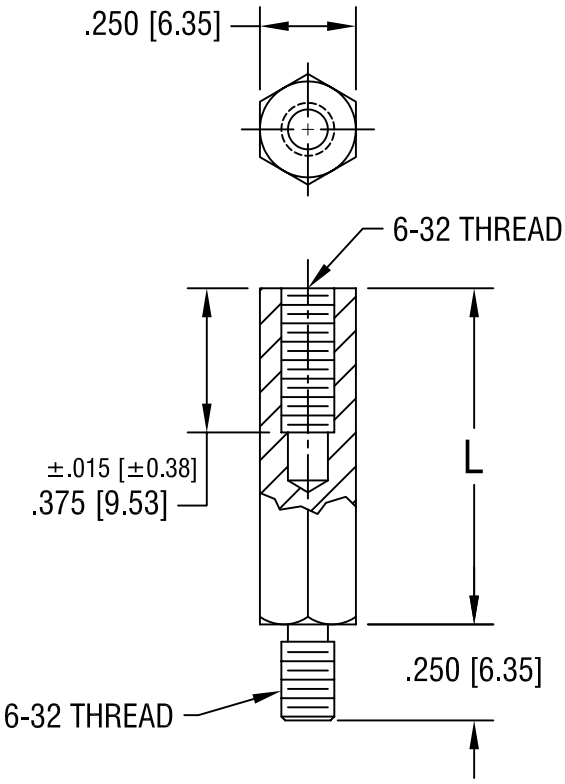

PART NO.	'L' DIM.
8417	.875 [22.23]
8418	1.000 [25.4]
8419	1.125 [28.58]

DATE	DESCRIPTION	REV.

KEYSTONE ELECTRONICS CORP.
ASTORIA, N.Y. 11105-2017

PART NAME: HEX M/F STANDOFF

MATERIAL: ALUMINUM

FINISH: CLEAR IRIDITE

DRN BY: BOONE | DATE: 2.10.98

APP'D: | SCALE: 2X

TOLERANCES INCH [MM]
DECIMAL ± .005 [± 0.15]
ANGULAR ± 1°
UNLESS OTHERWISE SPECIFIED

CODE: C/M

DWG NO.: 8417-8419