THIS DOCUMENT IS THE PROPERTY OF KEYSTONE ELECTRONICS CORP. AND SHALL NOT BE REPRODUCED, DISTRIBUTED OR USED AS A BASIS FOR MANUFACTURE WITHOUT PRIOR WRITTEN PERMISSION FROM KEYSTONE ELECTRONICS CORP.

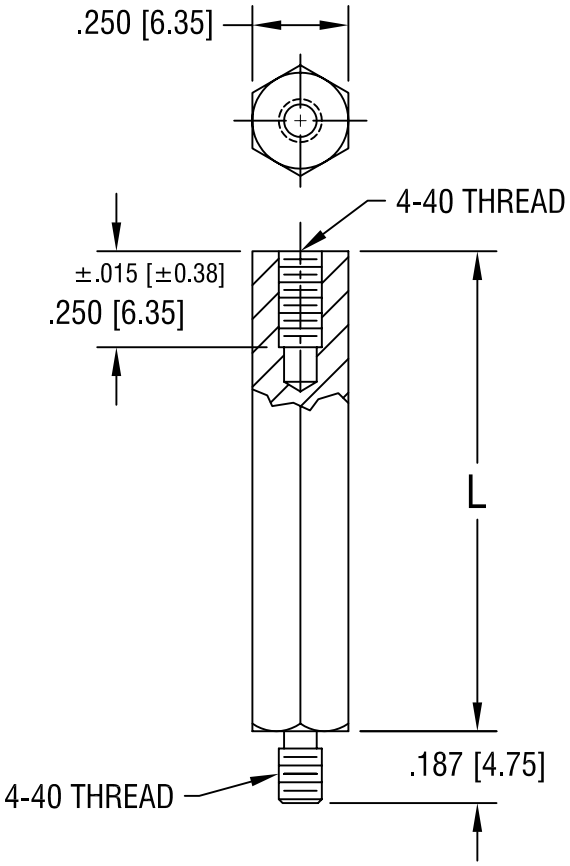

PART NO.	'L' DIM.
8407	1.250 [31.75]
8408	1.375 [34.93]
8409	1.500 [38.10]
8410	1.625 [41.28]
8411	1.750 [44.45]
8412	2.000 [50.80]

DATE	DESCRIPTION	REV.
3.3.97	CHANGE AS PER ECR 97-019	A

KEYSTONE ELECTRONICS CORP.
ASTORIA, N.Y. 11105-2017

PART NAME: HEX M/F STANDOFF

MATERIAL: ALUMINUM

FINISH: CLEAR IRIDITE

DRN BY: BOONE | DATE: 4.26.94

APP'D: LN | SCALE: 2X

TOLERANCES INCH [MM]
DECIMAL ± .005 [± 0.15]
ANGULAR ± 1°
UNLESS OTHERWISE SPECIFIED

CODE: C/M

DWG NO.: 8407-8412