THIS DOCUMENT IS THE PROPERTY OF KEYSTONE ELECTRONICS CORP. AND SHALL NOT BE REPRODUCED, DISTRIBUTED OR USED AS A BASIS FOR MANUFACTURE WITHOUT PRIOR WRITTEN PERMISSION FROM KEYSTONE ELECTRONICS CORP.

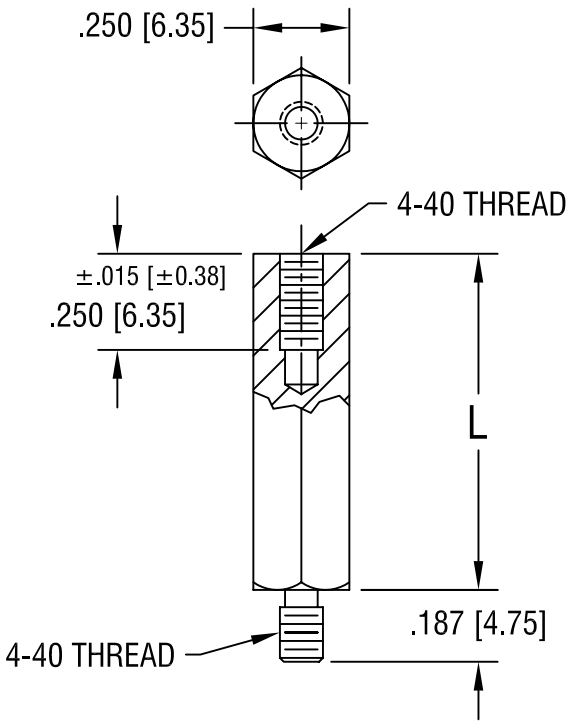

PART NO.	'L' DIM.
8401	.500 [12.70]
8402	.625 [15.87]
8403	.750 [19.05]
8404	.875 [22.22]
8405	1.000 [25.4]
8406	1.125 [28.57]

DATE	DESCRIPTION	REV.
3.3.97	CHANGE AS PER ECR 97-019	A

KEYSTONE ELECTRONICS CORP.
ASTORIA, N.Y. 11105-2017

PART NAME: HEX M/F STANDOFF

MATERIAL: ALUMINUM

FINISH: CLEAR IRIDITE

DRN BY: BOONE | DATE: 4.26.94

APP'D: LN | SCALE: 2X

TOLERANCES INCH [MM]
DECIMAL ± .005 [± 0.15]
ANGULAR ± 1°
UNLESS OTHERWISE SPECIFIED

CODE: C/M

DWG NO.: 8401-8406