THIS DOCUMENT IS THE PROPERTY OF KEYSTONE ELECTRONICS CORP. AND SHALL NOT BE REPRODUCED, DISTRIBUTED OR USED AS A BASIS FOR MANUFACTURE WITHOUT PRIOR WRITTEN PERMISSION FROM KEYSTONE ELECTRONICS CORP.

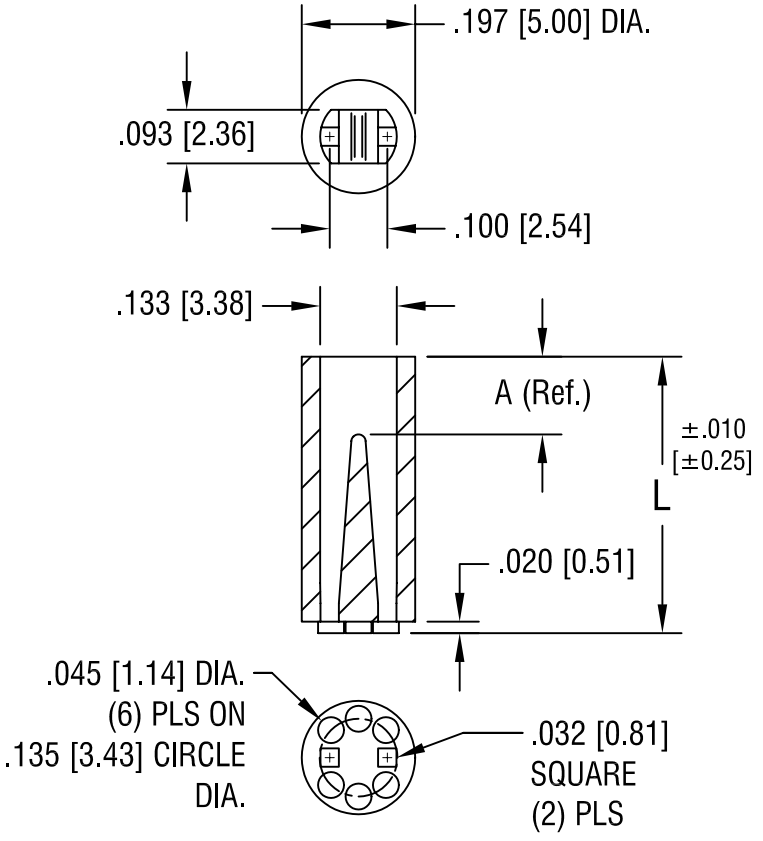

PART NO.	'L' DIM.	'A' DIM. REF.
7351	.120 [3.05]	.045 [1.14]
7352	.140 [3.56]	.065 [1.65]
7353	.160 [4.06]	.085 [2.16]
7354	.180 [4.57]	.105 [2.67]
7355	.200 [5.08]	.125 [3.18]
7356	.220 [5.59]	.145 [3.68]
7357	.240 [6.10]	.045 [1.14]
7358	.250 [6.35]	.060 [1.52]
7359	.260 [6.60]	.065 [1.65]
7360	.280 [7.11]	.090 [2.29]
7361	.300 [7.62]	.110 [2.79]
7362	.320 [8.13]	.120 [3.05]
7363	.340 [8.64]	.140 [3.56]
7364	.350 [8.89]	.150 [3.81]
7365	.360 [9.14]	.160 [4.06]
7366	.380 [9.65]	.060 [1.52]

DATE	DESCRIPTION	REV.
5.4.99	CHANGE AS PER ECN 99-044	B
2.10.99	CHANGE AS PER ECN 99-022	A

KEYSTONE ELECTRONICS CORP.
ASTORIA, N.Y. 11105-2017

PART NAME: BI-LEAD LED SPACER, T-1

MATERIAL: NYLON 6/6

FINISH: -

DRN BY: BOONE | DATE: 10.8.96

APP'D: LN | SCALE: 3X

TOLERANCES INCH [MM]
DECIMAL ± .005 [± 0.15]
ANGULAR ± 1°
UNLESS OTHERWISE SPECIFIED

CODE: C/M

DWG NO.: 7351-7366