PART NO.	'L' DIM.	'A' DIM. REF.
7030	.120 [3.05]	.060 [1.52]
7031	.140 [3.55]	
7032	.160 [4.06]	
7033	.180 [4.57]	
7034	.200 [5.08]	
7035	.220 [5.58]	
7036	.240[6.09]	
7037	.250 [6.35]	.185 [4.70]
7038	.260 [6.60]	
7039	.280 [7.11]	
7040	.300 [7.62]	
7041	.320 [8.12]	
7042	.340 [8.63]	
7043	.350 [8.90]	
7044	.360 [9.14]	
7045	.380 [9.65]	.310 [7.87]
7046	.400 [10.15]	
7047	.420 [10.66]	
7048	.440 [11.17]	
7049	.450 [11.42]	
7050	.460 [11.68]	
7051	.480 [12.18]	

PART NO.	'L' DIM.	'A' DIM. REF.
7052	.500 [12.70]	.435 [11.04]
7053	.550 [14.00]	
7054	.600 [15.23]	
7055	.650 [16.50]	.650 [14.22]
7056	.700 [17.77]	
7057	.750 [19.04]	.690 [17.52]
7058	.800 [20.31]	
7059	.850[21.68]	
7060	.900[22.85]	
7061	.925[23.48]	

DATE	DESCRIPTION	REV.
4.04.13	CHANGE AS PER ECN 13–035	A

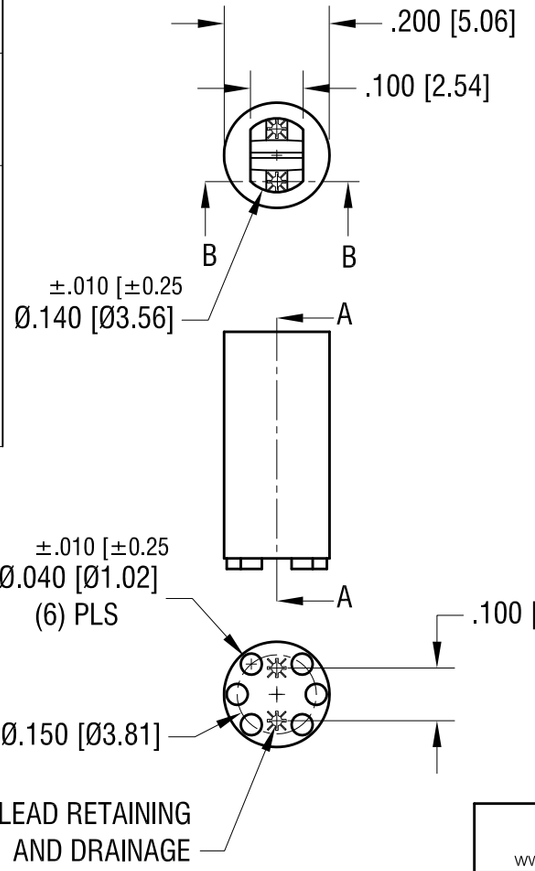

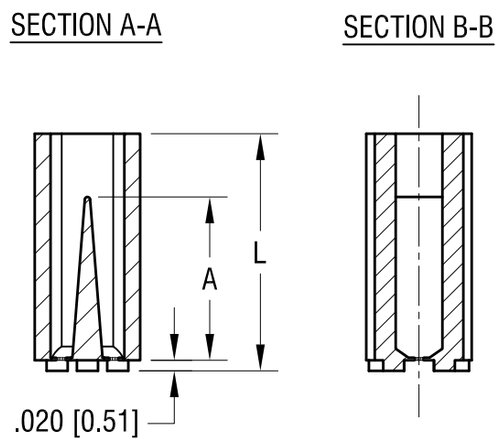

ACTUAL SIZE

P/N 7052

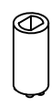

THIS DOCUMENT IS THE PROPERTY OF KEYSTONE ELECTRONICS CORP. AND SHALL NOT BE REPRODUCED, DISTRIBUTED OR USED AS A BASIS FOR MANUFACTURE WITHOUT PRIOR WRITTEN PERMISSION FROM KEYSTONE ELECTRONICS CORP.

KEYSTONE ELECTRONICS CORP.
www.keyelco.com • ASTORIA, N.Y. 11105-2017 • Tel (718) 956-8900

PART NAME: SELF-RETAINING LED MOUNT

MATERIAL: NYLON 6/6

FINISH: -

DRN BY: NT | DATE: 10.07.10

APP'D: LN | SCALE: 3X

TOLERANCES INCH [MM]
DECIMAL ± .005 [± 0.13]
ANGULAR ± 1°
UNLESS OTHERWISE SPECIFIED

CODE: C

DWG NO. 7030 - 7061