THIS DOCUMENT IS THE PROPERTY OF KEYSTONE ELECTRONICS CORP. AND SHALL NOT BE REPRODUCED, DISTRIBUTED OR USED AS A BASIS FOR MANUFACTURE WITHOUT PRIOR WRITTEN PERMISSION FROM KEYSTONE ELECTRONICS CORP.

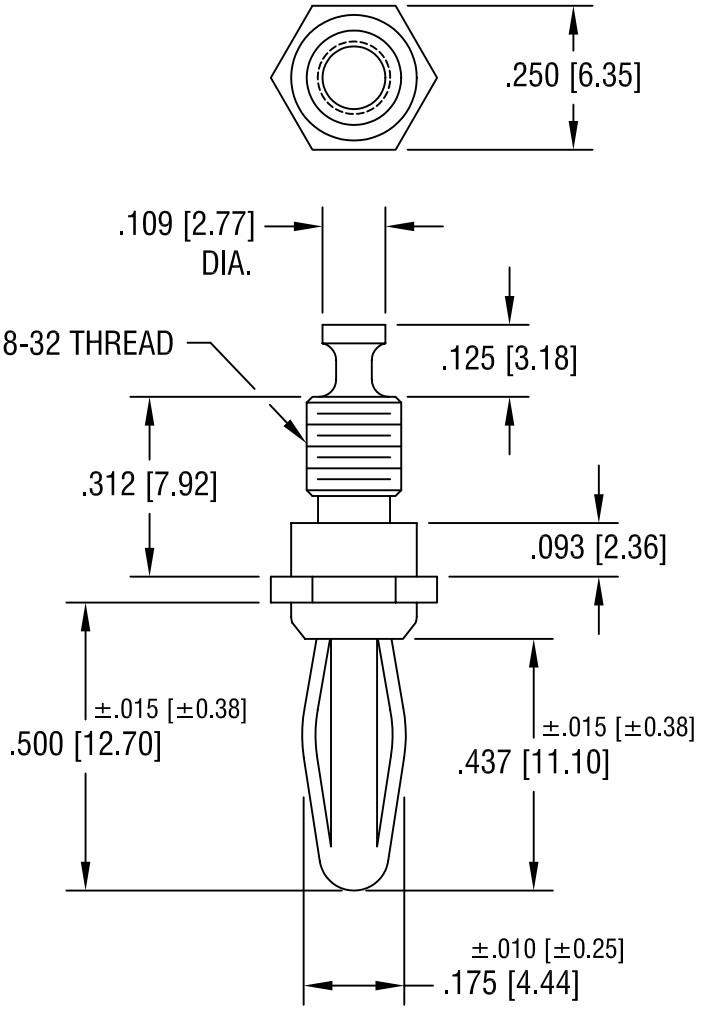

NOTES:

1. SPRING: MAT'L - BERYLLIUM COPPER
   BODY: MAT'L - BRASS

DATE	DESCRIPTION	REV.
2.20.03	CHANGE AS PER ECN 03-018	A

KEYSTONE ELECTRONICS CORP.
ASTORIA, N.Y. 11105-2017

PART NAME: BANANA PLUG			
MATERIAL: AS NOTED			
FINISH: NICKEL PLATE	DRN BY: BOONE	DATE: 9.19.95	
	APP'D:	SCALE: 3X	
TOLERANCES INCH [MM] DECIMAL ± .005 [± 0.15] ANGULAR ± 1° UNLESS OTHERWISE SPECIFIED	CODE: C	DWG NO.: 652	