THIS DOCUMENT IS THE PROPERTY OF KEYSTONE ELECTRONICS CORP. AND SHALL NOT BE REPRODUCED, DISTRIBUTED OR USED AS A BASIS FOR MANUFACTURE WITHOUT PRIOR WRITTEN PERMISSION FROM KEYSTONE ELECTRONICS CORP.

ACTUAL SIZE

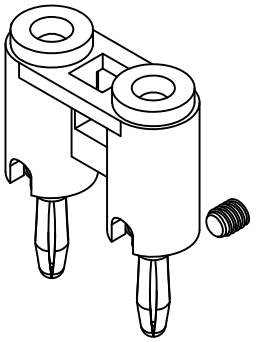

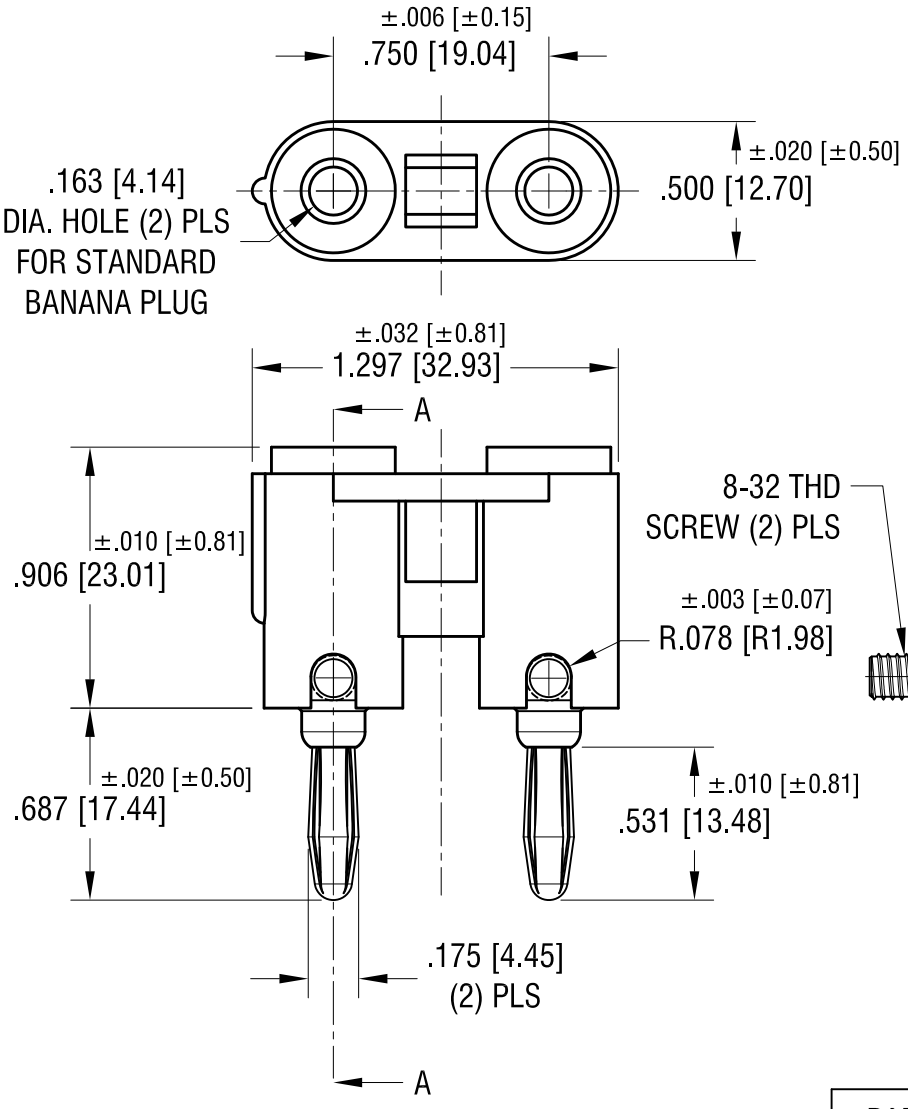

SECTION A-A

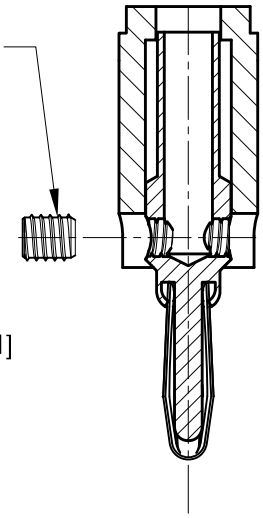

NOTES:

1. SPRING: MAT'L - NICKEL SILVER
2. BODY: MAT'L - BRASS
   FINISH - NICKEL PLATE
3. HANDLE: MAT'L - NYLON
4. 8-32 SCREW : MAT'L- STEEL
   FINISH - ZINC PLATE
   SCREW SUPPLIED LOOSE

PART NO.	COLOR
6088	RED
6089	BLACK

DATE	DESCRIPTION	REV.
4.02.13	CHANGE AS PER ECN 130–033	A

KEYSTONE ELECTRONICS CORP.

www.keyelco.com • ASTORIA, N.Y. 11105-2017 • Tel (718) 956-8900

PART NAME: DUAL BANANA PLUG			
MATERIAL: AS NOTED			
FINISH: AS NOTED	DRN BY: NT	DATE: 3.11.09	
	APP'D: LN	SCALE: 1.5X	
TOLERANCES INCH [MM] DECIMAL ± .005 [± 0.13] ANGULAR ± 1° UNLESS OTHERWISE SPECIFIED	CODE: C	DWG NO.: 6088-6089	