THIS DOCUMENT IS THE PROPERTY OF KEYSTONE ELECTRONICS CORP. AND SHALL NOT BE REPRODUCED, DISTRIBUTED OR USED AS A BASIS FOR MANUFACTURE WITHOUT PRIOR WRITTEN PERMISSION FROM KEYSTONE ELECTRONICS CORP.

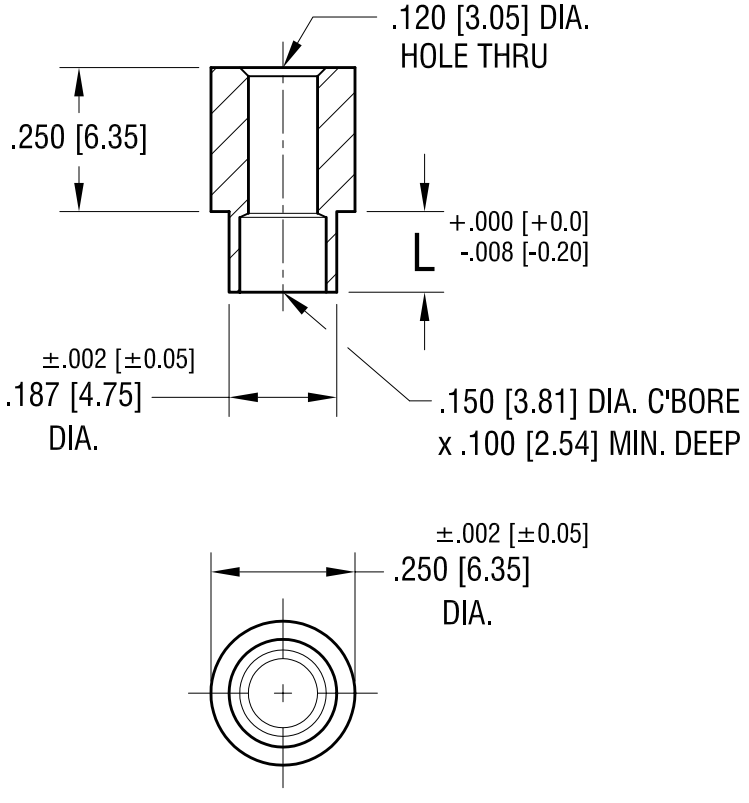

PART NO.	'L' DIM.
5060-2	.109 [2.77]
5060-3	.140 [3.56]

KEYSTONE ELECTRONICS CORP.
ASTORIA, N.Y. 11105-2017

PART NAME: ROUND SWAGE CLEAR SPACER

MATERIAL: BRASS

FINISH: DUCTILE NICKEL PLATE

DRN BY: BOONE | DATE: 5.10.02

APP'D: LN | SCALE: 3X

TOLERANCES INCH [MM]
DECIMAL ± .005 [± 0.15]
ANGULAR ± 1°
UNLESS OTHERWISE SPECIFIED

CODE: C/M

DWG NO. 5060-

DATE	DESCRIPTION	REV.