THIS DOCUMENT IS THE PROPERTY OF KEYSTONE ELECTRONICS CORP. AND SHALL NOT BE REPRODUCED, DISTRIBUTED OR USED AS A BASIS FOR MANUFACTURE WITHOUT PRIOR WRITTEN PERMISSION FROM KEYSTONE ELECTRONICS CORP.

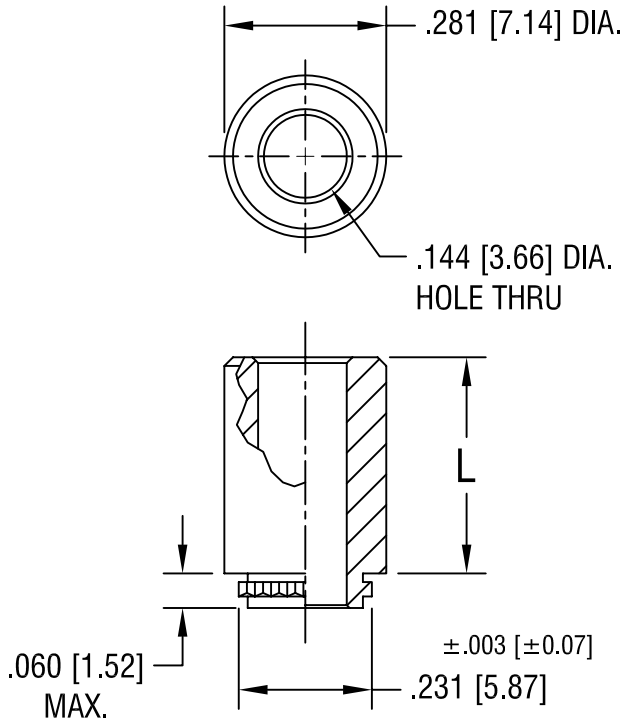

PART NO.	'L' DIM.
4855	.065 [1.65]
4856	.125 [3.18]
4857	.250 [6.35]
4858	.375 [9.53]
4859	.500 [12.70]

DATE	DESCRIPTION	REV.
12.19.05	CHANGE AS PER ECN 05–084	A

KEYSTONE ELECTRONICS CORP.
ASTORIA, N.Y. 11105-2017

PART NAME: FORCE-FIT STANDOFF, CLEAR HOLE

MATERIAL: STAINLESS STEEL

FINISH: -

DRN BY: BOONE | DATE: 4.22.96

APP'D: | SCALE: 3X

TOLERANCES INCH [MM]
DECIMAL ± .005 [± 0.15]
ANGULAR ± 1°
UNLESS OTHERWISE SPECIFIED

CODE: C/M

DWG NO.: 4855-4859