THIS DOCUMENT IS THE PROPERTY OF KEYSTONE ELECTRONICS CORP. AND SHALL NOT BE REPRODUCED, DISTRIBUTED OR USED AS A BASIS FOR MANUFACTURE WITHOUT PRIOR WRITTEN PERMISSION FROM KEYSTONE ELECTRONICS CORP.

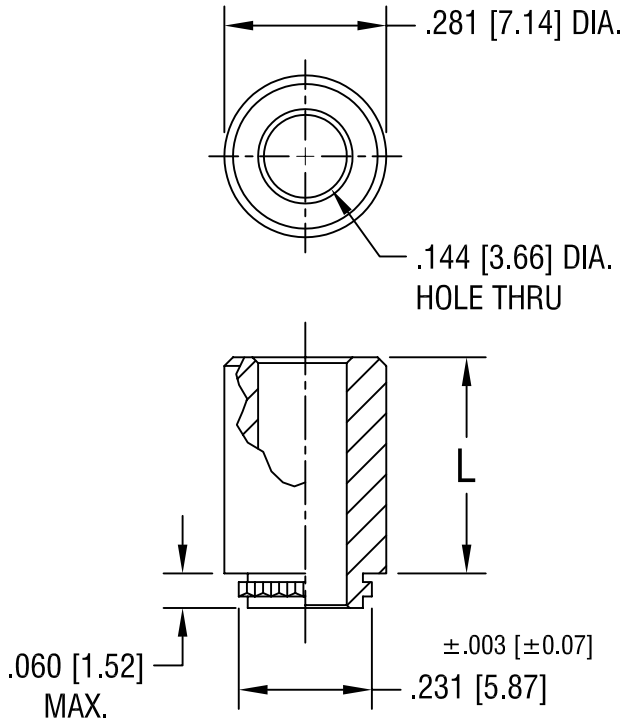


| PART NO. | 'L' DIM. |
|---|---|
| 4855 | .065 [1.65] |
| 4856 | .125 [3.18] |
| 4857 | .250 [6.35] |
| 4858 | .375 [9.53] |
| 4859 | .500 [12.70] |

| DATE | DESCRIPTION | REV. |
|---|---|---|
| 12.19.05 | CHANGE AS PER ECN 05–084 | A |

**KEYSTONE ELECTRONICS CORP.**
ASTORIA, N.Y. 11105-2017

PART NAME: FORCE-FIT STANDOFF, CLEAR HOLE

MATERIAL: STAINLESS STEEL

FINISH: -

DRN BY: BOONE | DATE: 4.22.96

APP'D: | SCALE: 3X

TOLERANCES INCH [MM]
DECIMAL ± .005 [± 0.15 ]
ANGULAR ± 1°
UNLESS OTHERWISE SPECIFIED

CODE: C/M

DWG NO.: 4855-4859