THIS DOCUMENT IS THE PROPERTY OF KEYSTONE ELECTRONICS CORP. AND SHALL NOT BE REPRODUCED, DISTRIBUTED OR USED AS A BASIS FOR MANUFACTURE WITHOUT PRIOR WRITTEN PERMISSION FROM KEYSTONE ELECTRONICS CORP.

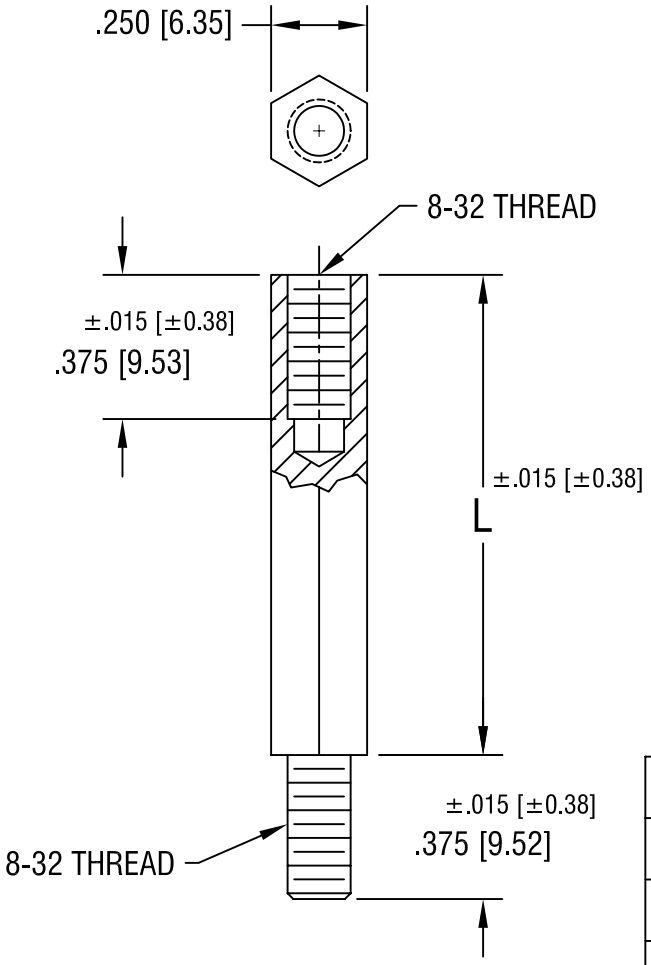

PART NO.	'L' DIM.
4836	1.250 [31.75]
4837	1.375 [34.93]
4838	1.500 [38.10]
4839	1.625 [41.28]
4840	1.750 [44.45]
4841	2.000 [50.80]

KEYSTONE ELECTRONICS CORP.
ASTORIA, N.Y. 11105-2017

PART NAME: NYLON M/F HEX STANDOFF

MATERIAL: NYLON 6/6

FINISH: -

DRN BY: BOONE | DATE: 4.10.96

APP'D: LN | SCALE: 2X

TOLERANCES INCH [MM]
DECIMAL ± .005 [± 0.15]
ANGULAR ± 1°
UNLESS OTHERWISE SPECIFIED

CODE: C/M

DWG NO.: 4836-4841

DATE	DESCRIPTION	REV.