THIS DOCUMENT IS THE PROPERTY OF KEYSTONE ELECTRONICS CORP. AND SHALL NOT BE REPRODUCED, DISTRIBUTED OR USED AS A BASIS FOR MANUFACTURE WITHOUT PRIOR WRITTEN PERMISSION FROM KEYSTONE ELECTRONICS CORP.

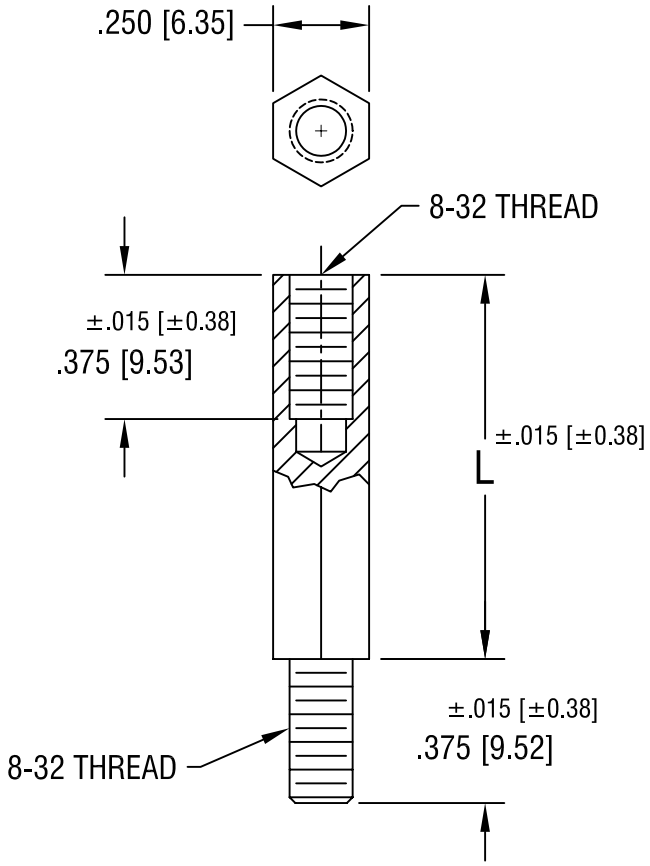

PART NO.	'L' DIM.
4830	.500 [12.70]
4831	.625 [15.87]
4832	.750 [19.05]
4833	.875 [22.22]
4834	1.000 [25.4]
4835	1.125 [28.57]

DATE	DESCRIPTION	REV.

KEYSTONE ELECTRONICS CORP.
ASTORIA, N.Y. 11105-2017

PART NAME: NYLON M/F HEX STANDOFF

MATERIAL: NYLON 6/6

FINISH: -

DRN BY: BOONE | DATE: 5.3.02

APP'D: | SCALE: 2X

TOLERANCES INCH [MM]
DECIMAL ± .005 [± 0.15]
ANGULAR ± 1°
UNLESS OTHERWISE SPECIFIED

CODE: C/M

DWG NO. 4830-4835