THIS DOCUMENT IS THE PROPERTY OF KEYSTONE ELECTRONICS CORP. AND SHALL NOT BE REPRODUCED, DISTRIBUTED OR USED AS A BASIS FOR MANUFACTURE WITHOUT PRIOR WRITTEN PERMISSION FROM KEYSTONE ELECTRONICS CORP.

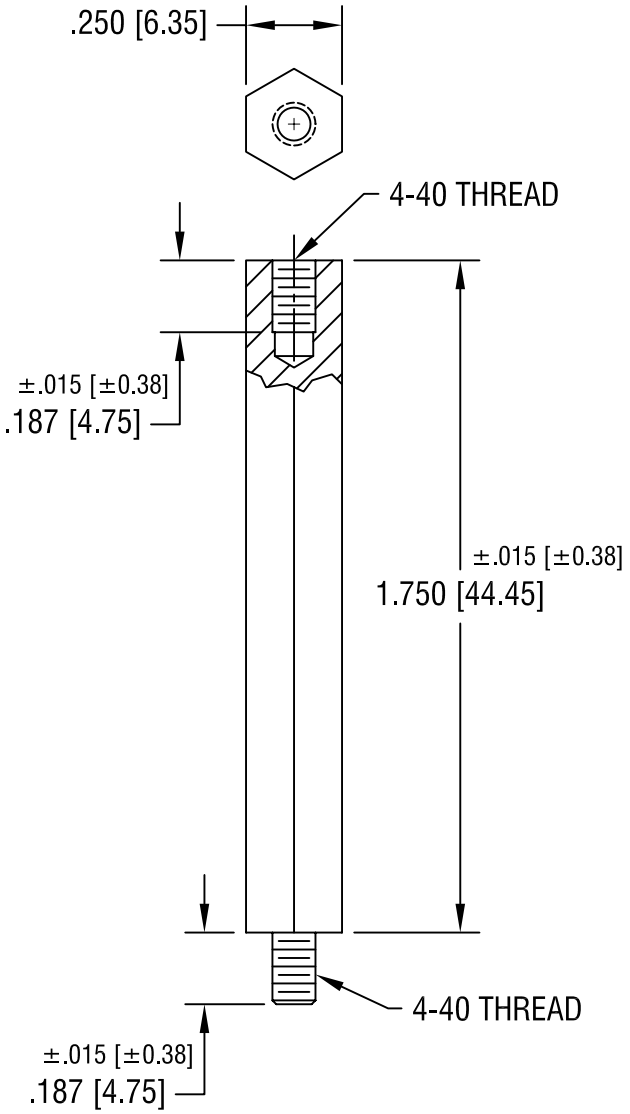

KEYSTONE ELECTRONICS CORP. ASTORIA, N.Y. 11105-2017		
PART NAME: NYLON M/F HEX STANDOFF		
MATERIAL: NYLON 6/6		
FINISH: -	DRN BY: BOONE	DATE: 10.4.94
	APP'D:	SCALE: 2X
TOLERANCES INCH [MM] DECIMAL ± .005 [± 0.15] ANGULAR ± 1° UNLESS OTHERWISE SPECIFIED	CODE: C/M	DWG NO.: 4812

DATE	DESCRIPTION	REV.