THIS DOCUMENT IS THE PROPERTY OF KEYSTONE ELECTRONICS CORP. AND SHALL NOT BE REPRODUCED, DISTRIBUTED OR USED AS A BASIS FOR MANUFACTURE WITHOUT PRIOR WRITTEN PERMISSION FROM KEYSTONE ELECTRONICS CORP.

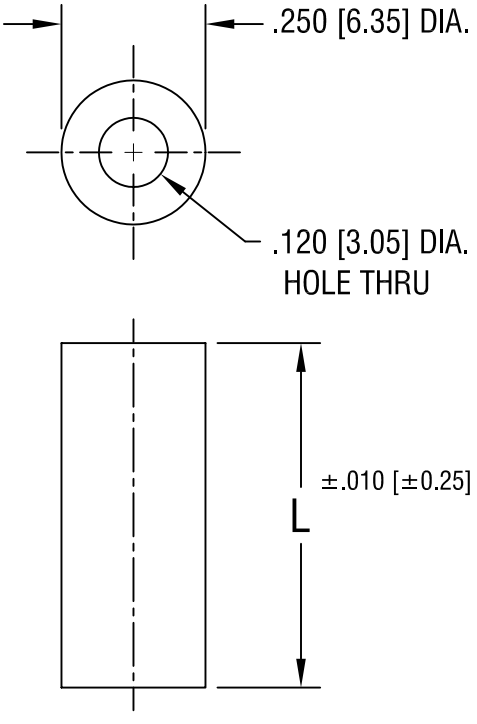

PART NO.	'L' DIM.
360	.250 [6.35]
361	.375 [9.52]
362	.500 [12.70]
363	.750 [19.05]
364	1.000 [25.4]
365	1.500 [30.48]
366	2.000 [50.80]

DATE	DESCRIPTION	REV.

KEYSTONE ELECTRONICS CORP.
ASTORIA, N.Y. 11105-2017

PART NAME: CLEAR THRU-HOLE SPACER

MATERIAL: PHENOLIC

FINISH: -

DRN BY: BOONE | DATE: 12.4.97

APP'D: | SCALE: 3X

TOLERANCES INCH [MM]
DECIMAL ± .005 [± 0.15]
ANGULAR ± 1°
UNLESS OTHERWISE SPECIFIED

CODE: C/M

DWG NO.: 360-366