THIS DOCUMENT IS THE PROPERTY OF KEYSTONE ELECTRONICS CORP. AND SHALL NOT BE REPRODUCED, DISTRIBUTED OR USED AS A BASIS FOR MANUFACTURE WITHOUT PRIOR WRITTEN PERMISSION FROM KEYSTONE ELECTRONICS CORP.

TOP TOOL

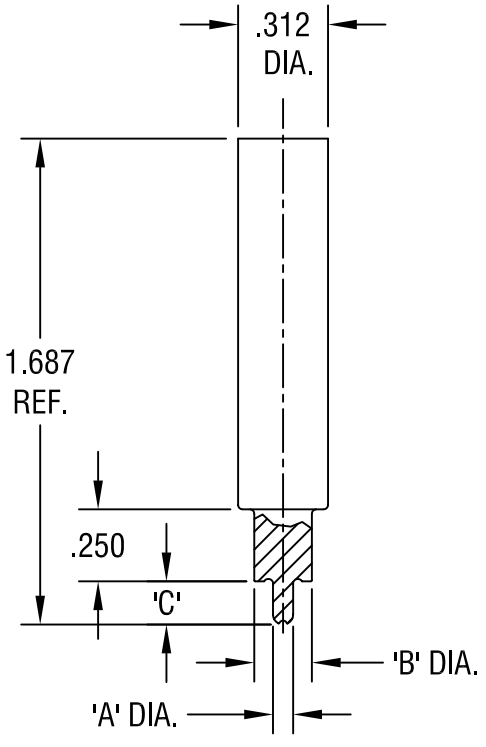

BOTTOM TOOL

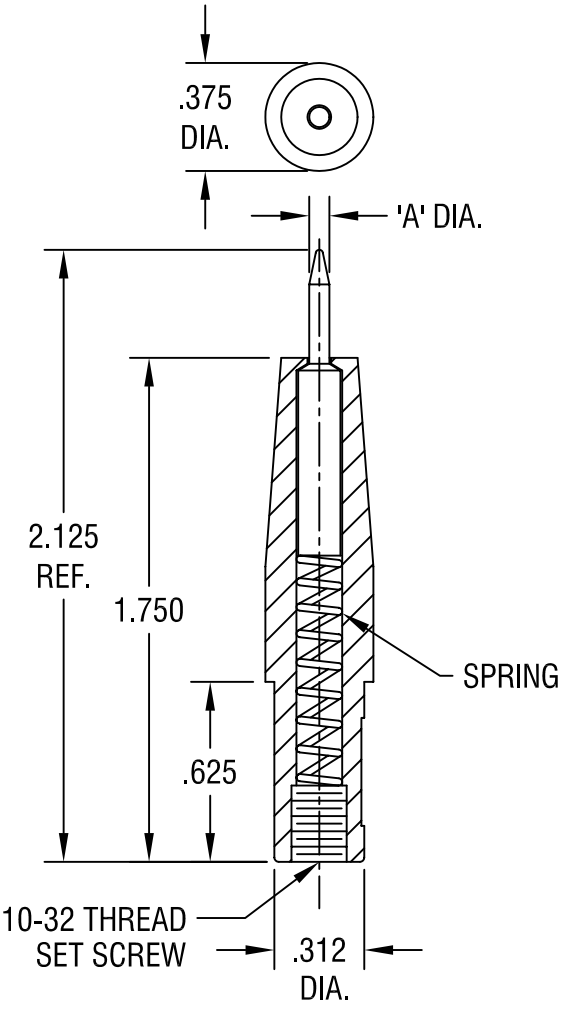

PART NO.	'A' DIA.	'B' DIA.	'C' DIM.	FOR EYELET
3075	.043 [1.09]	.150 [3.18]	.125 [3.18]	.062 [1.57]
3076	.070 [1.78]	.150 [3.18]	.150 [3.18]	.093 [2.36]
3077	.098 [2.49]	.200 [5.08]	.187 [4.75]	.125 [3.18]

KEYSTONE ELECTRONICS CORP.
ASTORIA, N.Y. 11105-2017

PART NAME: TOP & BOTTOM EYELET STAKING TOOL

MATERIAL: DRILL ROD

FINISH: -

DRN BY: BOONE | DATE: 5.26.04

APP'D: LN | SCALE: 1.5X

TOLERANCES INCH [MM]
DECIMAL ± .010 [±]
ANGULAR ± 1°
UNLESS OTHERWISE SPECIFIED

CODE: C

DWG NO.: 3075-3077

DATE	DESCRIPTION	REV.