THIS DOCUMENT IS THE PROPERTY OF KEYSTONE ELECTRONICS CORP. AND SHALL NOT BE REPRODUCED, DISTRIBUTED OR USED AS A BASIS FOR MANUFACTURE WITHOUT PRIOR WRITTEN PERMISSION FROM KEYSTONE ELECTRONICS CORP.

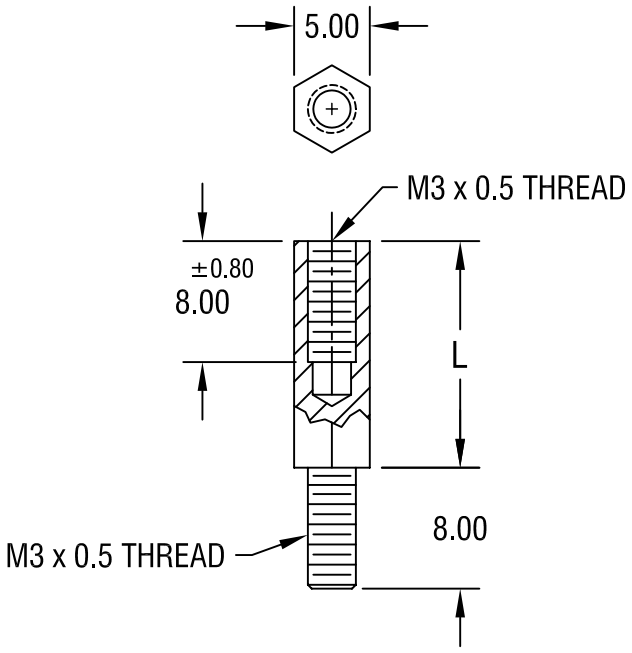

PART NO.	'L' DIM.
25501	10.00
25502	12.00
25503	15.00
25504	18.00
25505	20.00
25506	25.00

NOTE:

1. ALL DIMENSIONS ARE IN MILLIMETERS

DATE	DESCRIPTION	REV.

KEYSTONE ELECTRONICS CORP.
ASTORIA, N.Y. 11105-2017

PART NAME: 5mm M/F HEX STANDOFF			
MATERIAL: NYLON 6/6			
FINISH: -	DRN BY: BOONE	DATE: 7.18.06	
	APP'D: LN	SCALE: 2X	
TOLERANCES INCH [MM] DECIMAL ± [± 0.40] ANGULAR ± 1° UNLESS OTHERWISE SPECIFIED	CODE: C/M	DWG NO.: 25501-25506	