THIS DOCUMENT IS THE PROPERTY OF KEYSTONE ELECTRONICS CORP. AND SHALL NOT BE REPRODUCED, DISTRIBUTED OR USED AS A BASIS FOR MANUFACTURE WITHOUT PRIOR WRITTEN PERMISSION FROM KEYSTONE ELECTRONICS CORP.

ACTUAL SIZE



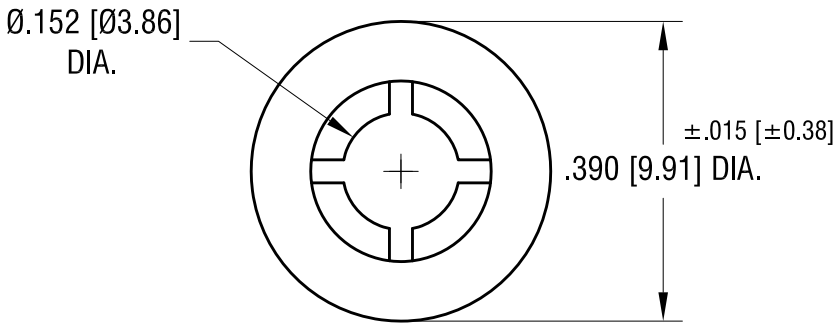

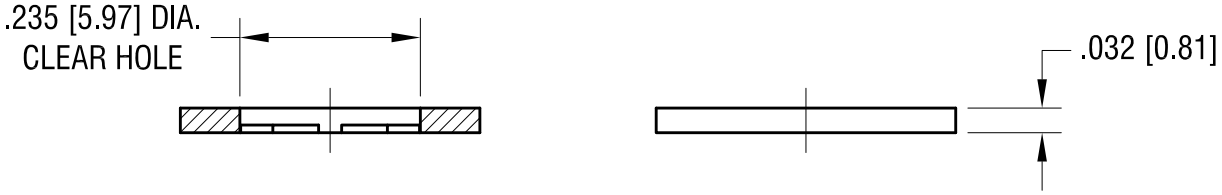

DATE	DESCRIPTION	REV.

KEYSTONE ELECTRONICS CORP.

www.keyelco.com ● ASTORIA, N.Y. 11105-2017 ● Tel (718) 956-8900

PART NAME: #8 RETAINING WASHER			
MATERIAL: NYLON 6/6			
FINISH: -	DRN BY: NT	DATE: 7.08.14	
	APP'D: LN	SCALE: 4X	
TOLERANCES INCH [MM] DECIMAL ± .005 [± 0.13] ANGULAR ± 1° UNLESS OTHERWISE SPECIFIED	CODE: C	DWG NO.: 2247	