THIS DOCUMENT IS THE PROPERTY OF KEYSTONE ELECTRONICS CORP. AND SHALL NOT BE REPRODUCED, DISTRIBUTED OR USED AS A BASIS FOR MANUFACTURE WITHOUT PRIOR WRITTEN PERMISSION FROM KEYSTONE ELECTRONICS CORP.

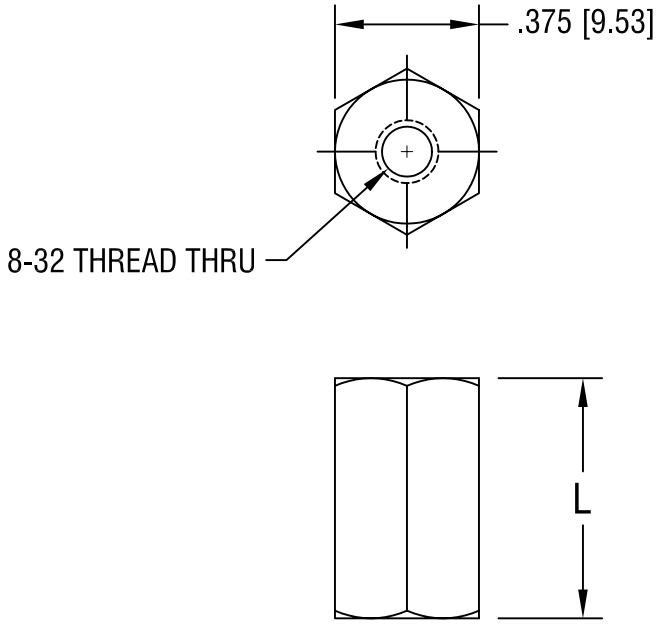

PART NO.	'L' DIM.
1926A	.375 [9.53]
1926B	.500 [12.70]
1626C	.625 [15.88]
1926D	.750 [19.05]
1926E	1.000 [25.4]

DATE	DESCRIPTION	REV.

KEYSTONE ELECTRONICS CORP.
ASTORIA, N.Y. 11105-2017

PART NAME: THREADED HEX STANDOFF

MATERIAL: ALUMINUM

FINISH: CLEAR IRIDITE

DRN BY: BOONE | DATE: 3.24.98

APP'D: LN | SCALE: 2X

TOLERANCES INCH [MM]
DECIMAL ± .005 [± 0.15]
ANGULAR ± 1°
UNLESS OTHERWISE SPECIFIED

CODE: C/M

DWG NO.: 1926A-E