THIS DOCUMENT IS THE PROPERTY OF KEYSTONE ELECTRONICS CORP. AND SHALL NOT BE REPRODUCED, DISTRIBUTED OR USED AS A BASIS FOR MANUFACTURE WITHOUT PRIOR WRITTEN PERMISSION FROM KEYSTONE ELECTRONICS CORP.

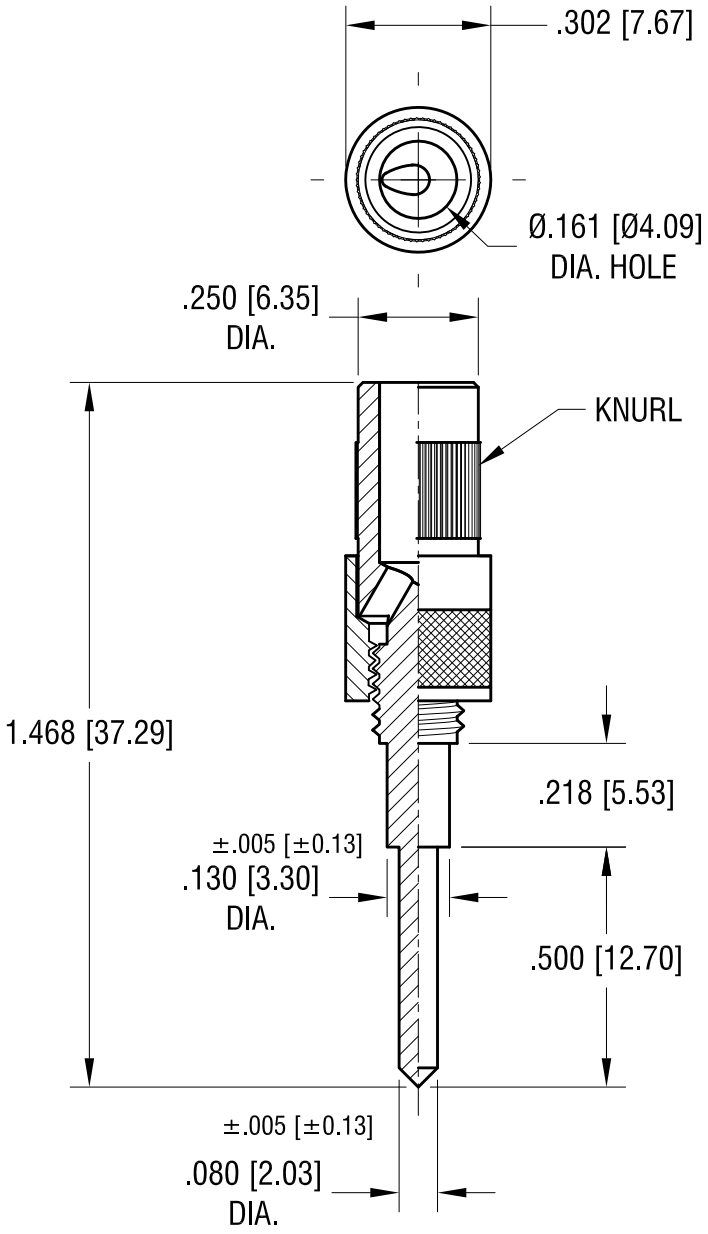



KEYSTONE ELECTRONICS CORP.

www.keyelco.com ● ASTORIA, N.Y. 11105-2017 ● Tel (718) 956-8900

PART NAME	FORCE FIT SOLDERLESS TIP		
MATERIAL	BRASS		
FINISH	NICKEL PLATE	DRN BY: NT	DATE: 3.29.11
		APP'D: LN	SCALE: 2.5X
TOLERANCES: DECIMAL ± .015 [± 0.38] ANGULAR ± 1° UNLESS OTHERWISE SPECIFIED	CODE: C/M	DWG NO.	1690

DATE	DESCRIPTION	REV.