H distributor - QPD H 3PE2,5 6-10 BK - 1582145

Please be informed that the data shown in this PDF Document is generated from our Online Catalog. Please find the complete data in the user's documentation. Our General Terms of Use for Downloads are valid (http://download.phoenixcontact.com)



QUICKON H-distributor, black, 3 pos. +PE, 1.0 mm² ... 2.5 mm² / 630 V / 20 A, for cable diameters of 6 mm ... 10 mm, with a sealing bolt.

Key commercial data

Packing unit	0
Minimum order quantity	1
Catalog page	Page 94 (PC-2011)
GTIN	4 046356 316804
Custom tariff number	85366990
Country of origin	GERMANY

Technical data

General characteristics

Design	H-distributor
Color	black
Locking type	Screw locking
Connection method	QUICKON connection
Connection method	IDC connection
Number of positions	4
Note number of positions	3+PE
Wrench size, union nut	22 mm
Tightening torque, union nut	5 Nm
Number of connections	4
Conductor cross section stranded min.	1.5 mm²
Conductor cross section stranded max.	2.5 mm²
Conductor cross section solid min.	1 mm²
Conductor cross section solid max.	2.5 mm²
Conductor cross section AWG/kcmil min.	16
Conductor cross section AWG/kcmil max	14

Conductor data

H distributor - QPD H 3PE2,5 6-10 BK - 1582145

Technical data

Conductor data

Structure of individual litz in acc. with VDE 0295 / smallest wire diameter	VDE 0295 class 1 to 6 / min. 0.15 mm
Wire insulation material	PVC / PE
Wire diameter including insulation	2.5 mm ... 3.8 mm
External cable diameter	6 mm ... 10 mm

Environmental conditions

Degree of protection	IP68, 24 h / 2 m
Ambient temperature (operation)	-40 °C ... 80 °C (See also derating-diagram)
Ambient temperature (storage/transport)	-40 °C ... 80 °C
Temperature when conductor connected	-5 °C ... 50 °C

Electrical characteristics

Nominal current IN	20 A
Rated current	20 A (See also derating-diagram)
Rated voltage (III/3)	630 V
Rated voltage (III/2)	1000 V
Rated voltage (II/2)	1000 V
Rated surge voltage (III/3)	6 kV
Rated surge voltage (III/2)	8 kV
Rated surge voltage (II/2)	8 kV

Mechanical characteristics

QUICKON connectability	max. 10
Insertion/withdrawal cycles	50 (Quickon connections max. 10)

Material data

Contact material	CuZn
Contact surface material	Tin-plated
Contact carrier material	PA
Insulating material	PA
Inflammability class according to UL 94	V0
Surge voltage category	III
Pollution degree	3

Classifications

eclass

eCl@ss 4.0	272607xx
eCl@ss 4.1	27260701
eCl@ss 5.0	27143424
eCl@ss 5.1	27143424
eCl@ss 6.0	27143424
eCl@ss 7.0	27440209

H distributor - QPD H 3PE2,5 6-10 BK - 1582145

Classifications

etim

ETIM 3.0	EC001121
ETIM 4.0	EC002635

unspsc

UNSPSC 6.01	30211923
UNSPSC 7.0901	39121522
UNSPSC 11	39121522
UNSPSC 12.01	39121522
UNSPSC 13.2	39121522

Approvals

Approvals

Approvals

VDE approval of drawings / IECEE CB Scheme / UL Listed / cUL Listed / GOST / cUL Listed

Ex Approvals

Approvals submitted

Approval details

VDE approval of drawings

mm²/AWG/kcmil	1.5-2.5
Nominal current IN	20 A
Nominal voltage UN	690 V

IECEE CB Scheme

mm²/AWG/kcmil	1-2.5
Nominal current IN	20 A
Nominal voltage UN	690 V

H distributor - QPD H 3PE2,5 6-10 BK - 1582145

Approvals

UL Listed

mm²/AWG/kcmil	16
Nominal current IN	10 A
Nominal voltage UN	600 V

cUL Listed

mm²/AWG/kcmil	16
Nominal current IN	10 A
Nominal voltage UN	600 V

GOST

cUL Listed

Accessories

Accessories

Plug/Adapter

Coding profile - CP-QPD - 1582459



Keying profile red, for pushing into the QUICKON dome and connector, can be positioned in 90° steps.

Protection and sealing elements

Closing cap - SEALING PLUG 10X16 RD - 1400284



Closing cap, for closing unused bore holes in multiple seals and cable glands, diameter 10 mm

H distributor - QPD H 3PE2,5 6-10 BK - 1582145

Accessories

Tools

Socket wrench - QSS 22 - 1670206



Allen wrench, for loosening and fastening the QUICKON union nut, WAF 22 mm

---

Assembly clip - QPD CLIP 2,5 BK - 1582235



Holding clip for Quickon-H distributor, for snapping on and removal without tools.

Engraving material - GPE 13X 9 WH - 0806932



Engraving material, Sheet, white, Unlabeled, Can be labeled with: Gravur, Plotter, Mounting type: Adhesive, Lettering field: 13 x 9 mm

---

Protective cap - QPD QSK 2,5 FS - 1582488

Plastic protective cap, for QPD-QUICKON connectors, green, with holding band, IP68



Connectors - QPD P 3PE2,5 6-10 BK - 1582202



QUICKON-plug-in connector, black, 3+PE-pos., 1.0 mm² ... 2.5 mm²/630 V/20 A, with QUICKON nut, for cables with a diameter of 6 mm ... 10 mm.

H distributor - QPD H 3PE2,5 6-10 BK - 1582145

Accessories

Connectors - QPD P 3PE2,5 9-14 BK - 1582205



QUICKON plug-in connector, black, 3+PE-pos., 1.0 mm² ... 2.5 mm²/630 V/20 A, with QUICKON nut, for cables with a diameter of 9 mm ... 14 mm.

Drawings

Diagram

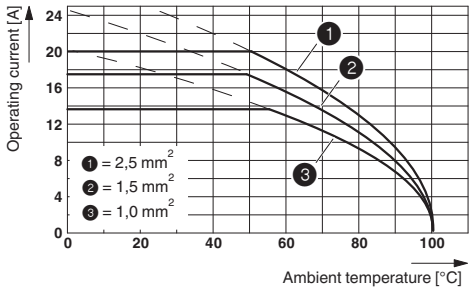

Dimensioned drawing

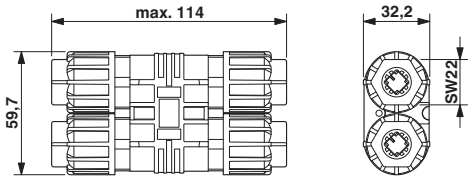

Dimensional drawing

Schematic diagram

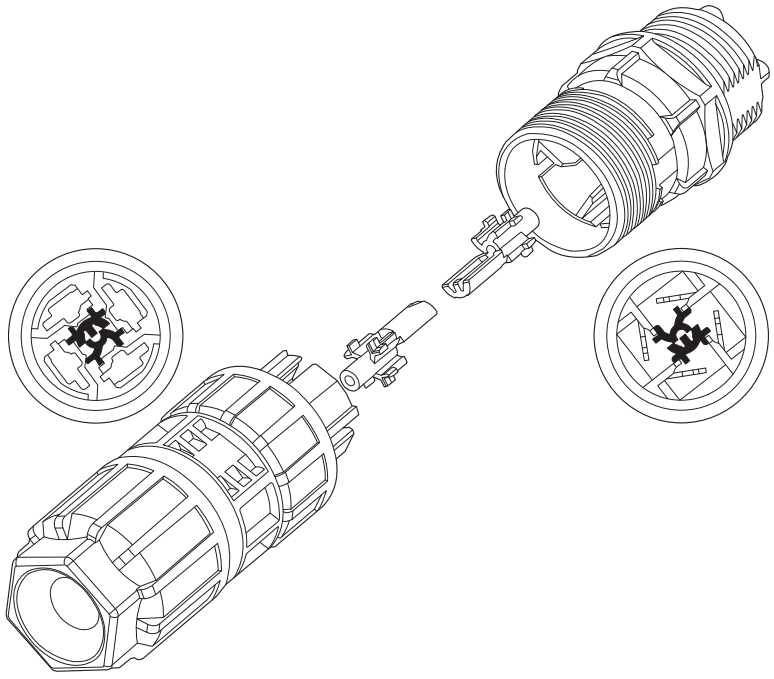

Keying of the QUICKON plug-in connection

© Phoenix Contact 2012 - all rights reserved
http://www.phoenixcontact.com