Display Elektronik GmbH

DATA SHEET

TFT- MODULE

DEM 480272D TTH-PW-N

4,3” TFT

(Low-Reflective)

11.05.2012

Revise Records

Rev.	Date	Contents	Written	Approved
0	11.05.2012	Preliminary Specification	AJ	MH

Special Notes

Note1.	

Contents

1 General Description and Features 4
1.1 Features 4
1.2 LCD Module 4
2 Mechanical Information 5
3 Electrical Specifications 5
3.1 Absolute Max. Ratings 5
3.2 Electrical Absolute Rating 5
4 Electrical Characteristics 6
4.1 TFT-LCD Module 6
4.2 Backlight Unit 6
5 Block Diagram 7
6 Input Terminal Pin Assignment 8
6.1 CN1 Pin Assignment 8
7 Optical Characteristics 9
8 Basic Display Color and Gray Scale 11
9 AC Timing 12
9.1 AC Characteristics 12
9.2 Parallel RGB Input Timing Table (SYNC MODE) 13
9.3 POWER ON/OFF SEQUENCE 14
10 Test 15
11 Dimensional outlines 16
12 Incoming Inspection Standards 17

1 General Description and Features

DEM 480272D TTH-PW-N is a TM (Transmissive) type color active matrix TFT (Thin Film Transistor) liquid crystal display (LCD) that uses amorphous silicon TFT as a switching device. This model is composed of a TFT-LCD module, a driver circuit and a back-light unit. The resolution of a 4.3" contains 480(RGB)x272 dots and can display up to 16.7M colors. The following table described the features of DEM 480272D TTH-PW-N.

1.1 Features

- Transmissive and Backlight with 12 LEDs.
- TN (Twisted Nematic) mode.
- 24bit RGB Interface
- ROHS Compliance
- Low-Reflective Polarizer

1.2 LCD Module

Item	Specification	Unit
Screen Size	4.3 inches	Diagonal
Display Resolution	480(H) x RGB x 272(V)	Dot
Pixlel size	0.198 (H) x 0.198 (V)	mm
Active Area	95.040 (H) x 53.856 (V)	mm
Outline Dimension	105.5 (W) x 67.2 (H) x 3.95 (D)	mm
Display Mode	Normally white/Transmissive	--
Pixel Arrangement	RGB Vertical-Stripe	--
Surface Treatment	Hard-Coating / LR Glare Type(3H)	--
Display Color	16.7M	--
Viewing Direction (Gray Inversion)	6 o'clock (Gray Inversion)	--
Input Interface	Digital 24-bits parallel RGB	--

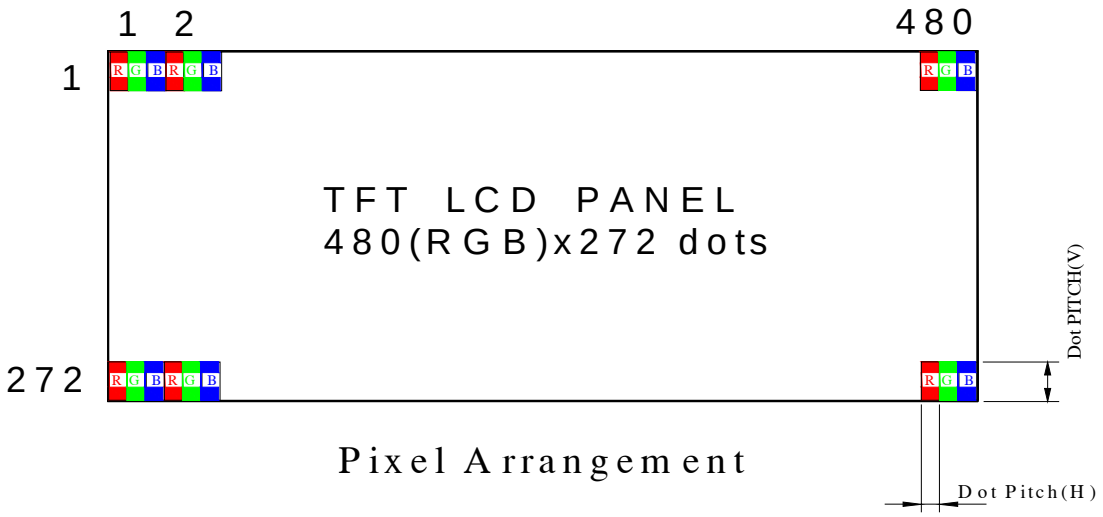

2 Mechanical Information

Item		Min.	Typ.	Max.	Unit	Note
Module Size	Horizontal (H)	--	105.5	--	mm	--
	Vertical (V)	--	67.20	--	mm	(1)
	Thickness (T)	--	3.95	--	mm	(1)
Weight		--	(60)	--	g	--

Note (1) Not include FPC.
Refer to the Dimensional Outlines for further information.

3 Electrical Specifications

3.1 Absolute Max. Ratings

3.1.1 Absolute Ratings of Environment

If the operating condition exceeds the following absolute maximum ratings, the TFT LCD module may be damaged permanently.

(Ta=25±2°C, V_{SS}=GND=0)

Item	Symbol	Min.	Max.	Unit	Note
Storage temperature	T_{STG}	-30	80	°C	(1)
Operating temperature	T_{OPR}	-20	70	°C	(1,2,3)

Note (1) 95 % RH Max. (40 °C ≥ Ta). Maximum wet-bulb temperature at 39 °C or less. (Ta > 40 °C) No condensation.

Note (2) In case of below 0°, the response time of liquid crystal (LC) becomes slower and the color of panel becomes darker than normal one. Level of retardation depends on temperature, because of LC's character

Note (3) Only operation is guarantied at operating temperature. Contrast, response time, another display quality are evaluated at +25°C.

3.2 Electrical Absolute Rating

3.2.1 TFT-LCD Module

(Ta=25±2°C, V_{SS}=GND=0)

Item	Symbol	Value		Unit	Condition
		Min.	Max.		
Power supply voltage	V_{DD}	-0.3	4.5	V	

3.2.2 Backlight Unit

(Ta=25±2°C)

Item	Symbol	Min.	Max.	Unit	Note
Current of One LED	I_{LED}	--	(25)	mA	(1)

Note (1) Permanent damage to the device may occur if maximum values are exceeded or reverse voltage is loaded. Functional operation should be restricted to the conditions described under normal operating conditions.

4 Electrical Characteristics

4.1 TFT-LCD Module

(Ta=25±2°C, V_{DD} =3.3V)

Item		Symbol	Value			Unit	Condition
			Min.	Typ.	Max.		
Power supply voltage		V_{DD}	3.0	3.3	3.6	V	
Input Voltage for logic	H Level	VIH	0.7xV_{DD}	-	V_{DD}	V	
	L Level	VIL	0	-	0.3xV_{DD}	V	
Digital Current		I_{DD}	-	(13)	(15)	mA	

Note (1) The specified power consumption is under the conditions at V_{CC}=3.3V , F_V=60Hz, whereas a Power dissipation check pattern below is displayed.

Black Pattern / 0 Gray



Active Area

4.2 Backlight Unit

The back-light system is an edge-lighting type with white LED (Light Emitting Diode)s.

(Ta=25±2°C)

Item	Symbol	Value			Unit	Condition
		Min.	Typ.	Max.		
LED Voltage	V_L	-	(19.8)	(21)	V	
LED Current	I_f	-	(40)	(50)	mA	
Power Consumption	P_{BL}	-	(792)	(1050)	mW	(2)
LED Life Time (25°C)	-	(20000)	-	-	hr	(3)

Note :(1) 6 LEDs serial 2 parallel type.

(2) Where I_f = 40mA, V_L = 19.8V, P_{BL} = V_L × I_f

(3)The environmental conducted under ambient air flow ,at Ta=25±2°C,60%RH±5%

5 Block Diagram

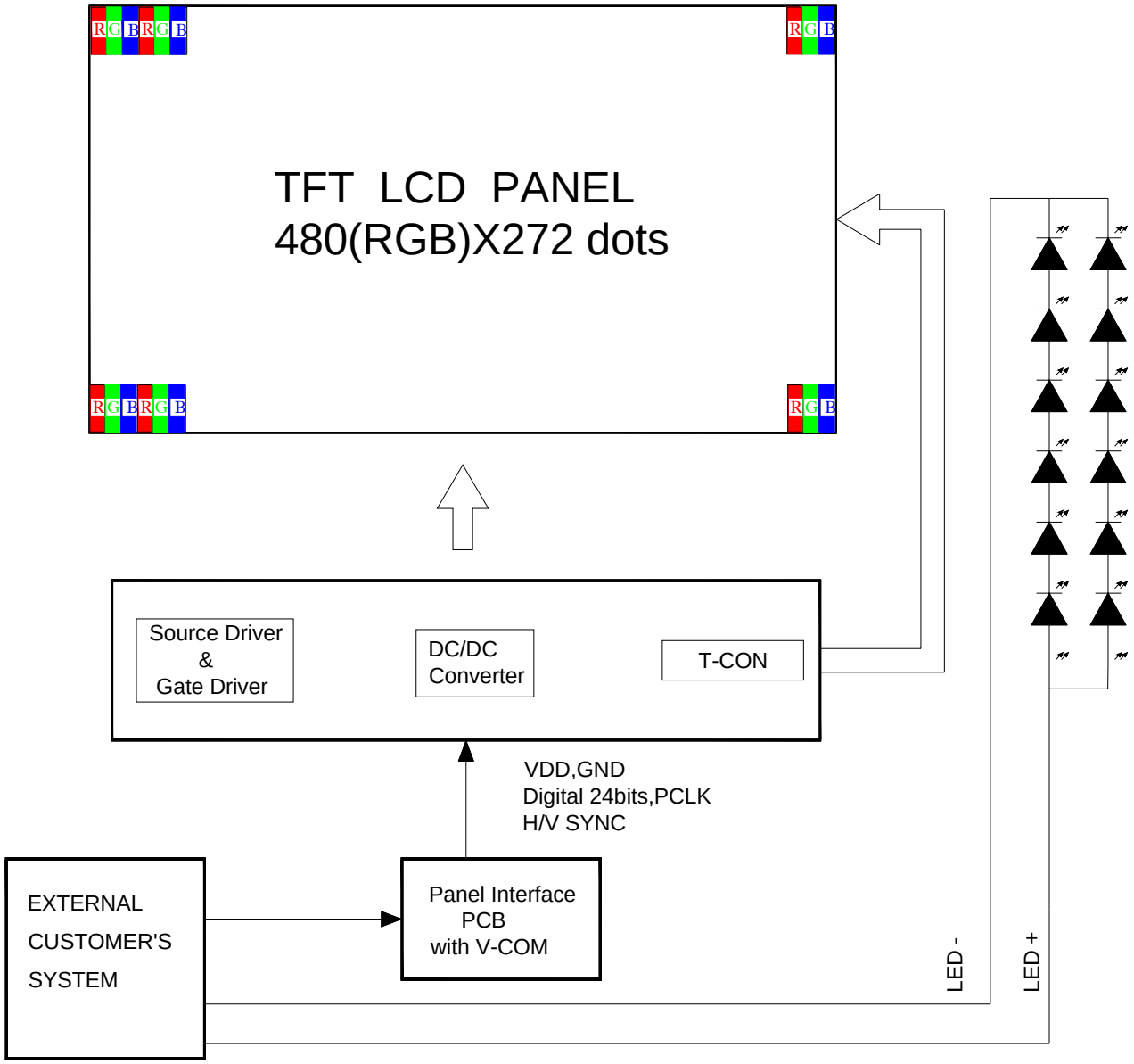

6 Input Terminal Pin Assignment

6.1 **CN1 Pin Assignment** (Ref. Connector: Hirose Electric Co., LTD. Product No. FH12A-40S-0.5SH(55) Top contact type)

Pin No.	Symbol	I/O	Function	Remark
1	VSS	P	Ground	
2	VSS	P	Ground	
3	V_{DD}	P	Logic power supply(+3.0~3.6V)	
4	V_{DD}	P	Logic power supply(+3.0~3.6V)	
5	R0	I	Red Data Bit 0(LSB)	
6	R1	I	Red Data Bit 1	
7	R2	I	Red Data Bit 2	
8	R3	I	Red Data Bit 3	
9	R4	I	Red Data Bit 4	
10	R5	I	Red Data Bit 5	
11	R6	I	Red Data Bit 6	
12	R7	I	Red Data Bit 7(MSB)	
13	G0	I	Green Data Bit 0(LSB)	
14	G1	I	Green Data Bit 1	
15	G2	I	Green Data Bit 2	
16	G3	I	Green Data Bit 3	
17	G4	I	Green Data Bit 4	
18	G5	I	Green Data Bit 5	
19	G6	I	Green Data Bit 6	
20	G7	I	Green Data Bit 7(MSB)	
21	B0	I	Blue Data Bit 0 (LSB)	
22	B1	I	Blue Data Bit 1	
23	B2	I	Blue Data Bit 2	
24	B3	I	Blue Data Bit 3	
25	B4	I	Blue Data Bit 4	
26	B5	I	Blue Data Bit 5	
27	B6	I	Blue Data Bit 6	
28	B7	I	Blue Data Bit 7(MSB)	
29	VSS	P	Ground	
30	P_{CLK}	I	Dot Data Clock	
31	DISP	I	Display on/off	
32	H_{SYNC}	I	Horizontal Sync Input	(1)
33	V_{SYNC}	I	Vertical Sync Input	(1)
34	NC	-	No Connect	
35	NC	-	No Connect	
36	NC	-	No Connect	
37	NC	-	No Connect	
38	NC	-	No Connect	
39	LEDK	P	Backlight Cathode	
40	LEDA	P	Backlight Anode	

Note: (1). Default Use SYNC MODE.

7 Optical Characteristics

The following items are measured under stable conditions. The optical characteristics should be measured in a dark room
Measuring equipment: BM-7A

(Ta=25±2°C , VDD =3.3V, $I_{f=}$40mA)

Item		Symbol	Condition	Min	Type	Max	Unit	Note
Brightness		--	--	(800)	(1000)	--	cd/m^2	--
Response time		T_R	θ=0°	--	10	15	ms	--
		T_F		--	20	30	ms	
Contrast ratio		CR	At optimized viewing angle	(250)	(350)	--	--	--
Color Chromaticity	Red	R_X	θ=0° Normal Viewing Angle	(0.57)	(0.62)	(0.67)	--	--
		R_Y		(0.29)	(0.34)	(0.39)		
	Green	G_X		(0.29)	(0.34)	(0.39)	--	
		G_Y		(0.52)	(0.57)	(0.62)		
	Blue	B_X		(0.09)	(0.14)	(0.19)	--	
		B_Y		(0.05)	(0.10)	(0.15)		
	White	Wx		(0.27)	(0.32)	(0.37)	--	
		Wy		(0.29)	(0.34)	(0.39)		
Viewing Angle (6H)	Hor.	θ_R	CR≥10	50	(65)		Degree	--
		θ_L		50	(65)			
	Ver.	θ_U		40	(50)			
		θ_D		50	(60)			

a. Test equipment setup

After stabilizing and leaving the panel alone shall be warmed up for the stable operation of LCM, the measurement should be executed. Measurement should be executed in a stable, windless, and dark room. Optical specifications are measured by Topcon BM-5A/BM-7(fast) with a viewing angle of 2° at a distance of 50cm and normal direction.

b. Definition of response time: Tr and Tf

The response time is defined as the following figure and shall be measured by switching the input signal for "black" and "white".

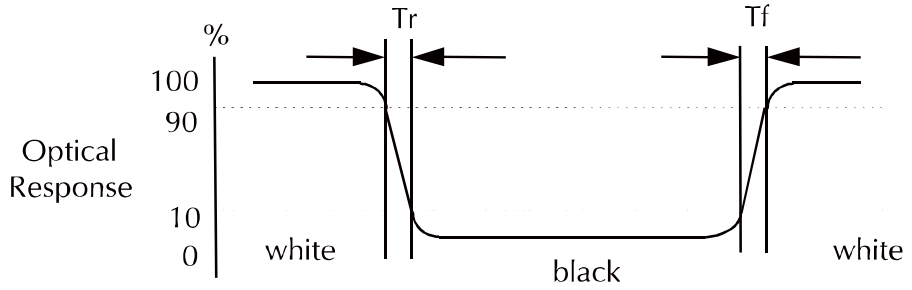

c. Definition of contrast ratio:

$$\text{Contrast Ratio (CR)} = \frac{\text{Brightness measured when LCD is at "white state"}}{\text{Brightness measured when LCD is at "black state"}}$$

d. Measured at the center area of the panel when all the input terminals of LCD panel are electrically opened.

e. View Angle

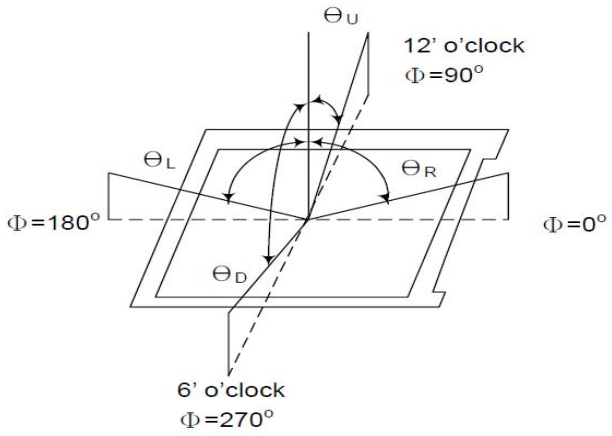

f. Definition of Luminance of White: Luminance of white at the center points

Light Source of Back-Light Unit	LED Type

g. Definition of White Uniformity

$$\text{White Uniformity} = \frac{\text{Min. luminance of white among 9-points}}{\text{Max. luminance of white among 9-points}} \quad X \quad 100\%$$

h. The definition of Color Gamut -Color Chromaticity CIE 1931
Color coordinate of white & red, green, blue at center point.
Color Gamut : NTSC(%) = (RGB Triangle Area / NTSC Triangle Area) x 100

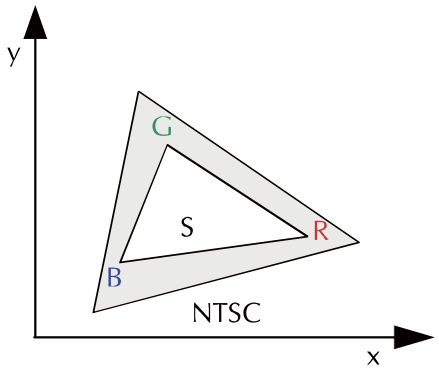

8 Basic Display Color and Gray Scale

	Color & Gray Scale	Data Signal																							
		R7	R6	R5	R4	R3	R2	R1	R0	G7	G6	G5	G4	G3	G2	G1	G0	B7	B6	B5	B4	B3	B2	B1	B0
Basic Color	Black	0	0	0	0	0	0	0	0	0	0	0	0	0	0	0	0	0	0	0	0	0	0	0	0
	Red(0)	1	1	1	1	1	1	1	1	0	0	0	0	0	0	0	0	0	0	0	0	0	0	0	0
	Green(0)	0	0	0	0	0	0	0	0	1	1	1	1	1	1	1	1	0	0	0	0	0	0	0	0
	Blue(0)	0	0	0	0	0	0	0	0	0	0	0	0	0	0	0	0	1	1	1	1	1	1	1	1
	Cyan	0	0	0	0	0	0	0	0	1	1	1	1	1	1	1	1	1	1	1	1	1	1	1	1
	Magenta	1	1	1	1	1	1	1	1	0	0	0	0	0	0	0	0	1	1	1	1	1	1	1	1
	Yellow	1	1	1	1	1	1	1	1	1	1	1	1	1	1	1	1	0	0	0	0	0	0	0	0
	White	1	1	1	1	1	1	1	1	1	1	1	1	1	1	1	1	1	1	1	1	1	1	1	1
Red	Black	0	0	0	0	0	0	0	0	0	0	0	0	0	0	0	0	0	0	0	0	0	0	0	0
	Red(1)	0	0	0	0	0	0	0	1	0	0	0	0	0	0	0	0	0	0	0	0	0	0	0	0
	Red(2)	0	0	0	0	0	0	1	0	0	0	0	0	0	0	0	0	0	0	0	0	0	0	0	0
	:	:	:	:	:	:	:	:	:	:	:	:	:	:	:	:	:	:	:	:	:	:	:	:	:
	Red(127)	0	1	1	1	1	1	1	1	0	0	0	0	0	0	0	0	0	0	0	0	0	0	0	0
	:	:	:	:	:	:	:	:	:	:	:	:	:	:	:	:	:	:	:	:	:	:	:	:	:
	Red(254)	1	1	1	1	1	1	1	0	0	0	0	0	0	0	0	0	0	0	0	0	0	0	0	0
	Red(255)	1	1	1	1	1	1	1	1	0	0	0	0	0	0	0	0	0	0	0	0	0	0	0	0
Green	Black	0	0	0	0	0	0	0	0	0	0	0	0	0	0	0	0	0	0	0	0	0	0	0	0
	Green(1)	0	0	0	0	0	0	0	0	0	0	0	0	0	0	0	1	0	0	0	0	0	0	0	0
	Green(2)	0	0	0	0	0	0	0	0	0	0	0	0	0	0	1	0	0	0	0	0	0	0	0	0
	:	:	:	:	:	:	:	:	:	:	:	:	:	:	:	:	:	:	:	:	:	:	:	:	:
	Green(127)	0	0	0	0	0	0	0	0	0	1	1	1	1	1	1	1	0	0	0	0	0	0	0	0
	:	:	:	:	:	:	:	:	:	:	:	:	:	:	:	:	:	:	:	:	:	:	:	:	:
	Green(254)	0	0	0	0	0	0	0	0	1	1	1	1	1	1	1	0	0	0	0	0	0	0	0	0
	Green(255)	0	0	0	0	0	0	0	0	1	1	1	1	1	1	1	1	0	0	0	0	0	0	0	0
Blue	Black	0	0	0	0	0	0	0	0	0	0	0	0	0	0	0	0	0	0	0	0	0	0	0	0
	Blue(1)	0	0	0	0	0	0	0	0	0	0	0	0	0	0	0	0	0	0	0	0	0	0	0	1
	Blue(2)	0	0	0	0	0	0	0	0	0	0	0	0	0	0	0	0	0	0	0	0	0	0	1	0
	:	:	:	:	:	:	:	:	:	:	:	:	:	:	:	:	:	:	:	:	:	:	:	:	:
	Blue(127)	0	0	0	0	0	0	0	0	0	0	0	0	0	0	0	0	0	1	1	1	1	1	1	1
	:	:	:	:	:	:	:	:	:	:	:	:	:	:	:	:	:	:	:	:	:	:	:	:	:
	Blue(254)	0	0	0	0	0	0	0	0	0	0	0	0	0	0	0	0	1	1	1	1	1	1	1	0
	Blue(255)	0	0	0	0	0	0	0	0	0	0	0	0	0	0	0	0	1	1	1	1	1	1	1	1

0 : Low level voltage, 1 :High level voltage

Each basic color can be displayed in 256 gray scales from 8 bit data signals. With the combination of total 24 bit data signals, the 16,777,216-color display can be achieved on the screen.

9 AC Timing

9.1 AC Characteristics

Parameter	Symbol	Min	Typ	Max	Unit
CLK pulse duty	Tcw	40	50	60	%
Hsync width	Thw	1.0	-	-	DCLK
Hsync period	Th	55	60	65	us
Vsync setup time	Tvst	12	-	-	ns
Vsync hold time	Tvhd	12	-	-	ns
Hsync setup time	Thst	12	-	-	ns
Hsync hold time	Thhd	12	-	-	ns
Data set-up time	Tdsu	12	-	-	ns
Data hold time	Tdhd	12	-	-	ns

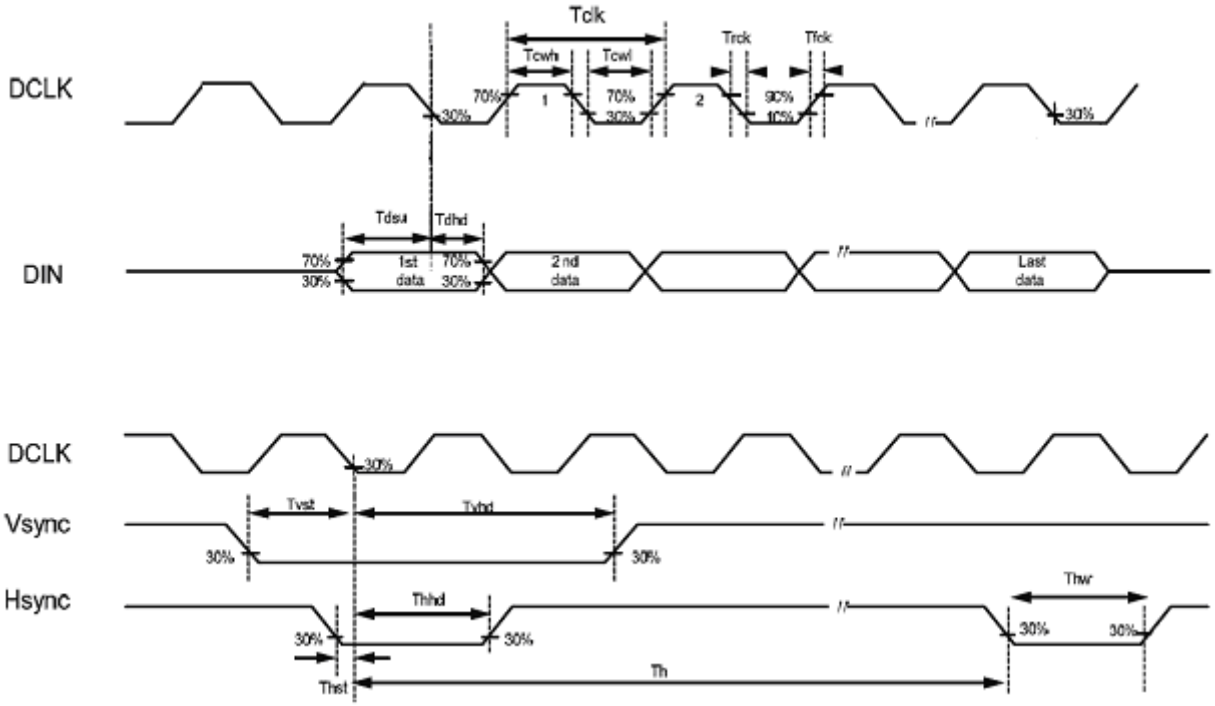

9.2 Parallel RGB Input Timing Table (SYNC MODE)

Signal	Parameter	Symbol	Min.	Typ.	Max.	Unit.	Remark
DCLK	DCLK frequency	Fclk	5	9	12	MHz	
	DCLK period	Tclk	83	110	200	ns	
Hsync	Period Time	Th	490	531	605	DCLK	
	Display Period	Thdisp	-	480	-	DCLK	
	Back Porch	Thbp	8	43	-	DCLK	
	Front Porch	Thfp	2	8	-	DCLK	
	Pulse Width	Thw	1	-	-	DCLK	
Vsync	Period Time	Tv	275	288	335	H	
	Display Period	Tvdisp	-	272	-	H	
	Back Porch	Tvbp	2	12	-	H	
	Front Porch	Tvfp	1	4	-	H	
	Pulse Width	Tvw	1	10	-	H	

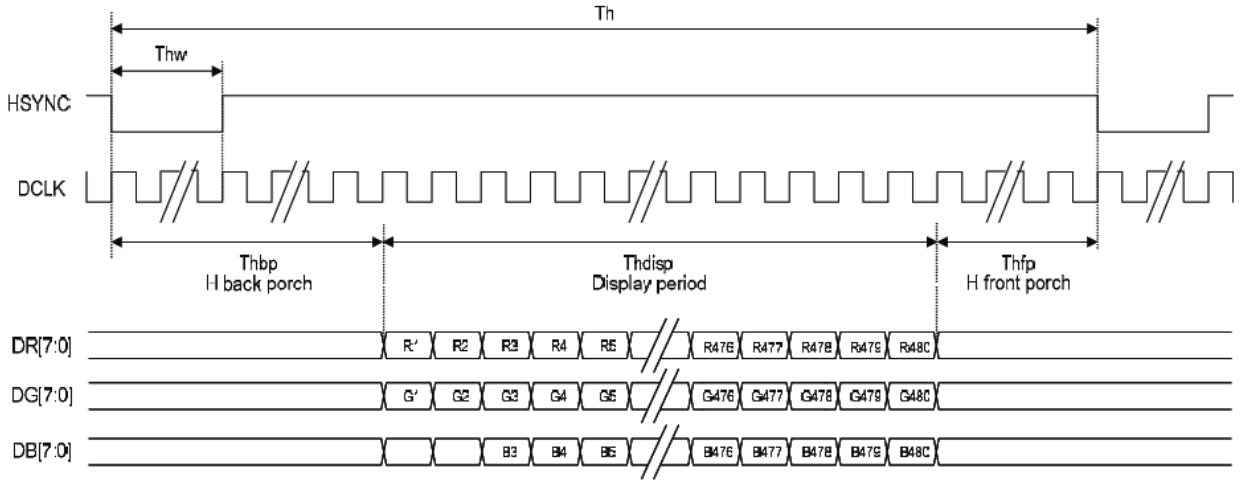

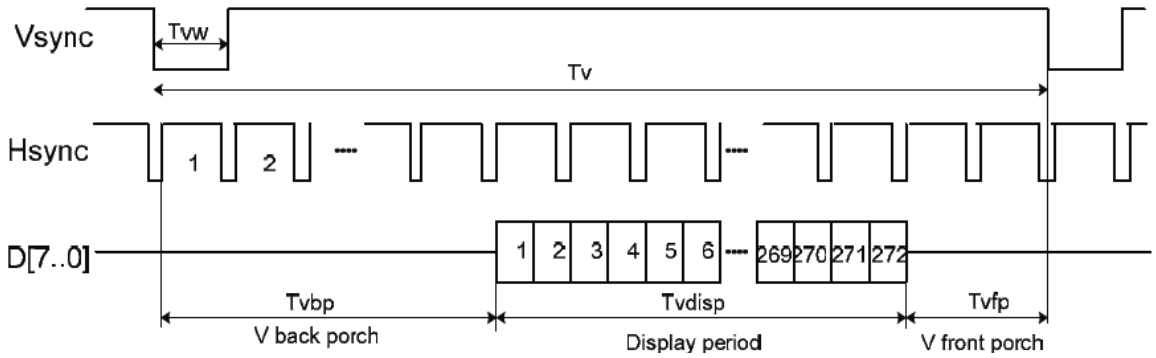

9.3 POWER ON / OFF SEQUENCE

9.3.1 Power ON Sequence

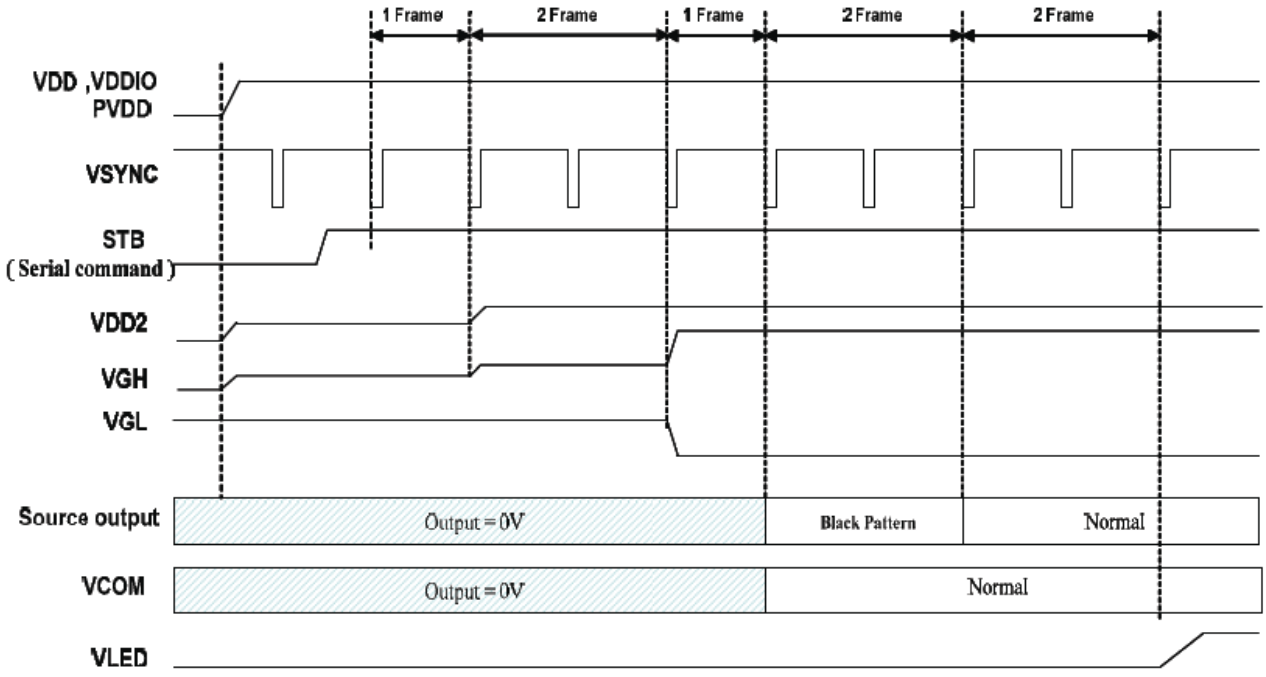

9.3.2 Power OFF Sequence

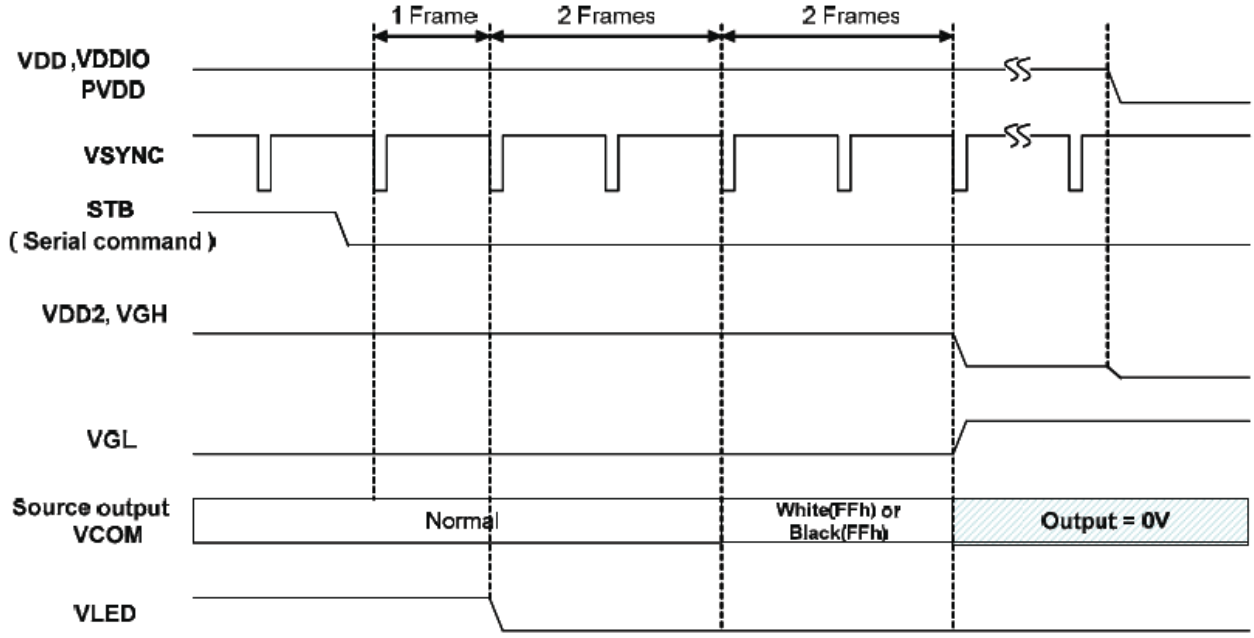

10 Test

No change on display and in operation under the following test condition.

Condition: Unless otherwise specified, tests will be conducted under the following condition.

Temperature: 20±5°C.

Humidity: 65±5%RH.

Tests will be not conducted under functioning state.

No.	Parameter	Condition	Notes
1	High Temperature Operating	70°C±2°C, 240hrs (Operation state).	
2	Low Temperature Operating	-20°C±2°C, 240hrs (Operation state).	1
3	High Temperature Storage	80°C±2°C, 240hrs.	2
4	Low Temperature Storage	-30°C±2°C, 240hrs.	1,2
5	High Temperature and High Humidity Operation Test	60°C±2°C, 90%, 240hrs	1,2
6	Vibration Test	Total fixed amplitude: 1.5mm. Vibration Frequency: 10~55Hz. One cycle 60 seconds to 3 direction of X, Y, Z each 15 minutes.	3
7	Electro Static Discharge Test (non-operating)	Panel Surface/Top Case: 150pF, 330 ohm Air: ±15kV, Contact: ±8kV	
8	Drop Test	To be measured after dropping from 60cm high on the concrete surface in packing state. 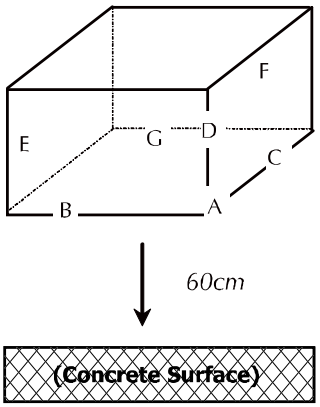 *Dropping method corner dropping:* *A corner: Once edge dropping.* *B, C, D edge: Once face dropping.* *E, F, G face: Once.*	

11 Dimensional Outlines

PIN FUNCTION

PIN	SYMBOL	PIN	SYMBOL
1	VSS	21	B0
2	VSS	22	B1
3	DVDD	23	B2
4	DVDD	24	B3
5	R0	25	B4
6	R1	26	B5
7	R2	27	B6
8	R3	28	B7
9	R4	29	VSS
10	R5	30	PCLK
11	R6	31	DISP
12	R7	32	HSYNC
13	G0	33	VSYNC
14	G1	34	NC
15	G2	35	NC(XR)
16	G3	36	NC(YD)
17	G4	37	NC(XL)
18	G5	38	NC(YU)
19	G6	39	LED K
20	G7	40	LED A

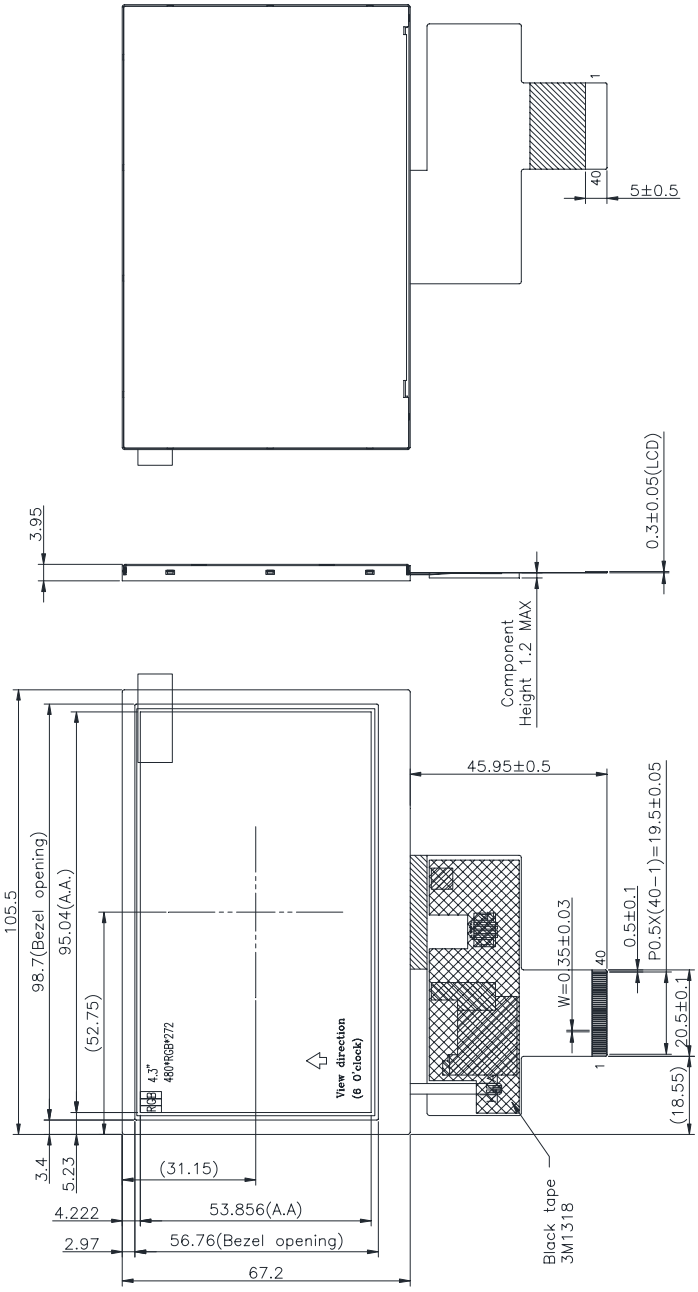

12 Incoming Inspection Standards

12.1 Inspection and Environment Conditions

12.1.1 Inspection Conditions:

(1)Inspection Distance: 35 cm±5cm

(2)View Angle : Light-on Inspection Angle：±5°

Cosmetic Inspection Angle：±45°

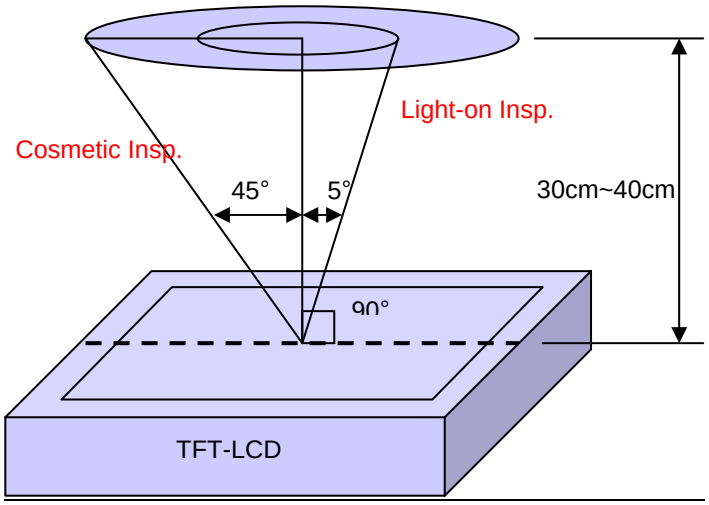

(perpendicular to LCD panel surface)

12.1.2 Environment Conditions:

Ambient Temperature		23℃±5℃
Ambient Humidity		55±10%RH
Ambient Illumination	Cosmetic Inspection	more than 600 Lux
	Functional Inspection	300~500 Lux

12.1.3 Sampling Conditions:

(1) Lot Size: Quantity of shipment lot per model

(2) Sampling Method:

Sampling Plan		MIL-STD-105E
		Normal Inspection, Single Sampling
		Level II
AQL	Major Defect	1.0%
	Minor Defect	1.5%

(3) The classification of Major(MA) and Minor(MI) defects is shown as 3. Inspection Criteria.

12.1.4 Inspection Criteria

12.1.4.1 Cosmetic Inspection(Panel):

Item	Judgment Criteria	Classification
Chipping on Panel	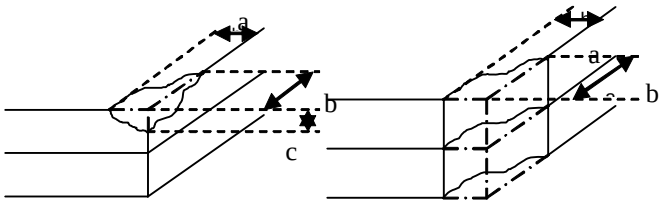 a≦3.0mm、b≦3.0mm、c≦t (Bottom glass thickness)	MA
Scratch on Panel *Note-2	W≦0.05mm or L< 5mm: Ignored 0.05mm<W≦0.1mm and L≦5mm: N≦5 W>0.1mm or L>5mm: Not allowed	MI
Bubble or Dent on Panel *Note-3	D≦0.2mm: Ignored 0.2mm<D≦0.3mm: N≦5 D>0.3mm: Not allowed	MI
Panel Crack	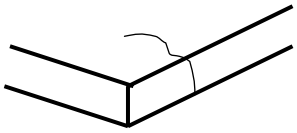 Not Allowed crack	MA
Bezel Deformation	Obvious deformation is not allowed.	MI
Bezel Oxidation	Not allowed if it rusts continuously over 1 cm (It is out of warranty with rusted tin plate)	MI
Bezel Scratch	L 20mm , W 0.2 , N 3	MI
Metal Squash Dent /Flange(Front Side)	D(W) 1,L 3,N 3;	MI
B/L High Voltage Wire Denudation	Not allowed	MA
Polarizer flaw or leak out resin	Defect is defined as the active area.	MI
Outline Dimension	Must in Spec, refer to related product spec.	MI

12.1.4.2 Functional Inspection:

<table>
<tr><th rowspan="2">Item</th><th colspan="4">Judgment Criteria</th><th rowspan="2">Classification</th></tr>
<tr><th colspan="2">Area(Note1)</th><th>I</th><th>O</th></tr>
<tr><td rowspan="11">Point Defect</td><td rowspan="3">Bright dot</td><td>Random</td><td colspan="2">2</td><td rowspan="11">MI</td></tr>
<tr><td>2 dots adjacent</td><td>0</td><td>0</td></tr>
<tr><td>3 dots adjacent or more</td><td>0</td><td>0</td></tr>
<tr><td rowspan="3">Dark dot</td><td>Random</td><td colspan="2">3</td></tr>
<tr><td>2 dots adjacent</td><td colspan="2">0</td></tr>
<tr><td>3 dots adjacent or more</td><td>0</td><td>0</td></tr>
<tr><td colspan="2">Total Dot Defect</td><td colspan="2">5</td></tr>
<tr><td rowspan="3">Distance</td><td>Distance between Bright and Bright dot</td><td colspan="2">L 5mm</td></tr>
<tr><td>Distance between Bright and Dark dot</td><td colspan="2">L 5mm</td></tr>
<tr><td>Distance between Dark dot</td><td colspan="2">L 5mm</td></tr>
<tr><td colspan="4">(1) It is defined as Point Defect if defect area > 0.5dot
(2) It is ignored if defect area≦0.5dot
(3)Weak point defect will be defined as Bright Dot if it can be observed through ND filter 5%(Full Screen Black Inspection)</td></tr>
<tr><td>Line Defect</td><td colspan="4">Obvious vertical or horizontal line defect is not allowed.</td><td>MA</td></tr>
<tr><td>Mura</td><td colspan="4">Not allowed if it can be observed through ND Filter 5 %</td><td>MI</td></tr>
<tr><td>Foreign Material
in spot shape
*Note-3</td><td colspan="4">D≦0.2mm: Ignored
0.2mm<D≦0.5mm: N≦8
D>0.5mm: Not allowed</td><td>MI</td></tr>
<tr><td>Foreign Material
in line
or spiral shape
*Note-4</td><td colspan="4">W≦0.05mm or L≦5mm: Ignored
0.05mm<W≦0.2mm and L1.0mm≦5mm: N≦8
W>0.2mm or L>5mm: Not allowed</td><td>MI</td></tr>
<tr><td>Display
Function Abnormal</td><td colspan="4">No Malfunction can be allowed</td><td>MA</td></tr>
</table>

Note-1： I/O Area Definition

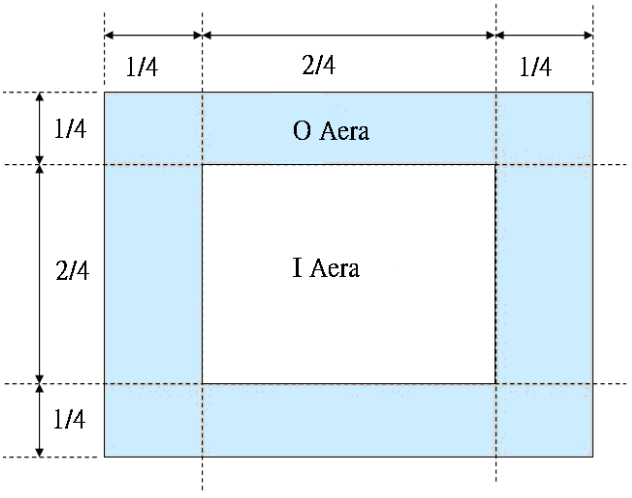

Note-2： Polarizer Scratch

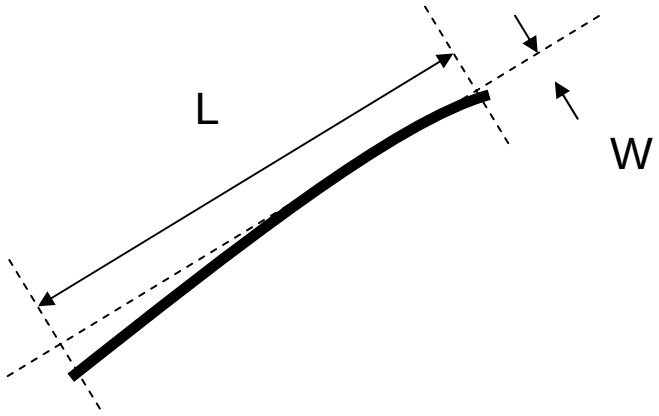

Note-3 : Spot Foreign Material

(W ≧L / 4)

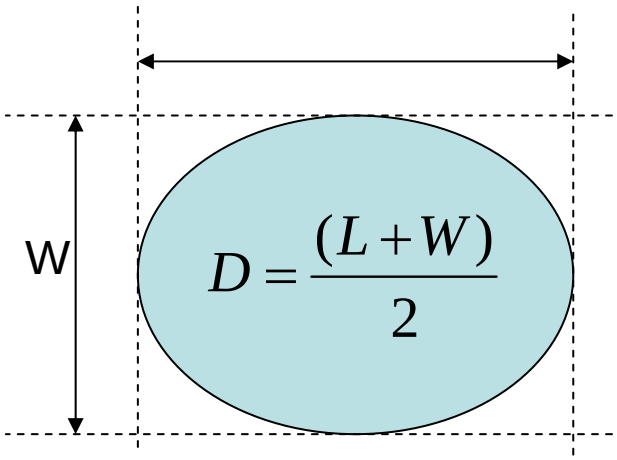

Note-4 : Line or Spiral Foreign Material

(W<L / 4)

