SPECIFICATIONS FOR LCD MODULE

Customer P/N:N86L-3918-L001/20
Bolymin No. BC1602AYPLJH$ VER.01

RoHS COMPLIANT

Customer : 富士通 コンポーネント **APPROVED BY:**

Date: / /

Distributor: 株式会社エヌ・ディ・エス **APPROVED BY:**

Date: / /

APPROVED BY	CHECKED BY	COMPOSED BY
R&D Manager 楊德祥 11/9.10	R&D Engineer 陳奇煌 11/9-10	FAE 江偉凱 11/9-10

BOLYMIN, INC.
5F, NO.38,Keya Road , Daya Township, Taichung County 42881, Taiwan, R.O.C.
Web Site:http://www.bolymin.com.tw TEL:+886-4-25658689 FAX:+886-4-25658698

Version	Contents	Date	Note
01	NEW VERSION	2011/01/05	SPEC.

C O N T E N T S

1. Numbering System
2. Precautions in use of LCD Modules
3. General Specification
4. Absolute Maximum Rating
5. Electrical Characteristics
6. Optical Characteristics
7. Interface Pin Function
8. Power supply for LCD Module and LCD operating voltage adjustment
9. Backlight information
10. Quality Assurance
11. Reliability
12. Appendix (Drawing , ST7066Ucontroller data)
    - 12-1 Drawing
    - 12-2 ST7066U controller data
        - 12-2.1 Function description
        - 12-2.2 C.G ROM table. table 2
        - 12-2.3 Instruction table
        - 12-2.4 Timing characteristics
        - 12-2.5 Initializing soft ware of LCM

1. Numbering System

	B	C	1602	A	Y	P	L	J	H	$
	0	1	2	3	4	5	6	7	8	9

0	Brand	Bolymin	
1	Module Type	C= character type G= graphic type P= TAB/TCP type	O= COG type F= COF type L=PLED/OLED
2	Format	2002=20 characters, 2 lines 12232= 122 x 32 dots	
3	Version No.	A type	
4	LCD Color	G=STN/gray Y=STN/yellow-green PLED/yellow-green C=color STN,OLED/RGB	B=STN/blue,OLED/blue F=FSTN T=TN D=OLED/blue+yellow A=OLED/blue+yellow+green
5	LCD Type	R=positive/reflective P=positive/transflective	M=positive/transmissive N=negative/transmissive
6	Backlight type/color	L=LED array/ yellow-green H=LED edge/white R=LED array/red G=LED edge/yellow-green F=RGB Q=LED edge/red N=No backlight	D=LED edge/blue E=EL/white B=EL/blue C=CCFL/white Y=LED Bottom/yellow O=LED array/orange K=LED edge/green A=LED edge/amber
7	CGRAM Font (applied only on character type)	J=English/Japanese Font E=English/European Font G=Chinese(simple) F=Chinese(traditional)	C=English/Cyrillic Font H=English/Hebrew Font A=English/Arabic Font
8	View Angle/ Operating Temperature	B=Bottom/Normal Temperature H=Bottom/Wide Temperature U=Bottom/Ultra wide Temperature	T=Top/Normal Temperature W=Top/Wide Temperature C=9H/Normal Temperature E=Top/ultra wide temperature
9	Special Code	3=3 volt logic power supply n=negative voltage for LCD c=cable/connector xxx=to be assigned on datasheet	t=temperature compensation for LCD p=touch panel $=RoHS

2. Precaution in use of LCD Module

(1) Avoid applying excessive shocks to the module or making any alterations or modifications to it.

(2) Don't make extra holes on the printed circuit board, modify its shape or change the components of LCD module.

(3) Don't disassemble the LCM.

(4) Don't operate it above the absolute maximum rating.

(5) Don't drop, bend or twist LCM.

(6) Soldering: only to the I/O terminals.

(7) Storage: please storage in anti-static electricity container and clean environment.

(8) Don't touch the elastmer connecter, especially insert a backlight panel (EL or CCFL)

3. General Specification

(1) Mechanical Dimension

Item	Dimension	Unit
Number of Characters	16characters x 2 Lines	-
Module dimension (L x W x H)	80.0 x 36.0 x12.7	mm
View area	66.0 x 16.0	mm
Active area	59.62 x 11.5	mm
Dot size	0.55 x 0.66	mm
Dot pitch	0.63 x 0.70	mm
Character size (L x W)	3.07 x 5.94	mm
Character pitch (L x W)	3.77 x 6.56	mm

(2) Controller IC: **ST7066U (or Equivalent) controller**

(3) Temperature Range

	Wide
Operating	-20 ~+70℃
Storage	-30 ~+80℃

4. Absolute Maximum Ratings

4.1 Electrical Absolute Maximum Ratings

(Vss=0V, Ta=25℃)

Item	Symbol	Min	Max	Unit
Supply Voltage (Logic)	Vdd-Vss	-0.3	7	V
Supply Voltage (LCD Driver)	Vdd-Vo	-0.3	10	V
Input Voltage	VI	Vss	Vdd	V
Wide Temperature Type	Top	-20	+70	℃
	Tstg	-30	+80	℃

4.2 Environmental Absolute Maximum Ratings

Item	Operating		Storage		Comment
	(Min.)	(Max.)	(Min.)	(Max.)	
Humidity	Note (2)		Note (2)		Without condensation
Vibration	--	4.9M/S^2	--	19.6M/S^2	XYZ Direction
Shock	--	29.4M/S^2	--	490M/S^2	XYZ Direction

Note (1) Ta = 0℃： 50Hr Max.

Note (2) Ta ≦40℃：90% RH MAX

Ta > 40℃：Absolute humidity must be lower than the humidity of 90% at 40℃.

5. Electrical Characteristics

Item	Symbol	Condition	Min	Typ	Max	Unit
Supply Voltage For Logic	Vdd-Vss	-	2.7	5.0	5.5	V
Supply Voltage For LCD ∗Wide Temp、Type	Vdd-Vo	∗Ta=-20℃	-	4.2	-	V
		Ta=0℃	-	-	-	V
		Ta=25℃	3.9	4.0	4.1	V
		Ta=50℃	-	-	-	V
		∗Ta=+70℃	-	3.8	-	V
Input High Volt.	V_{IH}	-	0.7* Vdd	-	Vdd	V
Input Low Volt.	V_{IL}	-	-0.3	-	0.6	V
Output High Volt.	V_{OH}	-	3.9	-	Vdd	V
Output Low Volt.	V_{OL}	-	-	-	0.4	V
Supply Current	Idd	Vdd=5V	-	1.2	-	mA

6. Optical Characteristics

a. STN

Item	Symbol	Condition	Min.	Typ.	Max.	Unit
View Angle	(V) θ	CR≧2	10		45	deg
	(H) φ	CR≧2	-30		30	deg
Contrast Ratio	CR	—		3		—
Response Time 25℃	T rise	—		100	150	ms
	T fall	—		150	200	ms

6.1 Definitions

■View Angles

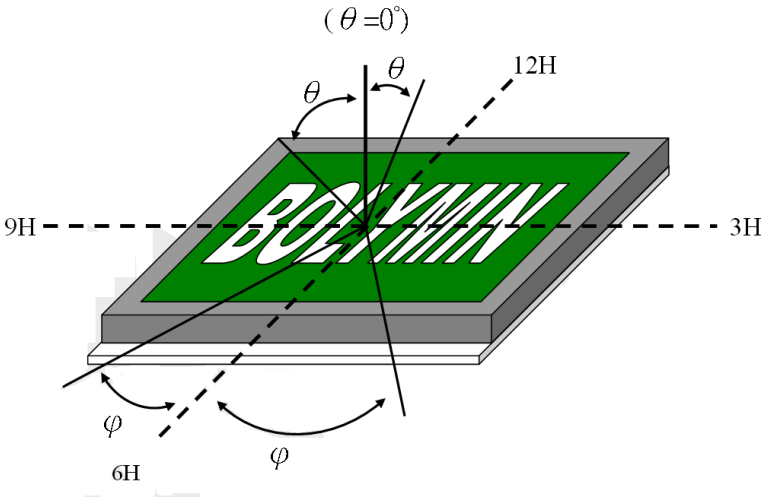

■Contrast Ratio

$$CR = \frac{\text{Brightness at selected state (BS)}}{\text{Brightness at non-selected state (Bns)}}$$

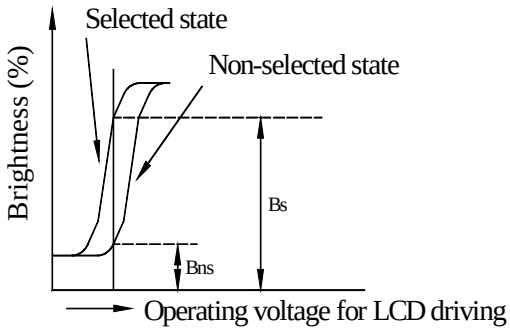

■Response Time

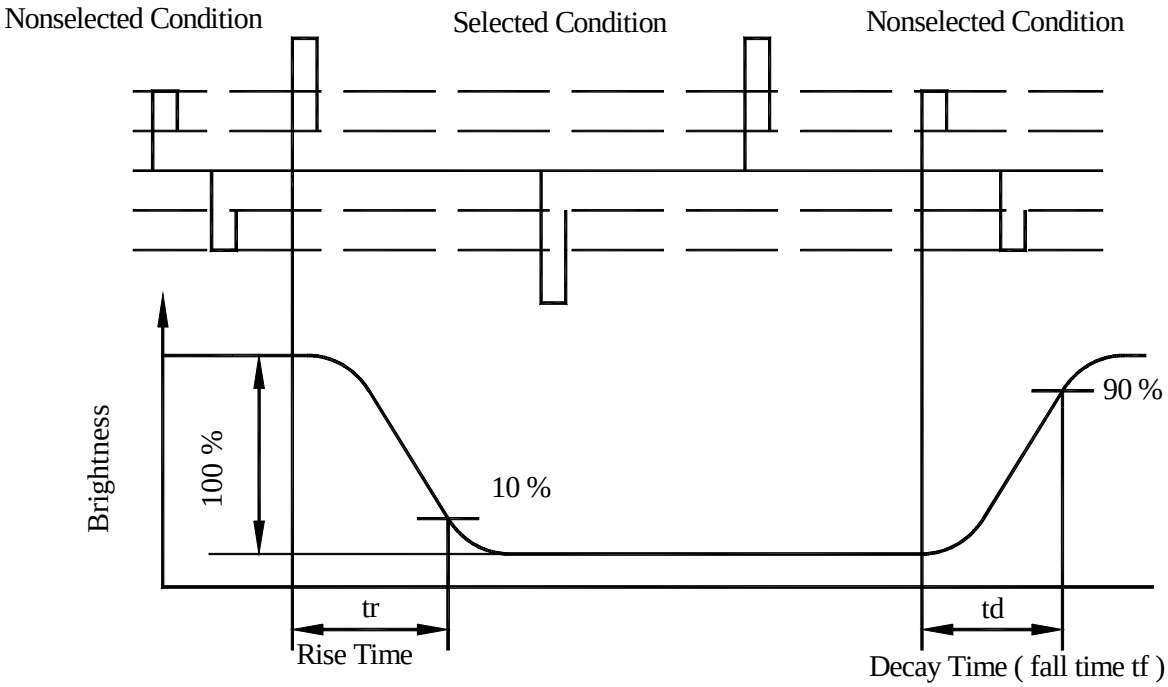

7. Interface Pin Function

Pin No.	Symbol	Level	Description
1	Vss	0V	Ground
2	Vdd	5.0V	Supply Voltage for logic
3	Vo	(Variable)	Operating voltage for LCD
4	RS	H/L	H:DATA, L:Instruction code
5	R/W	H/L	H:Read(MPU→Module)L:Write(MPU→Module)
6	E	H,H→L	Chip enable signal
7	DB0	H/L	Data bit 0
8	DB1	H/L	Data bit 1
9	DB2	H/L	Data bit 2
10	DB3	H/L	Data bit 3
11	DB4	H/L	Data bit 4
12	DB5	H/L	Data bit 5
13	DB6	H/L	Data bit 6
14	DB7	H/L	Data bit 7
15	A	—	Power supply for LED backlight (+)
16	K	—	Power supply for LED backlight (GND)

8. Power Supply for LCD Module and LCD Operating Voltage a Adjustment

＊Standard Type

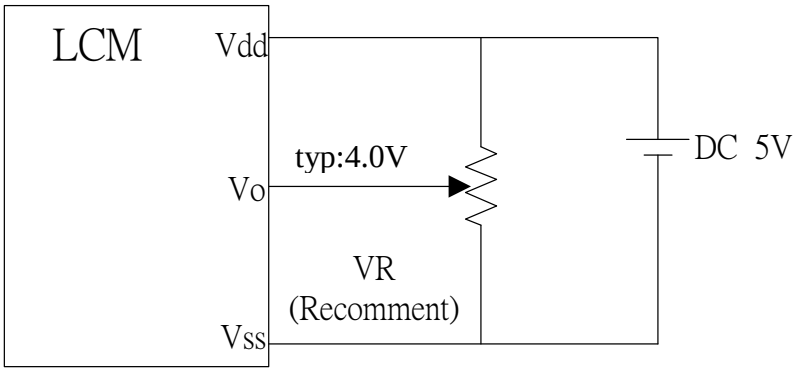

9.Backlight Information

9.1 Specification

(1) LED array / yellow-green

Parameter	Symbol	Min	Typ	Max	Unit	Test Condition
Supply Current	ILED	—	110	—	mA	V=4.2V
Supply Voltage	V	4.0	4.2	4.4	V	
Reverse Voltage	VR	—	—	8	V	
Luminous Intensity	IV	108.5	155	232	cd/m^2	ILED=100mA
Wave Length	λ p	570	572	575	nm	ILED=100mA
Life Time		—	20000	—	Hr.	ILED≦100mA
Color	Yellow Green					

9.2 Backlight driving methods

a. LED B/L drive from pin15 (LED+) pin16 (LED-)

a.1 array / yellow-green

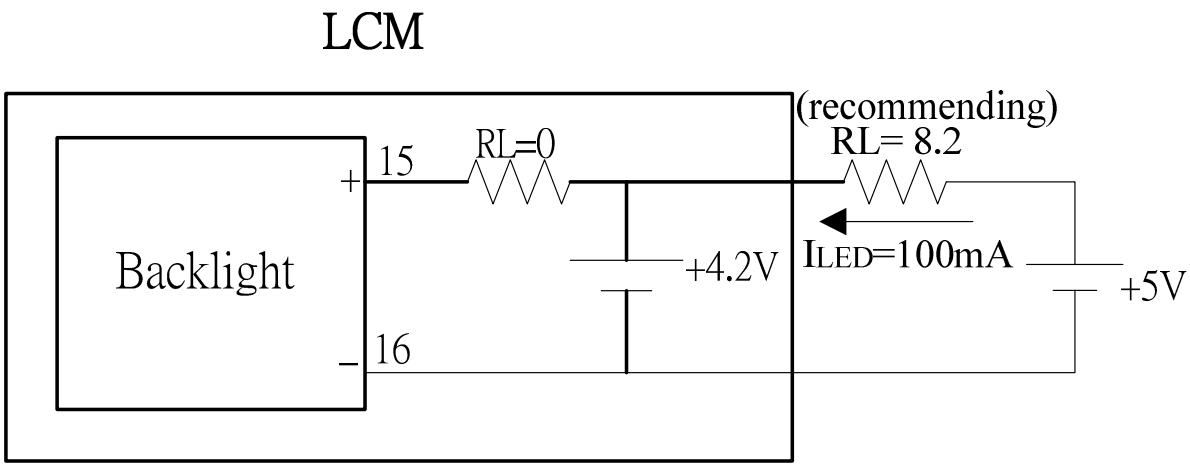

10. Quality Assurance

10.1 Inspection conditions

The LCD shall be inspected under 40W white fluorescent light.

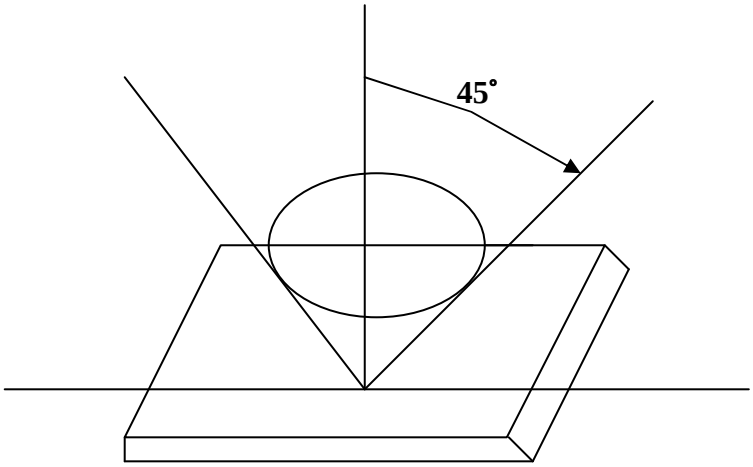

Definition of applicable Zones

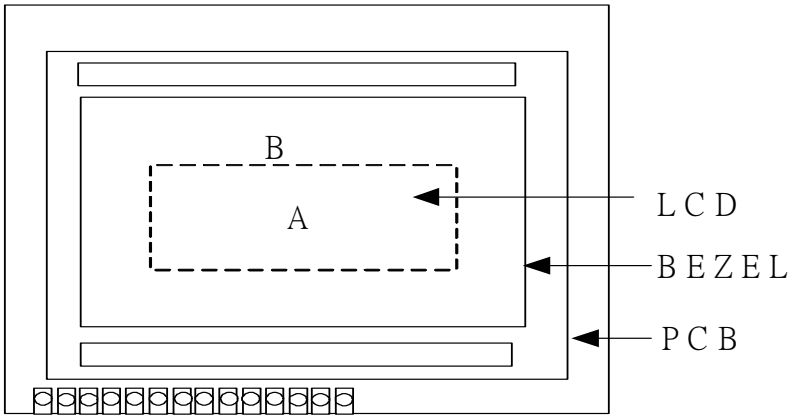

A :Display Area

B : Non-Display Area

10.2 Inspection Parameters

<table>
<tr><th>NO.</th><th>Parameter</th><th>Criteria</th></tr>
<tr><td>1</td><td>Black or White spots</td><td>
<table>
<tr><th rowspan="2">Zone / Dimension</th><th colspan="2">Acceptable Number</th><th rowspan="2">Class Of Defects</th><th rowspan="2">Acceptable Level</th></tr>
<tr><th>A</th><th>B</th></tr>
<tr><td>D＜0.15</td><td>*</td><td>*</td><td rowspan="4">Minor</td><td rowspan="4">2.5</td></tr>
<tr><td>0.15≦D≦0.2</td><td>4</td><td>4</td></tr>
<tr><td>0.2≦D≦0.25</td><td>2</td><td>2</td></tr>
<tr><td>D≦0.3</td><td>0</td><td>1</td></tr>
</table>
D=(Long + Short)/2 *: Disregard
</td></tr>
<tr><td>2</td><td>Scratch, Substances</td><td>
<table>
<tr><th rowspan="2">Zone / X(mm) Y(mm)</th><th colspan="2">Acceptable Number</th><th rowspan="2">Class Of Defects</th><th rowspan="2">Acceptable Level</th></tr>
<tr><th>A</th><th>B</th></tr>
<tr><td>*</td><td>0.04≧W</td><td>*</td><td>*</td><td rowspan="4">Minor</td><td rowspan="4">2.5</td></tr>
<tr><td>3.0≧L</td><td>0.06≧W</td><td>4</td><td>4</td></tr>
<tr><td>2.0≧L</td><td>0.08≧W</td><td>2</td><td>3</td></tr>
<tr><td>—</td><td>0.1＜W</td><td>0</td><td>1</td></tr>
</table>
X: Length Y : Width * : Disregard
Total defects should not exceed 4/module
</td></tr>
<tr><td>3</td><td>Air Bubbles (between glass & polarizer)</td><td>
<table>
<tr><th rowspan="2">Zone / Dimension</th><th colspan="2">Acceptable Number</th><th rowspan="2">Class Of Defects</th><th rowspan="2">Acceptable Level</th></tr>
<tr><th>A</th><th>B</th></tr>
<tr><td>D≦0.2</td><td>*</td><td>*</td><td rowspan="3">Minor</td><td rowspan="3">2.5</td></tr>
<tr><td>0.2＜D≦0.5</td><td>2</td><td>*</td></tr>
<tr><td>0.5＜D</td><td>0</td><td>1</td></tr>
</table>
*: Disregard
Total defects shall not excess 3/module.
</td></tr>
</table>

4	Uniformity	(1) Pixel shape (with Dent) 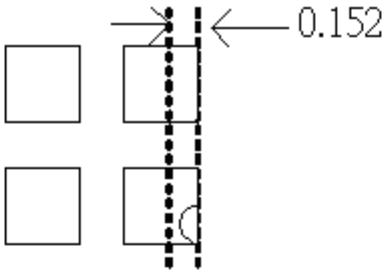 (2) Pixel shape (With Projection) 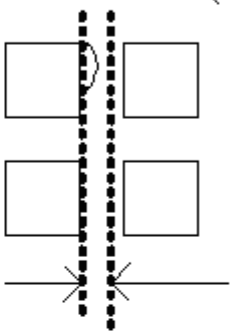 (3) Pin hole 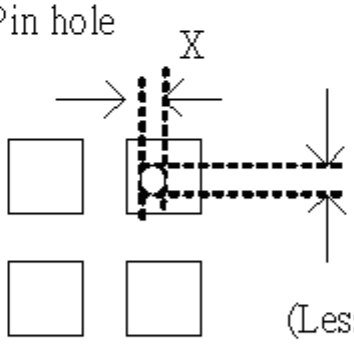 (Less than 0.1mm is no counted) (4)Deformation 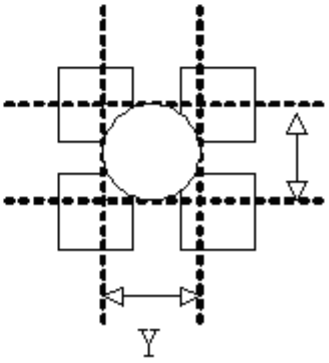 Total acceptable number : 1/pixel,5/cell

11. Reliability

■Content of Reliability Test

Environmental Test				
No.	Test Item	Content of Test	Test Condition	Applicable Standard
1	High Temperature storage	Endurance test applying the high storage temperature for a long time.	80℃ 96hrs	——
2	Low Temperature storage	Endurance test applying the high storage temperature for a long time.	-30℃ 96hrs	——
3	High Temperature Operation	Endurance test applying the electric stress (Voltage & Current) and the thermal stress to the element for a long time.	70℃ 96hrs	——
4	Low Temperature Operation	Endurance test applying the electric stress under low temperature for a long time.	-20℃ 96hrs	——
5	Humidity Test	Endurance test applying the high humidity storage for a long time.	40℃,90%RH 96hrs	——
6	Thermal Shock Test	Endurance test applying the low and high temperature cycle. -30℃ 25℃ 80℃ 30min 5min 30min 1 cycle	-30℃/ 80℃ 5 cycles	——
7	Vibration test	Endurance test applying the vibration during transportation and using.	Total Fixed Amplitude:1.5mm Vibration Frequency :10~55Hz One cycle 60 seconds to 3 direction of X,Y,Z for each 15minutes	——

***Supply voltage for logic system=5V. Supply voltage for LCD system =Operating voltage at 25℃

12. Appendix (Drawing , ST7066U controller data)

12-1 Drawing

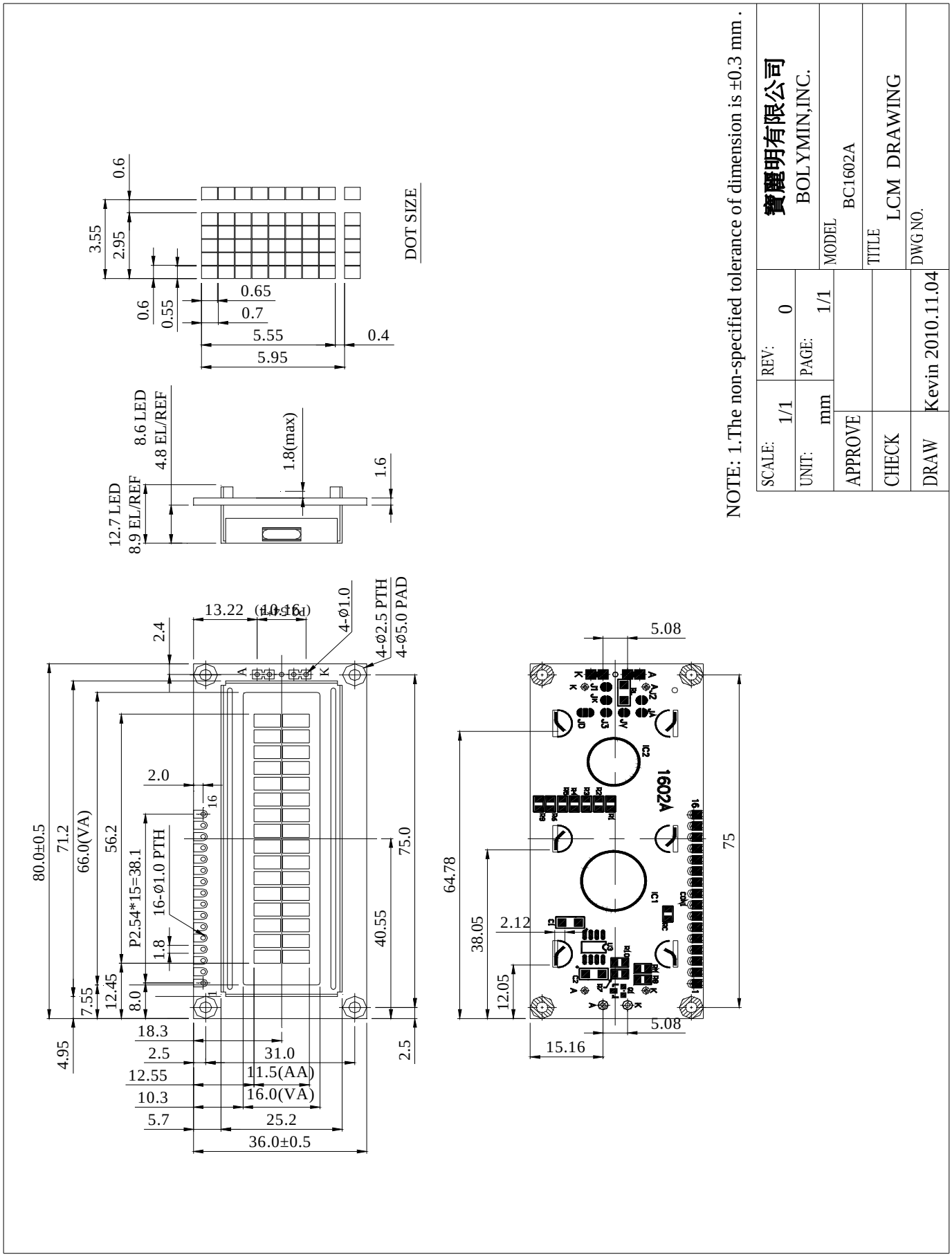

12-2. ST7066U controller data

12-2.1 Function description

The LCD display Module is built in a LSI controller, the controller has two 8-bit registers, an instruction register (IR) and a data register (DR).

The IR stores instruction codes, such as display clear and cursor shift, and address information for display data RAM (DDRAM) and character generator (CGRAM). The IR can only be written from the MPU. The DR temporarily stores data to be written or read from DDRAM or CGRAM. When address information is written into the IR, then data is stored into the DR from DDRAM or CGRAM. By the register selector (RS) signal, these two registers can be selected.

RS	R/W	Operation
0	0	IR write as an internal operation (display clear, etc.)
0	1	Read busy flag (DB7) and address counter (DB0 to DB7)
1	0	Write data to DDRAM or CGRAM (DR to DDRAM or CGRAM)
1	1	Read data from DDRAM or CGRAM (DDRAM or CGRAM to DR)

Busy Flag (BF)

When the busy flag is 1, the controller LSI is in the internal operation mode, and the next instruction will not be accepted. When RS=0 and R/W=1, the busy flag is output to DB7. The next instruction must be written after ensuring that the busy flag is 0.

Address Counter (AC)

The address counter (AC) assigns addresses to both DDRAM and CGRAM

Display Data RAM (DDRAM)

This DDRAM is used to store the display data represented in 8-bit character codes. Its extended capacity is 80×8 bits or 80 characters. Below figure is the relationship between DDRAM addresses and positions on the liquid crystal display.

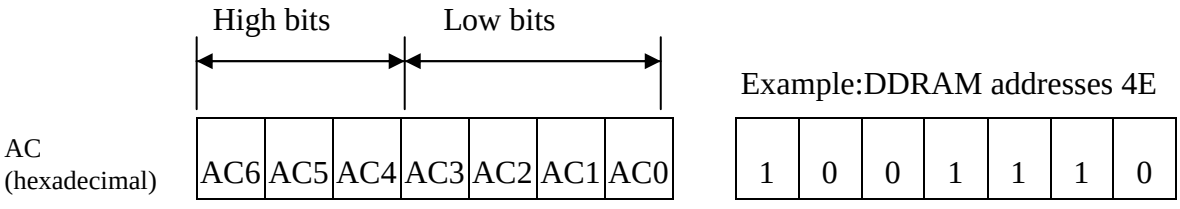

DDRAM Address

Display position DDRAM address

1	2	3	4	5	6	7	8	9	10	11	12	13	14	15	16
00	01	02	03	04	05	06	07	08	09	0A	0B	0C	0D	0E	0F
40	41	42	43	44	45	46	47	48	49	4A	4B	4C	4D	4E	4F

Example: 2-Line by 16-Character Display

Character Generator ROM (CGROM)

The CGROM generate 5×8 dot or 5×10 dot character patterns from 8-bit character codes. See Table 2.

Character Generator RAM (CGRAM)

In CGRAM, the user can rewrite character by program. For 5×8 dots, eight character patterns can be written, and for 5×10 dots, four character patterns can be written.

Write into DDRAM the character code at the addresses shown as the left column of table 1. To show the character patterns stored in CGRAM.

Relationship between CGRAM Addresses, Character Codes (DDRAM) and Character Patterns (CGRAM Data)

For 5 * 8 dot character patterns

Character Codes (DDRAM data)	CGRAM Address		Character Patterns (CGRAM data)		
7 6 5 4 3 2 1 0	5 4 3 2 1 0		7 6 5 4 3 2 1 0		
High Low	High Low		High Low		
		0 0 0	* * *	■ ■ ■ ■ 0	Character pattern(1)
		0 0 1	* * *	■ 0 0 0 ■	
		0 1 0	* * *	■ 0 0 0 ■	
		0 1 1	* * *	■ ■ ■ ■ 0	
0 0 0 0 * 0 0 0	0 0 0	1 0 0	* * *	■ 0 ■ 0 0	
		1 0 1	* * *	■ 0 0 ■ 0	
		1 1 0	* * *	■ 0 0 0 ■	
		1 1 1	* * *	0 0 0 0 0	Cursor pattern
		0 0 0	* * *	■ 0 0 0 ■	Character pattern(2)
		0 0 1	* * *	0 ■ 0 ■ 0	
		0 1 0	* * *	■ ■ ■ ■ ■	
		0 1 1	* * *	0 0 ■ 0 0	
0 0 0 0 * 0 0 1	0 0 1	1 0 0	* * *	■ ■ ■ ■ ■	
		1 0 1	* * *	0 0 ■ 0 0	
		1 1 0	* * *	0 0 ■ 0 0	
		1 1 1	* * *	0 0 0 0 0	Cursor pattern
		0 0 0	* * *		
		0 0 1			
0 0 0 0 * 1 1 1	1 1 1	1 0 0			
		1 0 1			
		1 1 0			
		1 1 1	* * *		

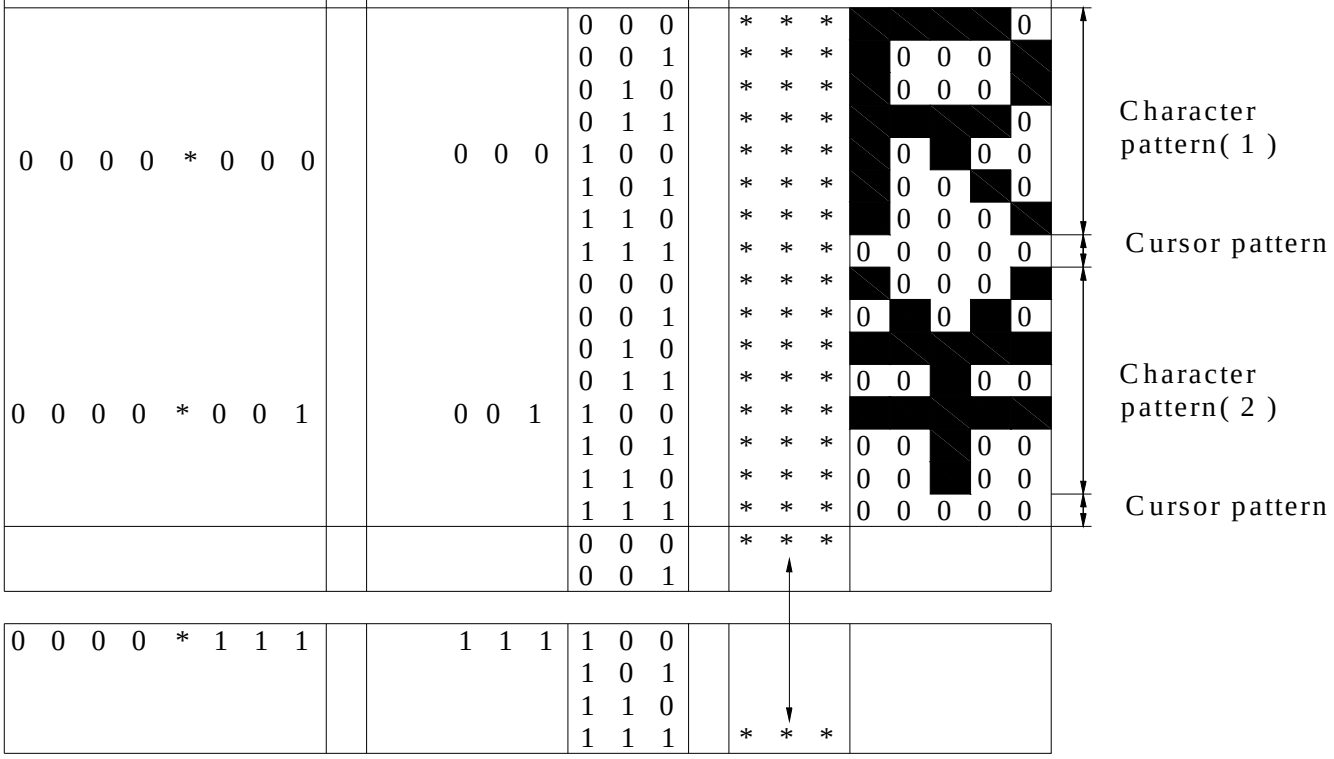

For 5 * 10 dot character patterns

Character Codes (DDRAM data)	CGRAM Address		Character Patterns (CGRAM data)		
7 6 5 4 3 2 1 0	5 4 3 2 1 0		7 6 5 4 3 2 1 0		
High Low	High Low		High Low		
		0 0 0 0	* * *	0 0 0 0 0	Character pattern
		0 0 0 1	* * *	0 0 0 0 0	
		0 0 1 0	* * *	■ 0 ■ ■ 0	
		0 0 1 1	* * *	■ ■ 0 0 ■	
		0 1 0 0	* * *	■ 0 0 0 ■	
0 0 0 0 * 0 0 0	0 0	0 1 0 1	* * *	■ 0 0 0 ■	
		0 1 1 0	* * *	■ ■ ■ ■ 0	
		0 1 1 1	* * *	■ 0 0 0 0	
		1 0 0 0	* * *	■ 0 0 0 0	
		1 0 0 1	* * *	■ 0 0 0 0	
		1 0 1 0	* * *	0 0 0 0 0	Cursor pattern
		1 1 1 1	* * *	* * * * *	

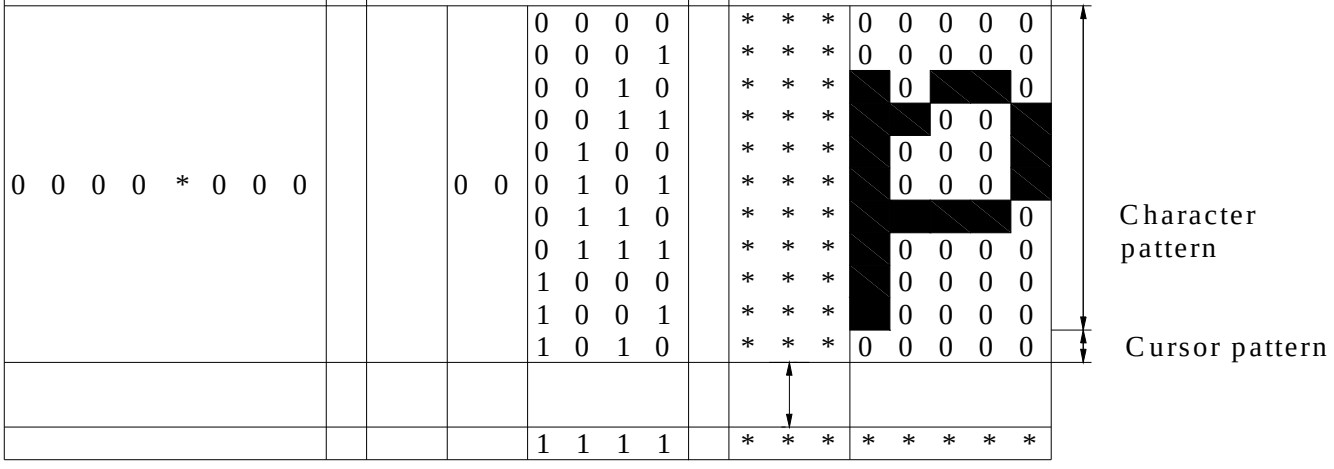

■ : " High "

12-2.2 C.G ROM table. table 2

Code J: English – Japanese Font

Upper 4 bit / Lower 4 bit	LLLL	LLLH	LLHL	LLHH	LHLL	LHLH	LHHL	LHHH	HLLL	HLLH	HLHL	HLHH	HHLL	HHLH	HHHL	HHHH
LLLL	CG RAM (1)															
LLLH	(2)															
LLHL	(3)															
LLHH	(4)															
LHLL	(5)															
LHLH	(6)															
LHHL	(7)															
LHHH	(8)															
HLLL	(1)															
HLLH	(2)															
HLHL	(3)															
HLHH	(4)															
HHLL	(5)															
HHLH	(6)															
HHHL	(7)															
HHHH	(8)															

12-2.3 Instruction table

Instruction	Instruction Code										Description	Execution time (fosc=270Khz)
	RS	R/W	DB7	DB6	DB5	DB4	DB3	DB2	DB1	DB0		
Clear Display	0	0	0	0	0	0	0	0	0	1	Write “00H” to DDRAM and set DDRAM address to “00H” from AC	1.52ms
Return Home	0	0	0	0	0	0	0	0	1	—	Set DDRAM address to “00H” from AC and return cursor to its original position if shifted. The contents of DDRAM are not changed.	1.52ms
Entry Mode Set	0	0	0	0	0	0	0	1	I/D	SH	Assign cursor moving direction and enable the shift of entire display.	37 μs
Display ON/OFF Control	0	0	0	0	0	0	1	D	C	B	Set display (D), cursor (C), and blinking of cursor (B) on/off control bit.	37 μs
Cursor or Display Shift	0	0	0	0	0	1	S/C	R/L	—	—	Set cursor moving and display shift control bit, and the direction, without changing of DDRAM data.	37 μs
Function Set	0	0	0	0	1	DL	N	F	—	—	Set interface data length (DL:8-bit/4-bit), numbers of display line (N:2-line/1-line)and, display font type (F:5×11 dots/5× 8 dots)	37 μs
Set CGRAM Address	0	0	0	1	AC5	AC4	AC3	AC2	AC1	AC0	Set CGRAM address in address counter.	37 μs
Set DDRAM Address	0	0	1	AC6	AC5	AC4	AC3	AC2	AC1	AC0	Set DDRAM address in address counter.	37 μs
Read Busy Flag and Address	0	1	BF	AC6	AC5	AC4	AC3	AC2	AC1	AC0	Whether during internal operation or not can be known by reading BF. The contents of address counter can also be read.	0 μs
Write Data to RAM	1	0	D7	D6	D5	D4	D3	D2	D1	D0	Write data into internal RAM (DDRAM/CGRAM).	37 μs
Read Data from RAM	1	1	D7	D6	D5	D4	D3	D2	D1	D0	Read data from internal RAM (DDRAM/CGRAM).	37 μs

12-2.4 Timing characteristics

12-2.4.1 Write Operation

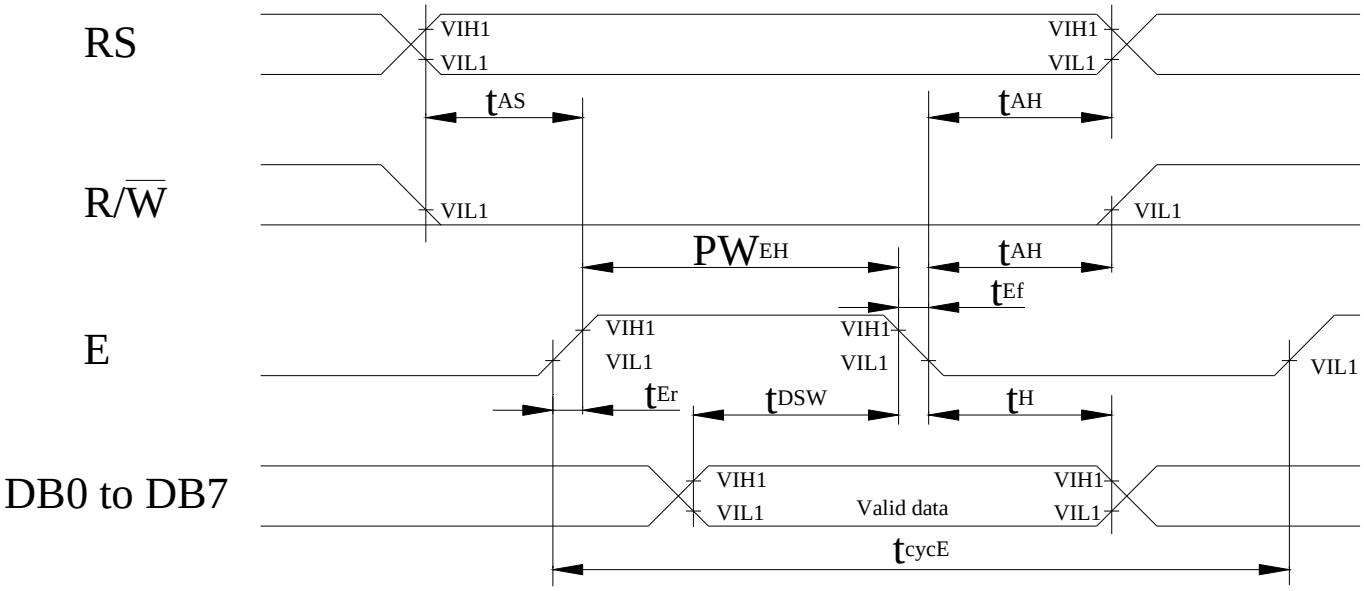

Ta=25℃,Vdd=5.0±0.5V

Item	Symbol	Min	Typ	Max	Unit
Enable cycle time	t_{cycE}	1200	-	-	ns
Enable pulse width (high level)	PW_{EH}	140	-	-	ns
Enable rise/fall time	t_{Er},t_{Ef}	-	-	25	ns
Address set-up time (RS, R/W to E)	t_{AS}	0	-	-	ns
Address hold time	t_{AH}	10	-	-	ns
Data set-up time	t_{DSW}	40	-	-	ns
Data hold time	t_H	10	-	-	ns

12-2.4.2 Read Operation

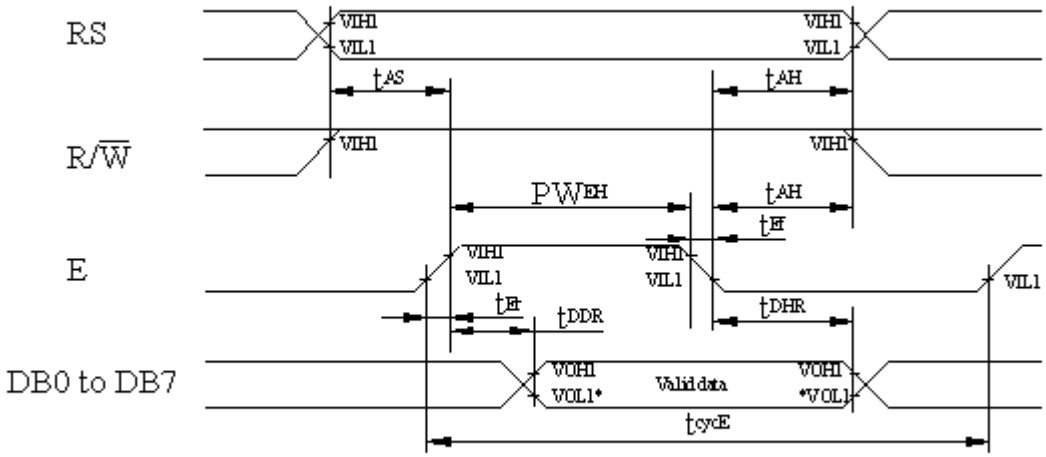

Ta=25℃,Vdd=5.0±0.5V

Item	Symbol	Min	Typ	Max	Unit
Enable cycle time	t_{cycE}	1200	-	-	ns
Enable pulse width (high level)	PW_{EH}	140	-	-	ns
Enable rise/fall time	t_{Er},t_{Ef}	-	-	25	ns
Address set-up time (RS, R/W to E)	t_{AS}	0	-	-	ns
Address hold time	t_{AH}	10	-	-	ns
Data delay time	t_{DDR}	-	-	100	ns
Data hold time	t_{DHR}	10	-	-	ns

12-2.5 Initializing soft ware of LCM

12-2.5.1 8-bit interface

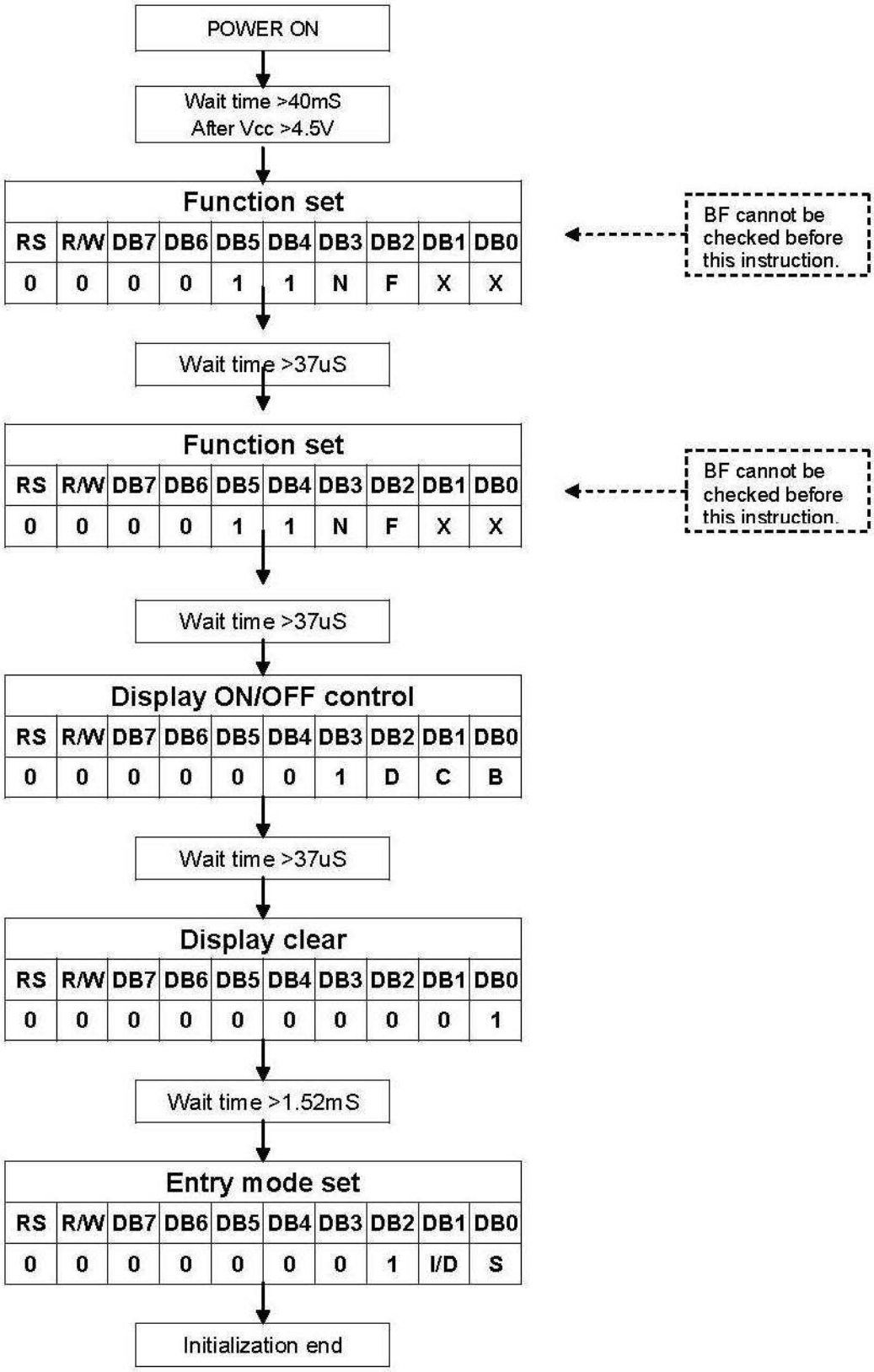

12-2.5.2 4-bit interface

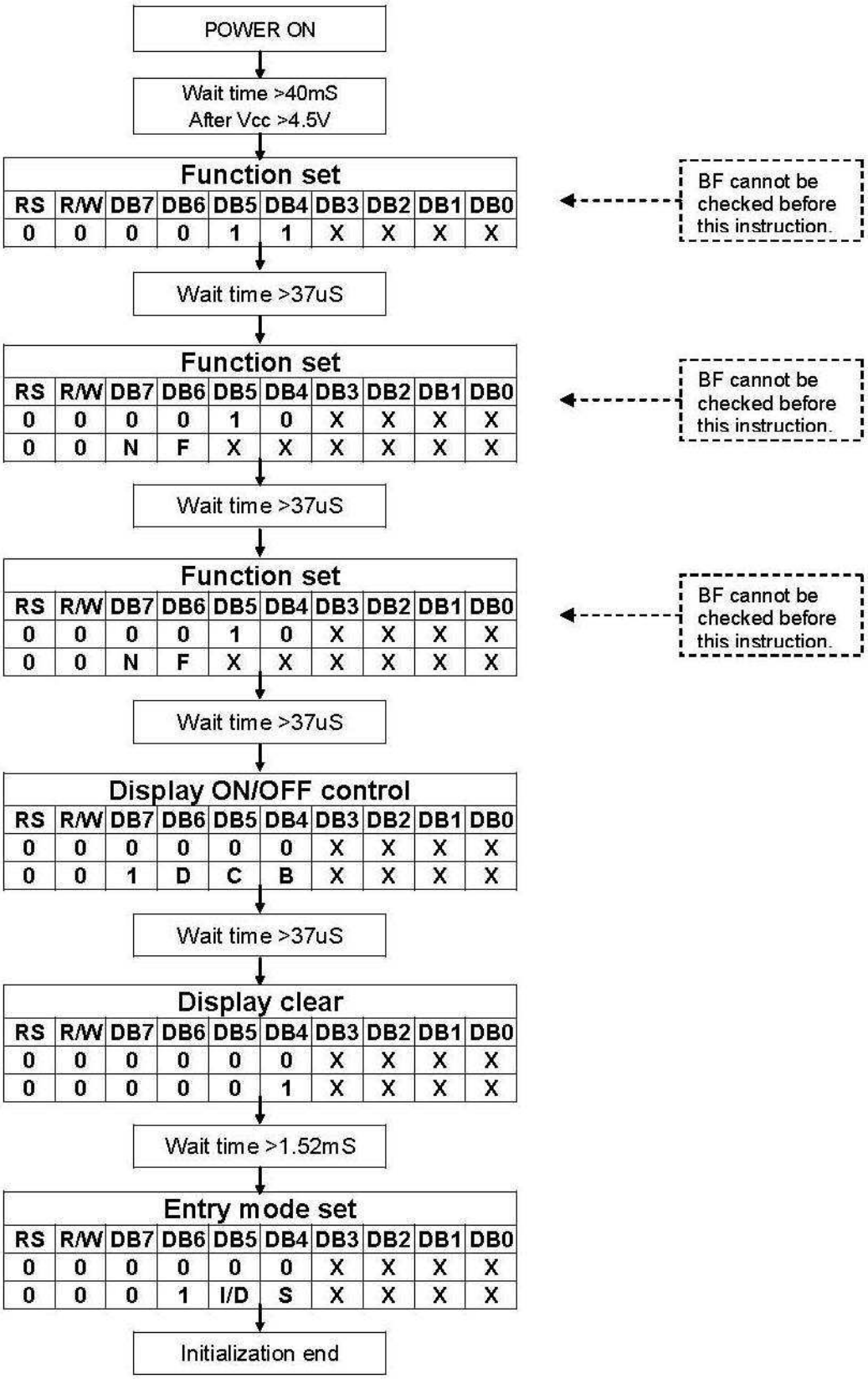

13. Packing

1. Lay bubble warps inside of box first and put in partitions later.



2. stick label on back side of products.
(manufacturer order No.090703006-2009.07.03.006,manufacturer date:2009/08/17)



3. Put products into pink anti-static bag and fold redundant tightly.



4. Put wrapped parts into each slot gradually until all slots been loaded fully. Put bubble warps on the top.(45pcs/box)





5. Seal up box and stick product logo on MODEL column and write down QTY ， Using stamp or sticker to mark with QC inspection date in INSP column.

