WIZ610wi User's Manual

(Version 1.9.1)



©2009 WIZnet Co., Ltd. All Rights Reserved.

☞ For more information, visit our website at http://www.wiznet.co.kr

Upgrade History

Date	Version	Comment
2009-01-31	V1.0	Release
2009-03-16	V1.1	-Gateway mode 8080 port access added -Client mode WAN setting added -Serial Packing Condition added -Serial Command added
2009-05-18	V.1.2	-Client mode IP setting amended -Power Consumption fact amended -IGMP function added -Server connection trying interval function added on the serial client mode. -Data Packet ConditionTime(Second→Millisecond)
2009-06-18	V.1.3	-Serial Command Added
2009-07-14	V.1.4	-Serial Command Amended
2009-08-11	V.1.5	-Serial Command Added Server-Client connection status checking -Reference Schematic Amended(Pin No. 6, 7)
2009-10-30	V.1.6	-Pin description (table 9) Amended. GPIO7 -> nRS232_LED -Reference Schematic Amended (Pin No. 5) -Wizard Program introduction Added
2010-03-09	V.1.7	-Serial Command Added *Socket Connection Status Checking *TCP Server setup(IP address or Domain Name) -SSL module added -Default SSID is changed to 'WLANAP' -Serial to WiFi Reference schematic Added
2010-08-03	V.1.8	-Serial command amended
2010-12-01	V.1.9	-Serial command modified & amended -Serial max baud rate modified (Max 921,600bps) -Temperature specification modified -Aging test report added.
2011-01-25	V.1.9.1	-Pin pitch information added at Fig.36

WIZnet's Online Technical Support

If you have any questions about our products, please visit our website and submit your questions on the Q&A Board. We will reply your questions as soon as possible

COPYRIGHT NOTICE

Copyright 2009 WIZnet Co., Ltd. All Rights Reserved.

Technical Support: support@wiznet.co.kr
Sales & Distribution: sales@wiznet.co.kr

For more information, visit our website at http://www.wiznet.co.kr

Contents

1. Introduction 1
    1.1 Product Specification 3
        1.1.1 WIZ610wi Module 3
        1.1.2 WIZ610wi Test Board 5
2. Getting Started 6
    2.1. Hardware Installation 6
    2.2. Configuration 7
        2.2.1 Wizard Program 7
        2.2.2 Connecting the Web page of WIZ610wi 10
        2.2.3 Checking Status 11
        2.2.4 Network Setting 13
        2.2.5. Wireless Setting 15
            2.2.5.1. Mode Selection 15
            2.2.5.2. IP Configuration in Each Mode 16
            2.2.5.3. Access Point Setup 18
            2.2.5.4. Gateway Setup 24
            2.2.5.5. Client Setup 27
        2.2.6. Serial Setting 29
        2.2.7. Security Setup 33
        2.2.8. Others 33
            2.2.8.1. Password 33
            2.2.8.2. Log 34
            2.2.8.3. Upgrade 34
            2.2.8.4 Factory Default 35
            2.2.8.5. Reboot 37
3. Pin Assignment and Module Size 38
4. Demonstration and Test 41
5. Serial Configuration 45
6. Reference Schematics 62
    6.1 WIZ610wi Module Pin assign 62
    6.2 External PHY interface using MII 63
    6.3 RS-232C interface 64
    6.4 Serial to WiFi interface 65

7. Aging test report 66
7.1 Test environment 66
7.2 Test condition 66
7.3 Test result 67

Figures

FIGURE 1. WIZ610WI TEST BOARD 5
FIGURE 2. WIZ610WI WIZARD PROGRAM 7
FIGURE 3. WIZ610WI TELNET WINDOW 8
FIGURE 4. WIZ610WI WIZARD PROGRAM 8
FIGURE 5. WIZ610WI WIZARD PROGRAM 9
FIGURE 6. CONNECTING TO THE WEB PAGE OF WIZ610WI 10
FIGURE 7. INPUT ID & PASSWORD 10
FIGURE 8. SYSTEM DATA 11
FIGURE 9. ACTIVE CLIENTS 12
FIGURE 10. NETWORK SETTING 13
FIGURE 11. ACTIVE DHCP CLIENT TABLE 14
FIGURE 12. OPERATION MODE 15
FIGURE 13. CHANGING OPERATION MODE 15
FIGURE 14. ACCESS POINT MODE - 1 16
FIGURE 15. ACCESS POINT MODE -2 16
FIGURE 16. GATEWAY MODE 17
FIGURE 17. CLIENT MODE 17
FIGURE 18. AP MODE SETTINGS 18
FIGURE 19. WIRELESS SECURITY SETUP 19
FIGURE 20. WIRELESS ADVANCED SETTINGS 21
FIGURE 21. WIRELESS ACCESS CONTROL 22
FIGURE 22. WDS SETTING 23
FIGURE 23. GATEWAY SETUP 24
FIGURE 24. WAN PORT CONFIGURATION 25
FIGURE 25. WAN ACCESS TYPE – STATIC IP 25
FIGURE 26. WAN ACCESS TYPE – DHCP CLIENT 26
FIGURE 27. WAN ACCESS TYPE - PPPOE 27
FIGURE 28. CLIENT SETUP 27
FIGURE 29. SITE SURVEY 28
FIGURE 30. SERIAL TO ETHERNET CONFIGURATION 29
FIGURE 31. PASSWORD SETUP 34
FIGURE 32. SYSTEM LOG 34
FIGURE 33. UPGRADE FIRMWARE 35

FIGURE 34. REBOOT SYSTEM 37
FIGURE 35. WIZ610WI PIN MAP 38
FIGURE 36. WIZ610WI BOARD DIMENSIONS (UNIT : MM) 40
FIGURE 37. SERIAL TERMINAL PROGRAM CONFIGURATION 42
FIGURE 38. NETWORK TERMINAL PROGRAM CONFIGURATION 43
FIGURE 39. RECEIVED DATA BY NETWORK TERMINAL PROGRAM 43
FIGURE 40. DEVICE TERMINAL PROGRAM 44
FIGURE 41. WIZ610WI MODULE PIN ASSIGNMENT 62
FIGURE 42. SCHEMATIC - EXTERNAL PHY INTERFACE USING MII 63
FIGURE 43. SCHEMATIC – RS-232C INTERFACE 64
FIGURE 44. SCHEMATIC – SERIAL TO WIFI REFERENCE SCHEMATIC 65
FIGURE 43. AGING TEST ENVIRONMENT 66

Tables

TABLE 1. PRODUCTS CONTENTS. 3
TABLE 2. PRODUCTS SPECIFICATION - WIRELESS 3
TABLE 3. PRODUCTS SPECIFICATION - HARDWARE 4
TABLE 4. PRODUCTS SPECIFICATION - SOFTWARE 4
TABLE 5. SYSTEM DATA 12
TABLE 6. AUTHENTICATION METHOD 20
TABLE 7. WEP CONFIGURATION 20
TABLE 8. WIRELESS ADVANCED SETTINGS 22
TABLE 9. FACTORY DEFAULT VALUE 36
TABLE 10. WIZ610WI PIN FUNCTION 39
TABLE 11. SERIAL CONFIGURATION FRAME FORMAT 45
TABLE 12. SERIAL CONFIGURATION REPLY FRAME FORMAT 45
TABLE 13. SERIAL CONFIGURATION STX & ETX 45
TABLE 14. SERIAL CONFIGURATION REPLY CODE 46
TABLE 15. WIZ610WI PIN ASSIGNMENT 63
TABLE 15. AGING TEST RESULT 67

1. Introduction

WIZ610wi is the gate way module which provides a bridge for RS-232 or Ethernet to IEEE802.11 b/g wireless communications. Devices with the interface of RS-232 serial or Ethernet can established a wireless network which can enable remote monitoring, management and controlling.

Main Features

- Embedded 802.11b/g Wireless Networking
- Access Point, Client, Gateway, Serial to WLAN mode Supported
- Ethernet to Wireless Bridging
- Security with 64/128 bit WEP, WPA, WPA2(AES)
- MII, UART, U.FL(WLAN) Interface
- Ready to use serial to wireless application
- Max 25Mbps Data Streaming
- Compact Size : 39mm X 32mm X 4.7mm
- RoHS Compliant

Products Contents (WIZ610wi-EVB)

	WIZ610WI Module
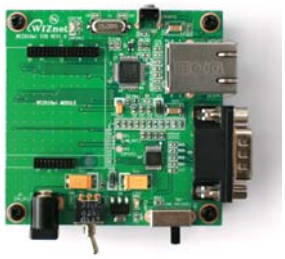	WIZ610wi Evaluation Board
	Serial Cable (Connect Serial Device to Test Board)
	Network Cable (Crossover Cable)
	Power (DC 5V 2A Adaptor)

	Antenna (2dBi PCB type + Coaxial Cable)
	CD (Manual, H/W & SW related Materials)

Table 1. Products Contents.

1.1 Product Specification

1.1.1 WIZ610wi Module

Wireless

ITEM	Specification
Wireless Standard	IEEE802.11b/g
Frequency Range	2.412~2.485GHz
Output Power (Tolerance(+/-1dBm)	802.11b: 16dBm@11Mbps 802.11g: 14dBm@6~54Mbps
Receive Sensitivity	802.11b: -65dBm@11Mbps 802.11g: -76dBm@54Mbps
Data Rates	54Mbps-1Mbps
Modulation Type	11g: OFDM(64QAM, 16QAM, QPSK, BPSK) 11b: DSS(CCK, DQPSK, DBPSK)

Table 2. Products Specification - Wireless

Hardware

ITEM	Specification
Interface	MII, UART, Power, 1.27mm Pitch Header Pin
	U.FL(wireless)

Temperature	Operation: -30℃~70℃ (Refer to the 7. Aging test report) Storage: -40℃~115℃
Humidity	Operation: 10% to 90%, Non-Condensing Storage: 5% to 90%, Non-Condensing
Serial	Baud Rate : Max 921,600bps
	Stop bits: 1
	Parity: None, Odd, Even
	Flow Control: XON/XOFF(software), CTS/RTS(hardware), none
Power	3.3V
Power Consumption	Under 480mA(3.3V)
Dimension	39mm X 32mm X 4.7mm Ø 3mm hole X 1
Weight	8.0g

Table 3. Products Specification - Hardware

Software

ITEM	Description
Operation Mode	Access Point, Client, Gateway, Serial to Wireless LAN
Protocol	ARP, UDP, TCP, Telnet, ICMP, IGMP, DHCP, PPPoE, BOOTP, HTTP, TFTP
Security	WEP 64/128big WPA/WPA2 PSK/AES/TKIP 802.1x(Radius) SSL
Management	HTTP, Telnet, Serial, UDP
Notification	Event Logging

Table 4. Products Specification - Software

1.1.2 WIZ610wi Test Board

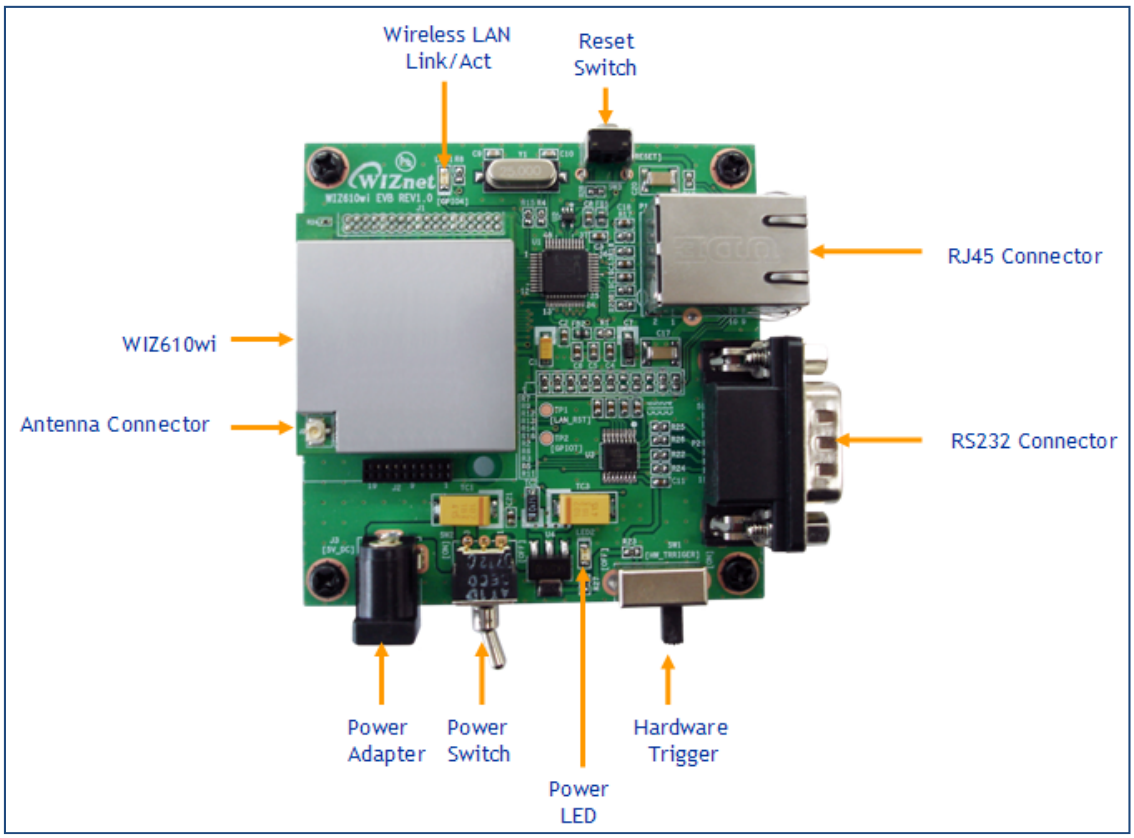

Figure 1. WIZ610wi Test Board

2. Getting Started

This manual describes all configurations in detail. For the quick and easy installation, please refer to "WIZ610wi Quick Installation Guide"

2.1. Hardware Installation

For the testing, module and test board should be prepared.

- **STEP1**: Insert WIZ610wi module in the socket of test board.
- **STEP2:** Connect the test board to the HUB or PC by using a network cable.
- **STEP3:** Connect the test board to the serial device by using the RS-232 serial cable.
- **STEP4:** Insert the power supply connector to the test board by using the 5V DC power adaptor.

2.2. Configuration

2.2.1 Wizard Program

Execute Wizard Program. You can download the Wizard Program from WIZnet webstie.



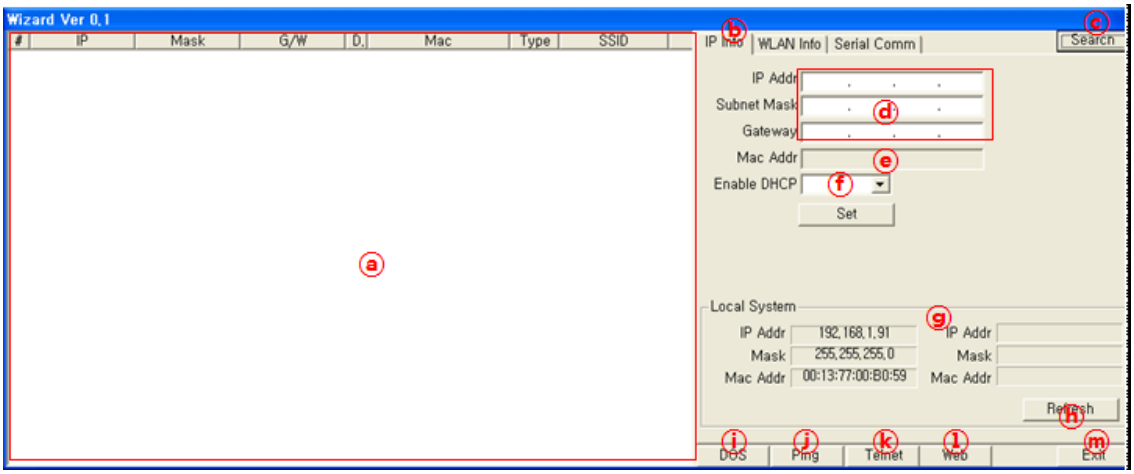

Figure 2. WIZ610wi Wizard Program

ⓐ: If you click ⓒSearch button, details about WIZ610wi on the same network will be displayed. You can check IP address, Subnet Mask, Gateway, DHCP, MAC Address, Standard Type (802.11b or g) and SSID.

ⓑ IP Info: If you select a WIZ610wi, the IP address information is displayed.

ⓓ You can check or modify the IP address, Subnet Mask and Gateway of a WIZ610wi module.

ⓔ MAC Addr: It displays the MAC Address of a WIZ610wi.

ⓕ Enable DHCP: You can enable or disable DHCP Server function.

After configuring ⓓ and ⓕ, click Set button for completing the configuration.

ⓖ Local System: It displays IP and MAC addresses of the PC where Wizard Program is installed.

ⓗ Refresh: After changing IP address of the PC, click Refresh button to display the updated information.

ⓘ DOS: It opens Command Prompt window.

ⓙ Ping: It sends Ping command to the selected WIZ610wi.

ⓚ Telnet: If you click Telnet Button, the window for telnet connection is shown. The default

login ID and password are admin.

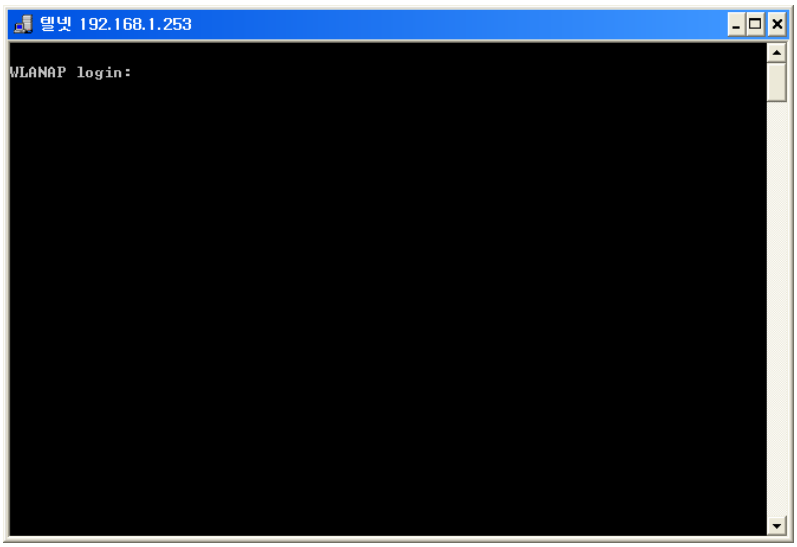

Figure 3. WIZ610wi Telnet Window

① WEB: If you click WEB button, the web configuration window will be shown. For the detail about web configuration, refer to 2.2.2 Connecting the webpage of WIZ610wi.

ⓜ EXIT: Wizard Program will be closed.

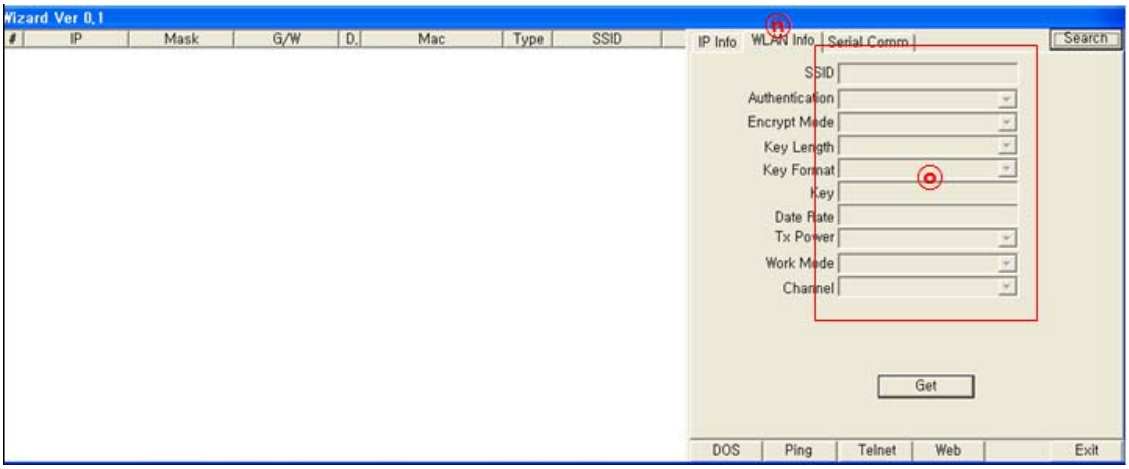

Figure 4. WIZ610wi Wizard Program

ⓝ: Select a WIZ610wi on the left window and click Get button. The wireless LAN configuration detail of the selected module will be displayed after 4 seconds. You can check the detail of SSID, Authentication, Encryption Mode, Key length, Key Format, Key Value, Data Rate, Tx Power, Work Mode, Channel and etc. You can't change the configuration.

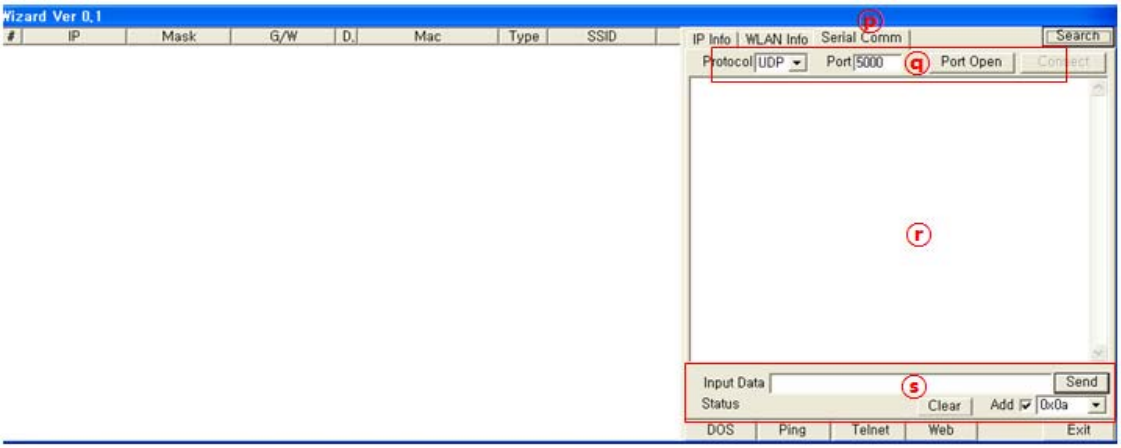

Figure 5. WIZ610wi Wizard Program

ⓟ Serial Comm: You can test the function of “Serial to Wireless”. After connecting PC and WIZ610wi using serial cable, execute serial terminal program.

ⓠ Select protocol type – UDP or TCP, and input port number. Port Open button is enabled at the UDP mode, and Connect button is enabled at the TCP mode.

ⓡ Transferring data are displayed.

ⓢ Input data to be transmitted, and click Send button.

2.2.2 Connecting the Web page of WIZ610wi

1) Open a web browser on your PC and input "192.168.1.254", the default IP address of WIZ610wi.

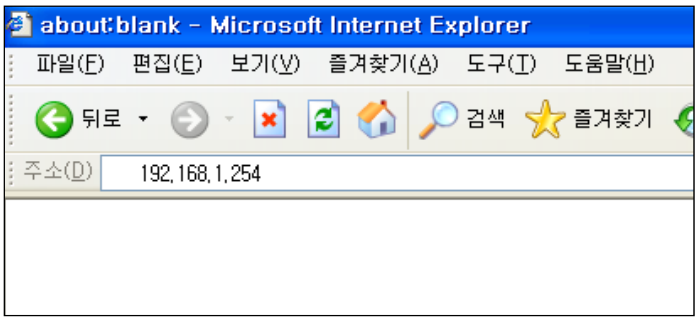

Figure 6. Connecting to the Web page of WIZ610wi

Notice : Configure the network parameters of WIZ610wi and your PC.

- The default IP address of WIZ610wi is "192.168.1.254". Your PC's IP address should start with these three sets of numbers "192.168.1.XXX".
- WIZ610wi and PC can be connected through wireless network. Connect to WIZ610wi from PC by using default SSID "WLANAP"

---

2) A pop up will request you to input your User ID and Password.

Default User ID : admin Password : admin

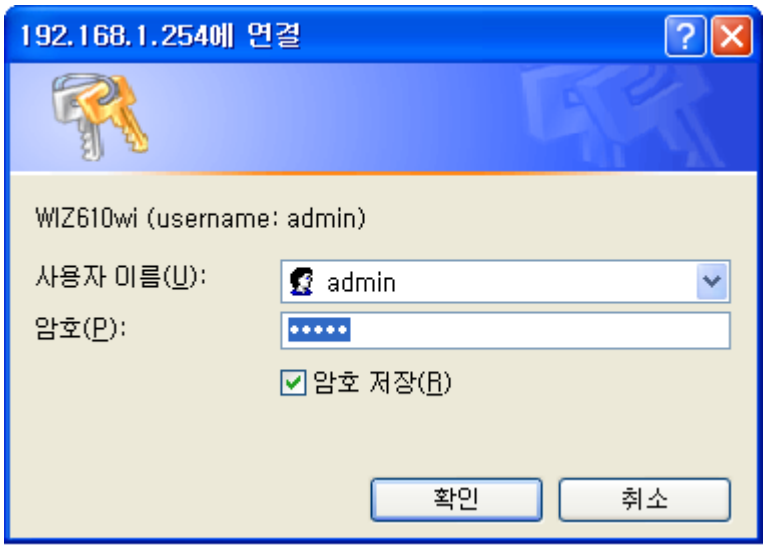

Figure 7. Input ID & Password

2.2.3 Checking Status

1) System Data



Figure 8. System Data

ITEM	Description
Firmware Version	The firmware version of WIZ610wi is displayed
Firmware Date	The last date and time of firmware upgrade
MAC Address(LAN)	the MAC Address of WIZ610wi for Ethernet communication.
IP Address	the IP address of WIZ610wi.

Network Mask	the Network Mask of WIZ610wi.
Default Gateway	the Gateway of WIZ610wi.
DHCP Server	shows the DHCP server function is activated or not.
DHCP Start IP Address	shows the first IP address to be assigned from DHCP server.
DHCP Finished IP Address	shows the last IP address to be assigned from DHCP server.
MAC Address(WLAN)	the MAC Address for wireless communication.
SSID	the SSID of WIZ610wi.
Channel	the wireless channel of WIZ610wi.

Table 5. System Data

Notice : WIZ610wi supports the MAC addresses for both Ethernet and Wireless interfaces.

2) Active Client



Figure 9. Active Clients

In this page, the information of clients connecting to WIZ610wi is displayed. If you click "Refresh" button, the client list and information are updated.

2.2.4 Network Setting

You can configure network parameters of WIZ610wi.

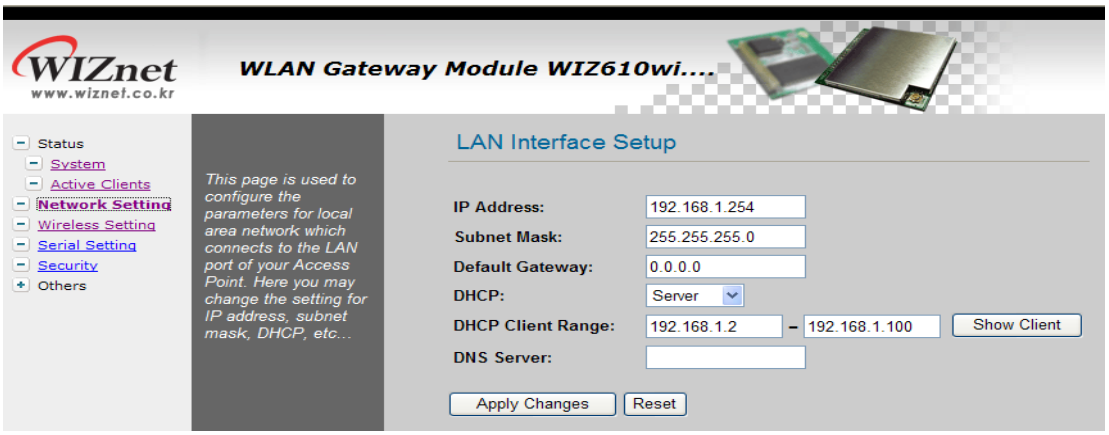

Figure 10. Network Setting

- **IP Address**: The default IP Address is set as "192.168.1.254".
- **Subnet Mask**: The default Subnet Mask is set as "255.255.255.0".
- **Default Gateway**: The default Gateway is set as "0.0.0.0".
- **DHCP**: If you want to activate the DHCP Server function, select the "Server". If not, select "Disable".

Notice: When the WIZ610wi's IP address is managed by another DHCP server in the upper layer, the DHCP function in your wireless module will be disabled. All your clients connecting to your WIZ610wi can not recognize your module as a DHCP server.

- **DHCP Client Range**: When WIZ610wi operates as the DHCP Server, the IP address range must be

assigned in order for the clients to connect. If the DHCP server function is disabled, this DHCP Client

Range is not activated.

- **Show Client :** If you click the "Show Client" button, a window is popped up to show a list of clients.

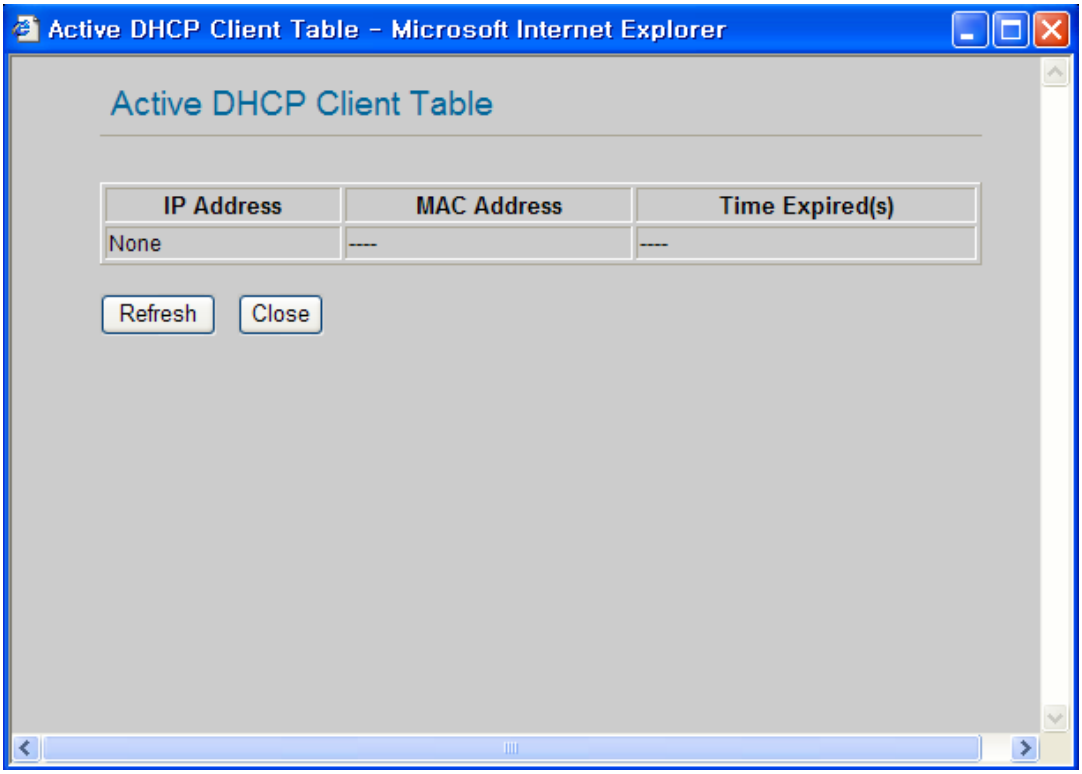

Figure 11. Active DHCP Client Table

- **Apply Changes** : By clicking this button, the modified values are applied. After changing, the page is refreshed to re-connected to the new IP address.

2.2.5. Wireless Setting

2.2.5.1. Mode Selection

You can select one of Access Point, Gateway and Client for the wireless connection mode.

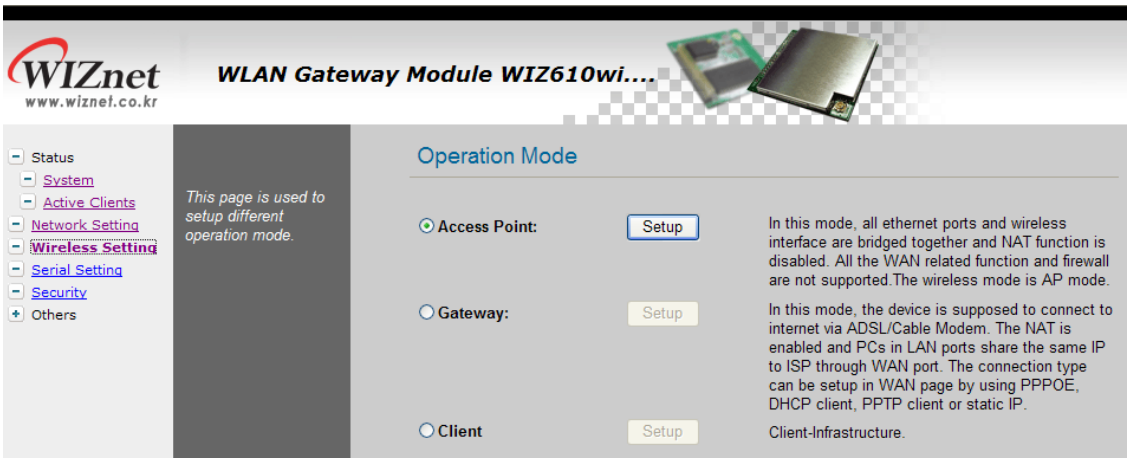

Figure 12. Operation Mode

Access Point is the default mode. If you select Gateway or Client and click the "Setup" button, the progress bar will be shown.

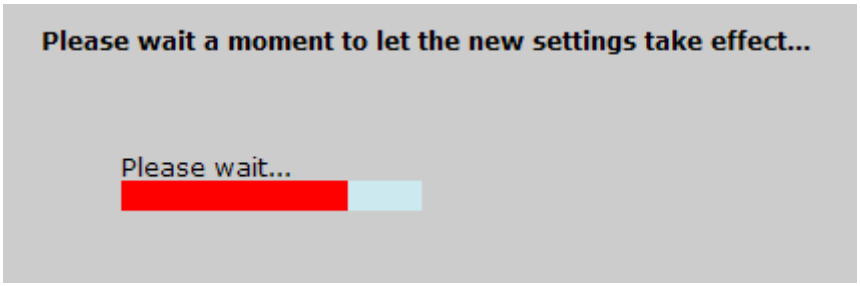

Figure 13. Changing Operation Mode

1) Access Point Mode

In this mode, all Ethernet ports and wireless interface are bridged together and NAT function is disabled. All the WAN related function and firewall are not supported.

2) Gateway Mode

In this mode, your device can connect to the internet via ADSL/Cable Modem. The NAT is enabled and PCs in LAN ports share the same IP to ISP through WAN port. WAN connection type can be setup in WAN page by using PPPOE, DHCP client, PPTP client or static IP.

3) Client Mode

In this mode, your device act as a client. If you configure PC or application device as DHCP client, Access Point will be the DCHP Server and WIZ610wi doesn't act as DHCP Server.

2.2.5.2. IP Configuration in Each Mode

1) Access Point Mode

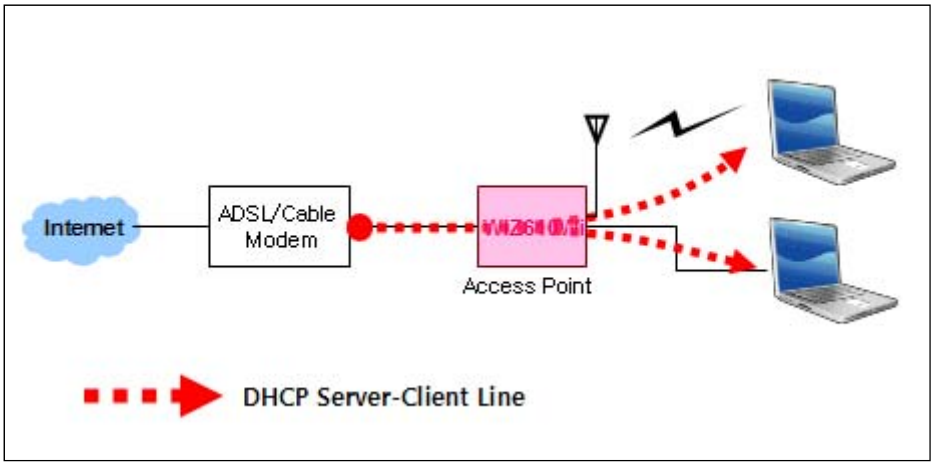

Figure 14. Access Point Mode - 1

- The IP address assigned to WIZ610wi is for administration and web configuration.
- Even though the WIZ610wi is configured as DHCP Server, the PC will acquire IP address from IP Sharing device or ADSL/Cable Modem.

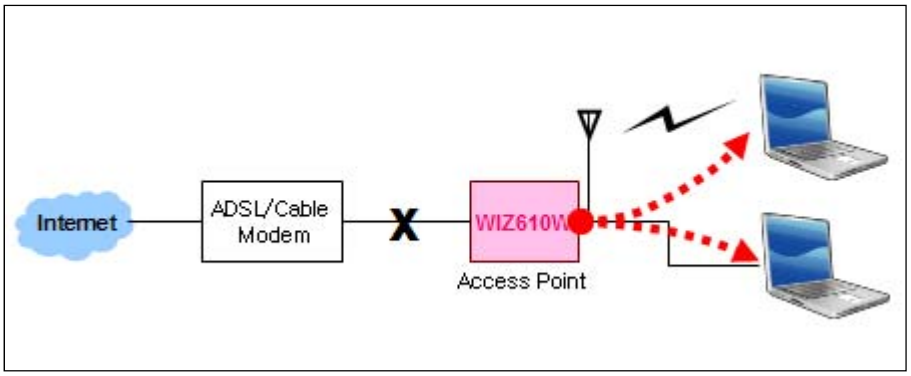

Figure 15. Access Point Mode -2

- If there is not IP Sharing Device or ADSL/Cable modem, WIZ610wi will assign the IP addresses which is in DHCP IP range to PCs through wired or wireless network.

2) Gateway Mode

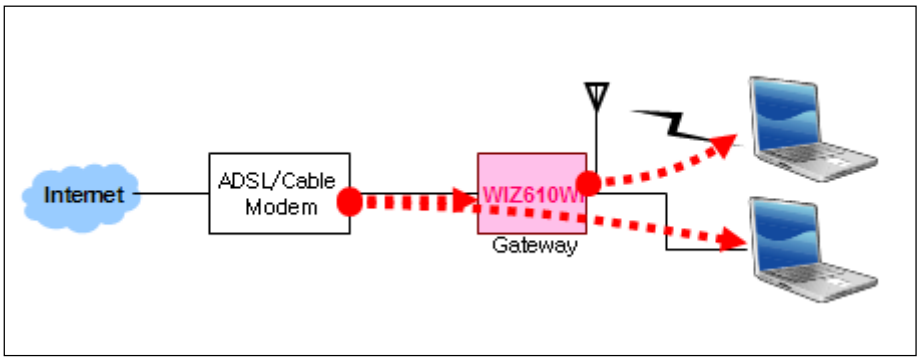

Figure 16. Gateway Mode

WIZ610wi operates as DHCP Server for the wireless communication.
WIZ610wi operates as Static/DHCP/Client/PPPoE for the wired (Ethernet) communication.

3) Client Mode

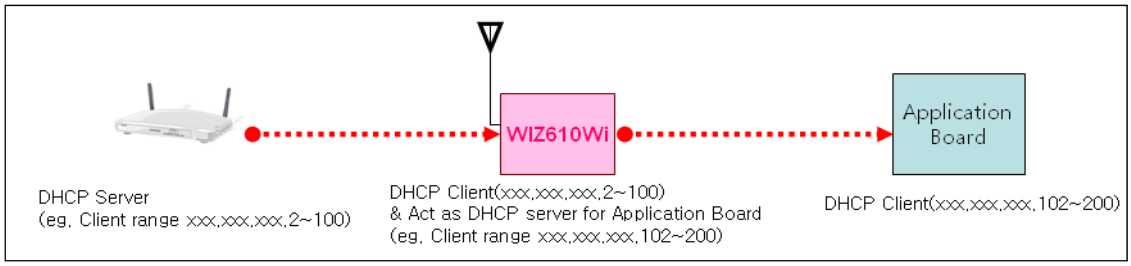

Figure 17. Client Mode

WIZ610wi can be set IP as Static or DHCP client at 'Client Setup>WAN Port Setup'. And also WIZ610wi can be act DHCP Server simultaneously by assigning adding 100 of first DHCP server. For example, if DHCP server's client range is XXX.XXX.XXX.2~100, then WIZ610wi's assigning DHCP Client IP address to application board is XXX.XXX.XXX.102~200.

2.2.5.3. Access Point Setup

After selecting the AP mode and please click "Setup" button, the page below is shown.

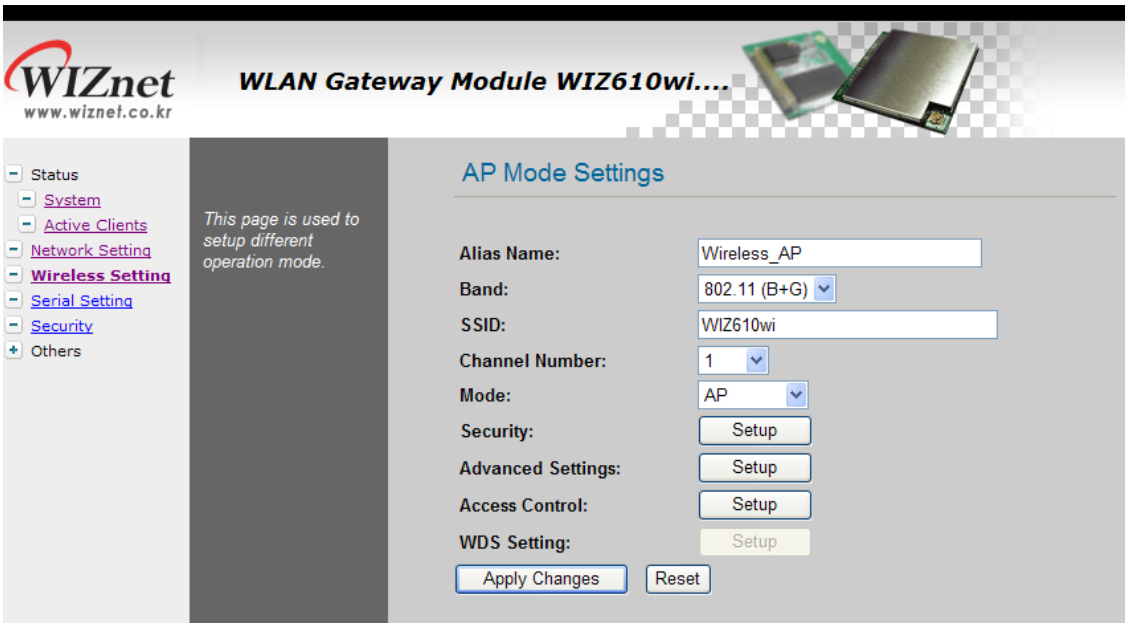

Figure 18. AP Mode Settings

- **Alias Name** : Input the name for WIZ610wi.
- **Band** : Select communication protocol of WIZ610wi.

802.11g protocol is compatible with 802.11b.

- **SSID**: Input SSID for wireless communication.

All devices on the same wireless network should have same SSID. The SSID can have max 32bytes characters composed of alphabets and numbers.

Notice: this field is case-sensitive

Channel Number: **:** Select the channel frequency which you will use for wireless communication.

Auto: If you select Auto, the connection is automatically processed to the channel assigned by AP. When AP is booted, it investigates wireless channel environment and selects the lowest using channel.

Manually Select a Channel : You can select a channel in the range of 1~13..

- **Mode :**

AP : IF AP is selected, WIZ610wi operates as Access Point.

WDS Repeater : WDS(Wireless Distribution System) that can be used for the

communication between WIZ610wi and WIZ610wi. When this mode is selected, AP function operates at the same time.

- **Security :** Configure the security options for WIZ610wi. When you click "Setup" button, below page appears.

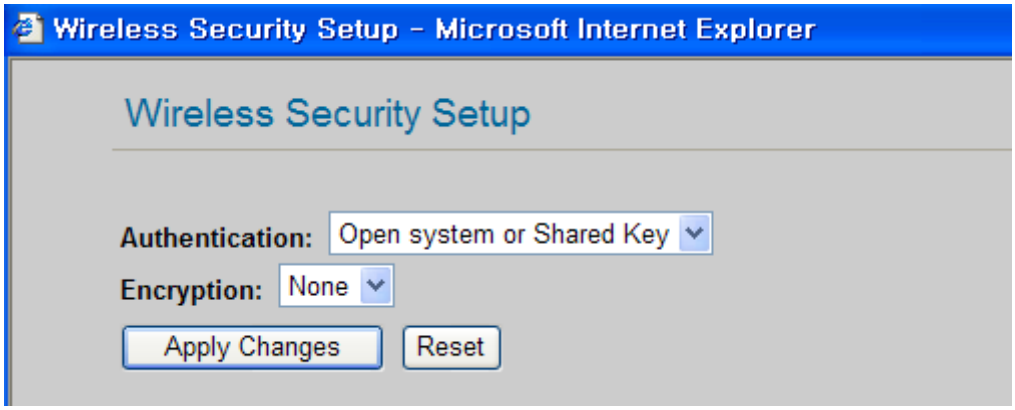

Figure 19. Wireless Security Setup

Authentication : You can select an authentication method for the clients to connect to AP.

Field	Description
Open System or Shared Key	No authentication is imposed to the WIZ610wi. When enabling WEP, the configuration is activated.
Open System with 802.1x	The client authentication is performed by RADIUS server. Configure the port number, IP address and Password of RADIS server.
Shared Key	WEB function is activated. Input the Key value.
WPA RADIUS	WPA: Wi-Fi Protected Access WPA is based on TKIP(Temporal Key Integrity Protocol) IEEE802.11i standard which complements WEP(Wired Equivalent Privacy). WPA is the upgraded authentication methods by applying 802.1x and EAP (Extensible Authentication Protocol).
WPA PSK	WPA Pre-Shared-Key is the authentication method using Pre-Shared Key. Configure PSK format and input value for PSK.
WPA2 RADIUS	WPA2 is using AES(Advanced Encryption Shared) algorithm. AES is more strengthened encryption method rather than RC4 which is used for WEP or WPA. WPA2 RADIUS performs AES encryption and RADIUS server authentication. If WIZ610wi uses WPA2, it can be compatible with devices using WPA1.

WPA2 PSK	WPA2-PSK uses Advanced Encryption Standard(AES) for encryption Keys together with WPA PSK method.

Table 6. Authentication Method

Encryption : It configures authentication mode for security of wireless network. There are options of WEP and None. If WEP is selected, the below items are activated for configuration.

ITEM	Description
key Length	Configure the length of WEP Key. Option : 64 or 128bit
Key Format	Configure the format of WEP Key. Option : ASCII(5 Characters) or Hex(10 Character)
Default Tx Key	Max 4 Tx Key values can be configured. Select one of them.
Encryption Key 1~4	Input the key value.

Table 7. WEP Configuration

- Advanced Settings : If you click the "Setup" button, below page is appeared.

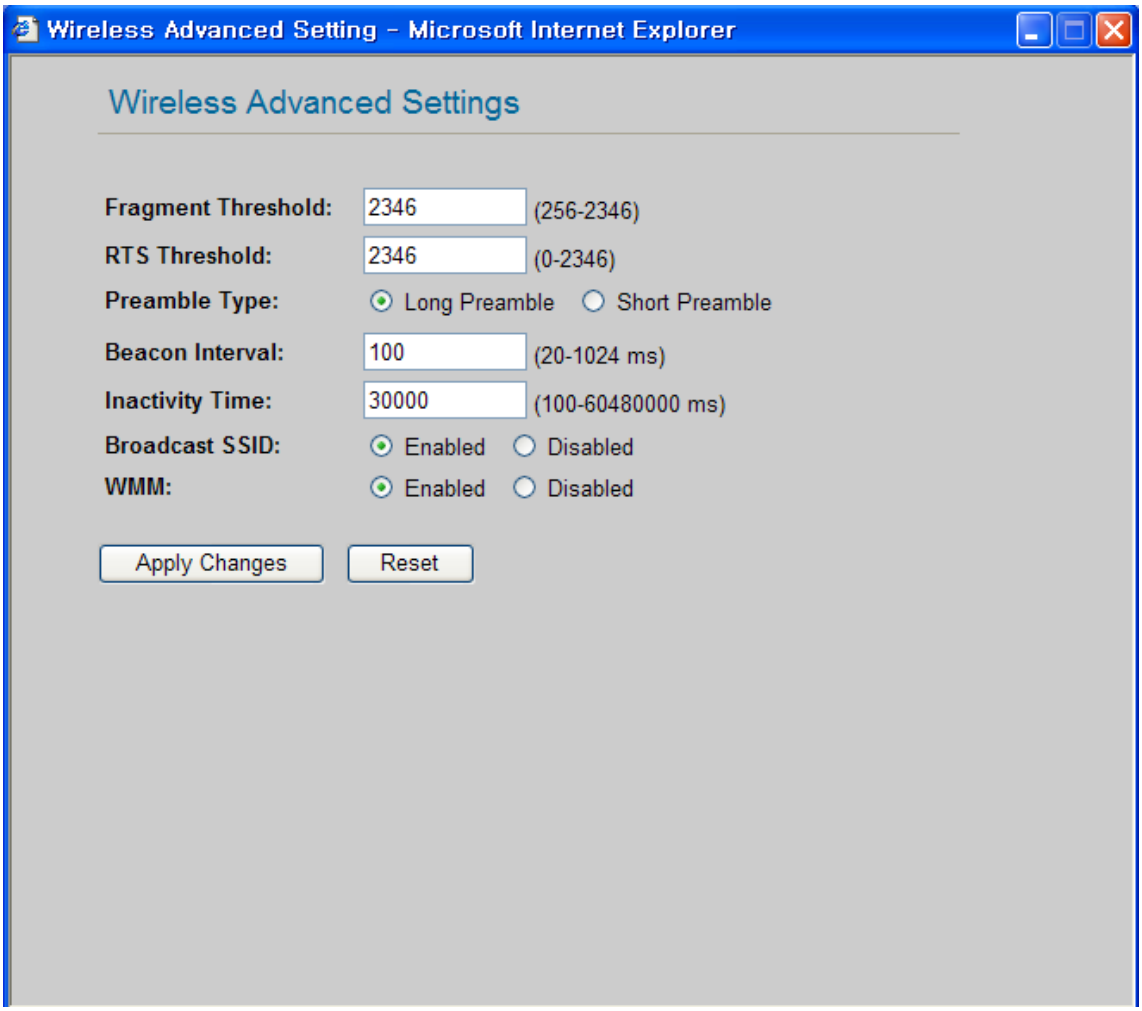

Figure 20. Wireless Advanced Settings

Field	Description
Fragment Threshold	This value specifies the maximum size for a packet before data is fragmented into multiple packets. If you experience a high packet error rate, you may slightly increase the Fragmentation Threshold. Setting the Fragmentation Threshold too low may result in poor network performance. Only minor reduction of the default value is recommended. In most cases, it should remain as its default value of **2346**.
RTS Threshold	When you encounter inconsistent data flow, only minor reduction of the default value, **2347**, is recommended. If a network packet is smaller than the preset RTS threshold size, the RTS/CTS mechanism

	will not be enabled. The Router sends Request to Send (RTS) frames to a particular receiving station and negotiates the sending of a data frame. After receiving an RTS, the wireless station responds with a Clear to Send (CTS) frame to acknowledge the right to begin transmission. The RTS Threshold value should remain as its default value of **2347**.
Preamble Type	
Beacon Interval	The default value is **100**. Enter a value between 1 and 65,535 milliseconds. The Beacon Interval value indicates the frequency interval of the beacon. A beacon is a packet broadcast by the Router to synchronize the wireless network.

Table 8. Wireless Advanced Settings

• **Access Control :** By registering the MAC address of a client, WIZ610wi blocks or allows the client to access. If you click the "Setup" button, page below appears.

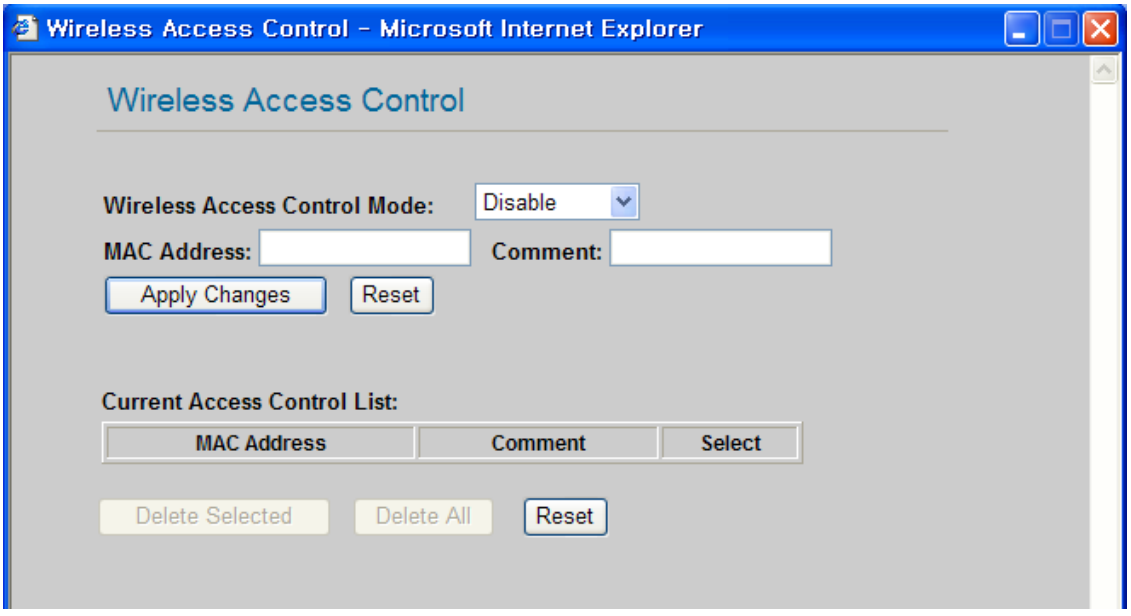

Figure 21. Wireless Access Control

Wireless Access Control Mode : This option allows you to enable or disable the "Wireless Access Control Mode". (Options: Disable / Allow Listed / Deny Listed)

Disable: Not use "Wireless Access Control Mode".

Allow Listed: clients with their MAC registered in the Control List are permitted to access WIZ610wi

Deny Listed: clients with their MAC registered in the Control List are denied to access

• **WDS Setting :** If AP mode is set as WDS Repeater, WDS Setting button is activated. WDS is Wireless Distribution System that is working as a wireless bridge between AP and AP. If you click the "Setup" button, the page below appears.

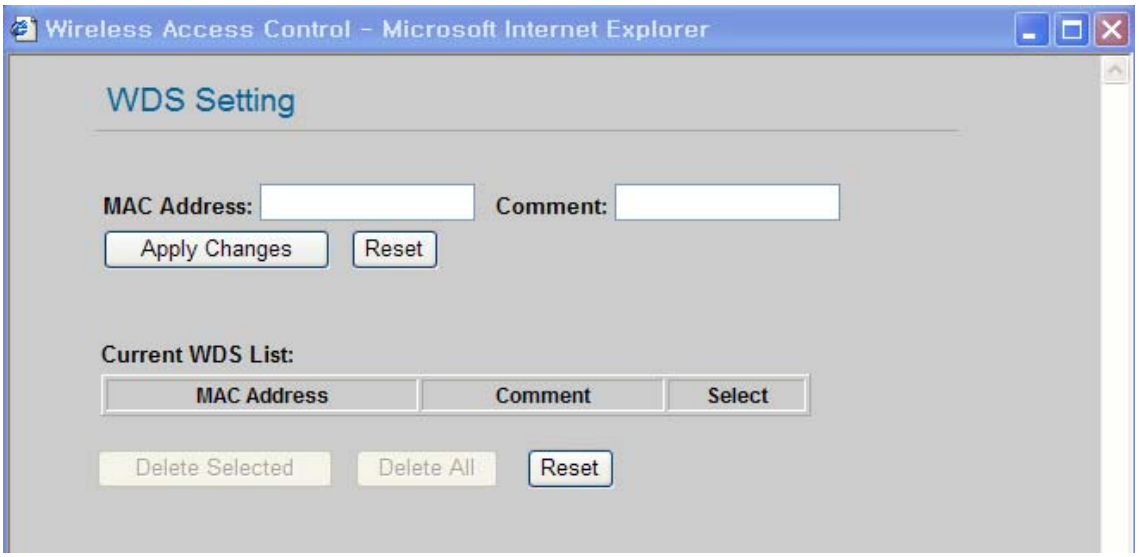

Figure 22. WDS Setting

Input wireless MAC address of the device to be connected.

Apply Changes : Add the MAC address into the WDS list

Reset : Discard all changes in all fields

2.2.5.4. Gateway Setup

<Notice>

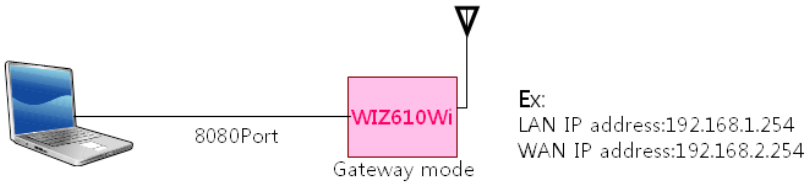

When changed to Gateway mode, wired network is disconnected, It because WIZ610wi's wire port act as WAN Port. So to solve this problem..

1. Connect WIZ610wi through wireless
2. Check WAN IP of Gateway mode setup page
3. Connect 'http://WAN_IPaddress:8080 (8080 port)

First time it must be input '8080', but next time no need to add '8080'

Gateway mode can be used when you want to connect to the Internet through an ADSL/Cable Modem, or IP Sharing Device. By clicking the "Setup" button, you can configure your PPPoE, DHCP Client, PPTP or Static IP settings

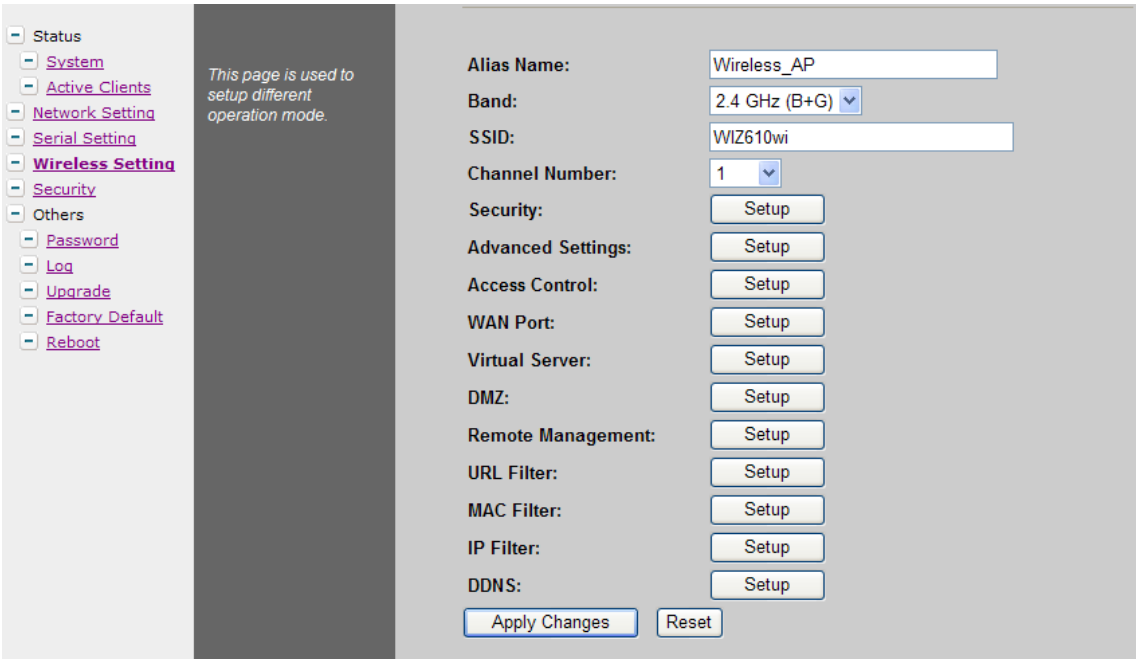

Figure 23. Gateway Setup

- **Alias Name**: Refer to "2.2.4.3 Access Point Setup".
- **Band**: Refer to "2.2.4.3 Access Point Setup".

- **SSID**: Refer to "2.2.4.3 Access Point Setup".
- **Channel Numbe**r: Refer to "2.2.4.3 Access Point Setup".
- **Security:** Refer to "2.2.4.3 Access Point Setup".
- **Advanced Settings**: Refer to "2.2.4.3 Access Point Setup".
- **Access Control**: Refer to "2.2.4.3 Access Point Setup".
- **WAN Port** : If configures WAN port. It configures the network environment for the connection to WIZ610wi.

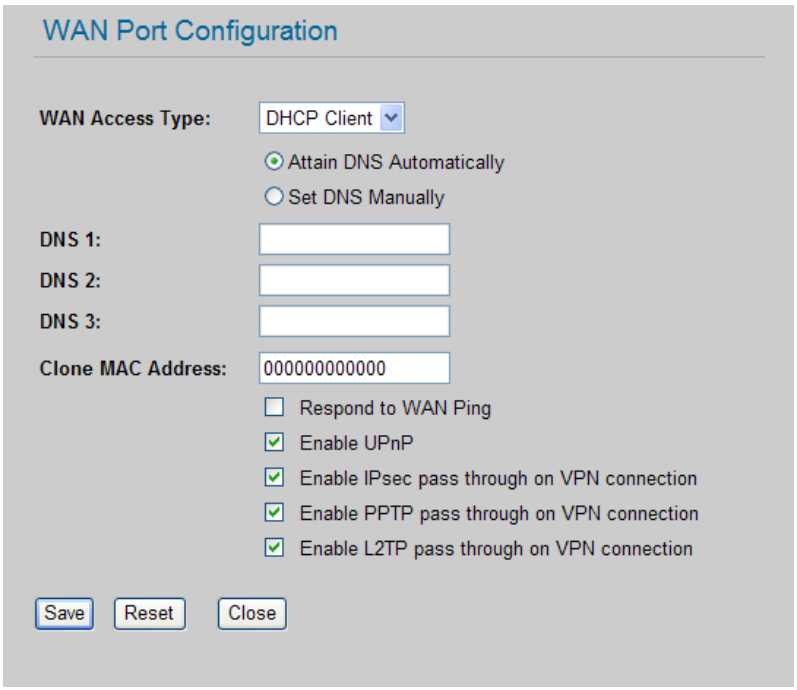

Figure 24. WAN Port Configuration

✓ **WAN Access Type**

➢ **Static IP :** Manually input your IP address, Subnet Mask, Default Gateway and DNS.

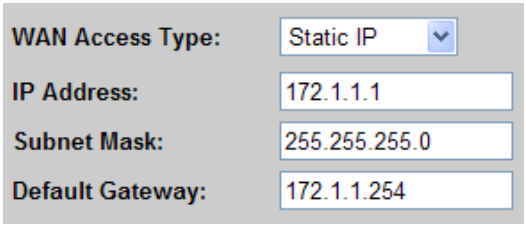

Figure 25. WAN Access Type – Static IP

➢ **DHCP Client :** An IP address can be acquired from a DHCP server. The

DNS information can be automatically acquired from a DHCP server or set manually (Set DNS Manually).

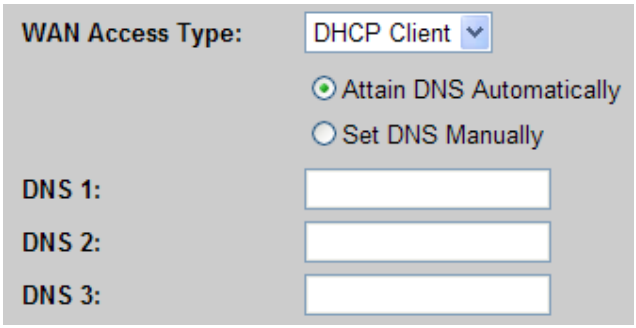

Figure 26. WAN Access Type – DHCP Client

✓ **PPTP**

- **Virtual Server:** Virtual Server also known as Port Forwarding associates a port number with a private IP address(internal network). This technique allows clients from outside a network to access devices within the LAN (internal network).
- **DMZ:** This feature allows one network user to be exposed to the Internet for special-purposes such as Internet gaming or videoconferencing. DMZ hosting forwards all the ports at the same time to one PC. The Port Range Forward enhances the security of your device because only a range of ports are opened for access. DHCP should be disabled in order to avoid any changes in your IP address. Static IP address is recommended when using the DMZ
- **Remote Management** : Configure the port number for the connection to WIZ610wi from a remote site. Default Port Number is set as "8080".
- **URL Filter:** It enables to connect or disconnect to the specified URL.
- **MAC Filter:** Prevent access from a device with a specific MAC address
- **IP Filter:** Prevent acess from a device with a specific IP address
- **DDNS(**Dynamic DNS) **:** Once the DDNS server registers yours MAC address, your device can connect to the internet regardless of your address. DDNS service can be provided by www.no-ip.com. (You need to pay some fee). After registering some information at www.no-ip.com, input your E-mail address and password in the figure shown below. When you click the "Update" button, the status will change from"Not Connected" to "Connected"

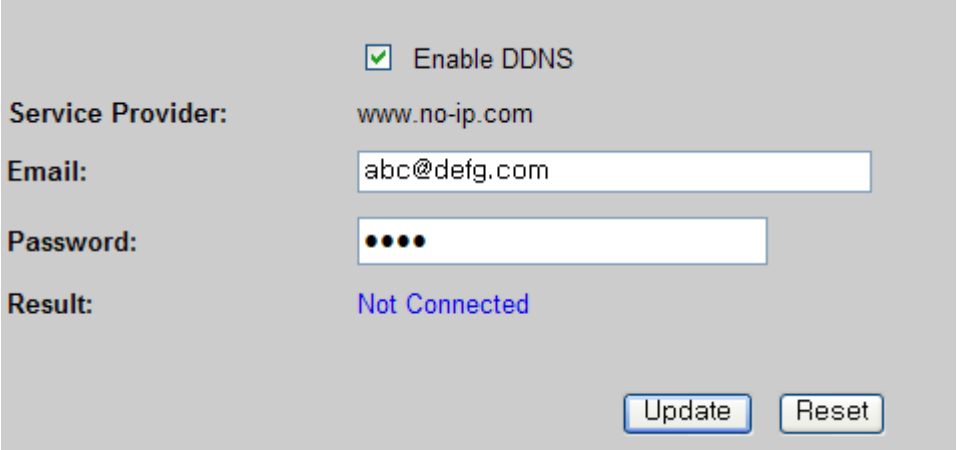

Figure 27. WAN Access Type - DDNS

2.2.5.5. Client Setup

In client mode, WIZ610wi connects to an access point.

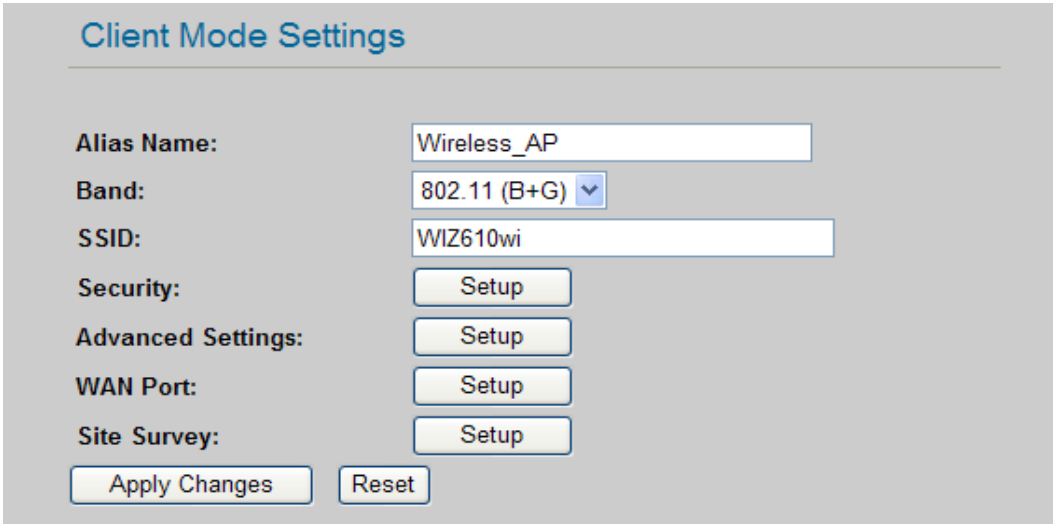

Figure 28. Client Setup

- **Alias Name**: Input the name for WIZ610wi.
- **Band**: Select a communication protocol for your module. It supports 802.11b, 802.11g and 802.11b/g mode.
- **SSID**: Input the SSID of an access point. If you don't know your SSID, you can use the "Site Survey" to search and connect to an AP.
- **Security:** Configure security settings (these should match your AP's settings)
- **Advanced Settings**: Refer to "2.2.4.3 Access Point Setup".
- **Site Survey:** If you click the "Site Survey' button, all access points near your module are listed as shown in the figure below. Please select one AP and click "Connect"

button. If PC or application device is set as DHCP Client, the AP will operates as its DHCP server and WIZ610wi doesn't act as DHCP Server. When you connect to an AP with security enabled ,the "Wireless Security Setup Page" will appear automatically to set-up your security settings. By using the "Site Survey", Band, SSID and Security can be configured all at the same time.

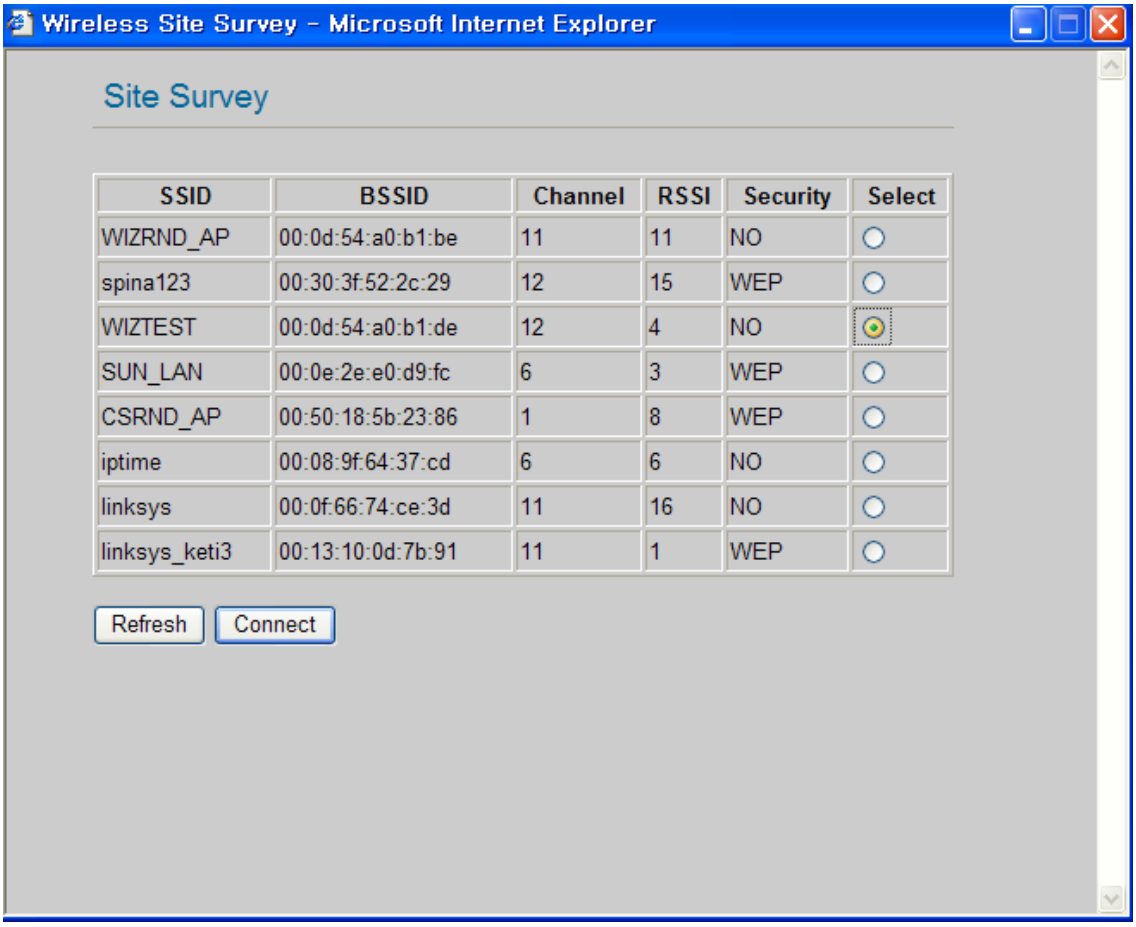

Figure 29. Site Survey

2.2.6. Serial Setting

For the 'Serial to Wireless' communication, you can configure serial parameters.

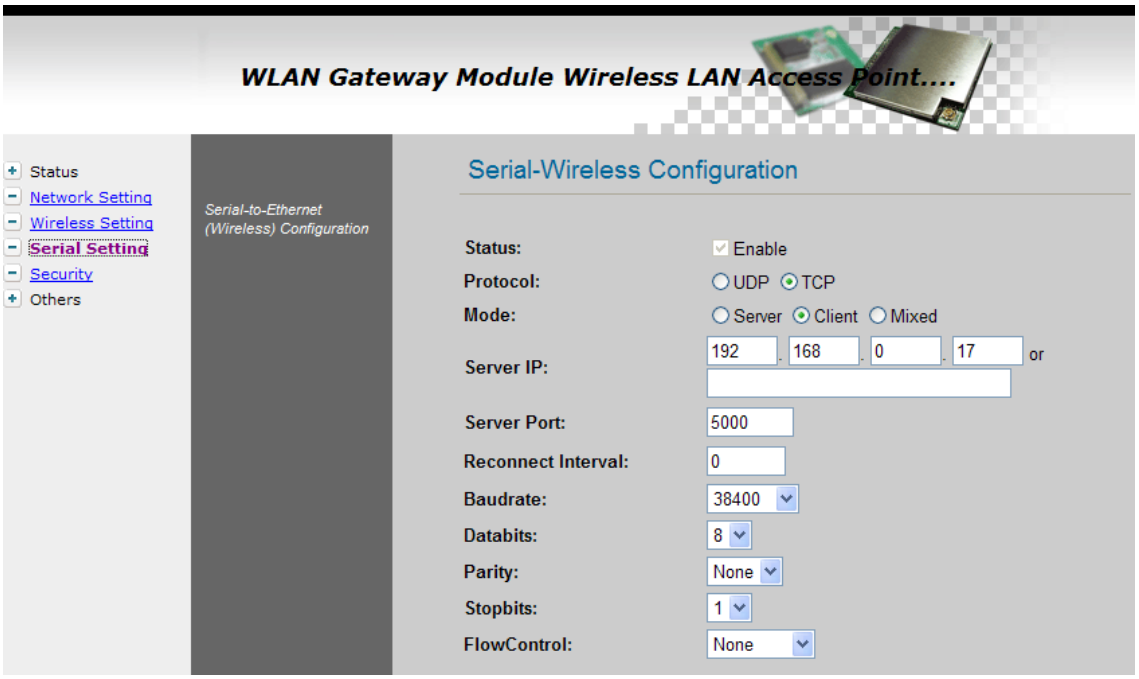

Figure 30. Serial to Ethernet Configuration

- **Status:** Check this combo box to enable serial communication
- **Protocol:** Select UDP or TCP

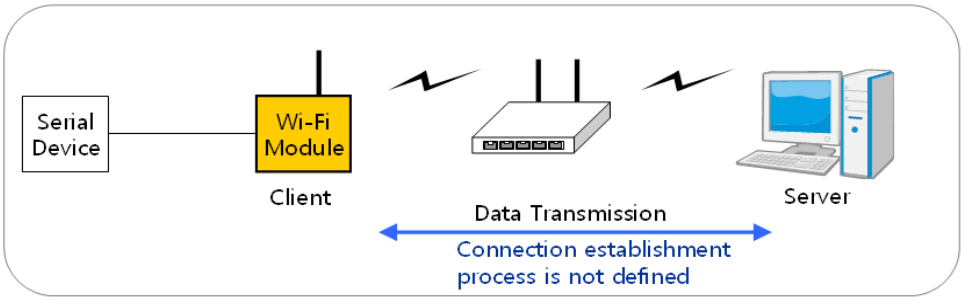

- **Mode:** Select one mode among Server, Client and Mixed.

This mode is to select the communication method based on TCP. TCP is the protocol which establishes the connection before data communication. In server mode, WIZ610wi waits for the connection from a client. In client mode, WIZ610wi operates as client at the TCP Client mode on the process of connection, and tries to connect to the server's IP and Port. Mixed modes supports both of Server and Client at the same time.

Below describes in details regarding each mode

✓ **TCP server mode**

In order to operate this mode, Local IP, Subnet, Gateway Address and Local Port Number should be configured. In monitoring applications, the server mode can be useful since it can listen for any connection from clients, and establish a connection for remote management.

1. A client connects to the WIZ610wi which is in TCP Server mode.
2. As the connection is established, data can be transmitted in both directions – from the host to the WIZ610wi, and from the WIZ610wi to the host

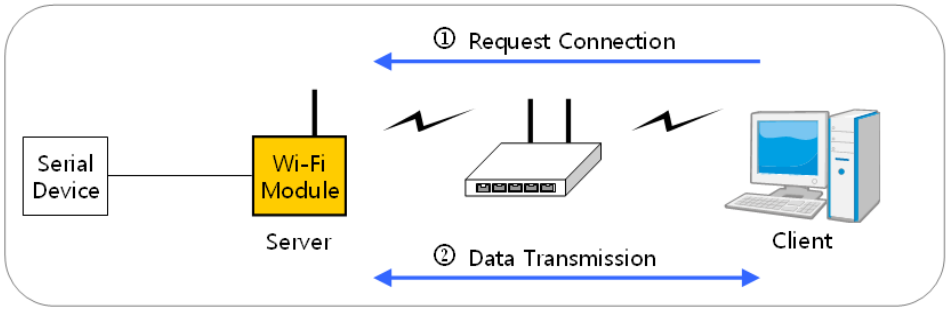

✓ **TCP client mode**

In TCP Client mode, your module will attempt to connect to a specified server.
In order to operate this mode, Local IP, Subnet, Gateway Address, Server IP, and Server port number should be set. If the server IP has a domain name, please use the DNS function.
1. When power is supplied, WIZ610wi board operating as TCP client mode actively establishes a connection to the server.
2. Once the connection is established, data can be transmitted in both directions – from the host to the WIZ610wi and from WIZ610wi to the host

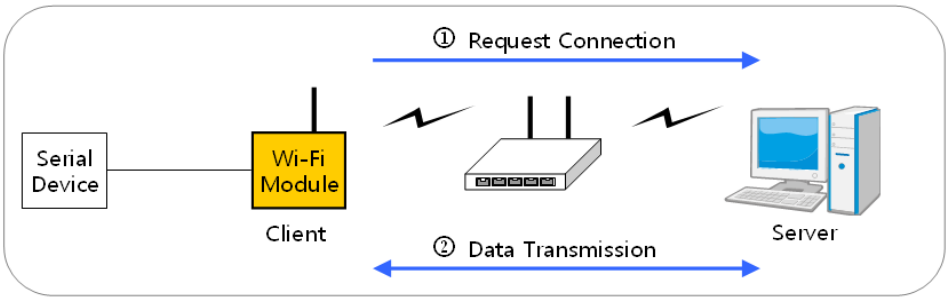

✓ **Mixed mode**

In this mode, WIZ610wi normally operates as a TCP Server and waits for a connection request from a client. However, if WIZ610wi receives data from the serial device before connection is established, WIZ610wi changes to the client mode and sends the data to the server. Therefore, in the mixed mode, the server mode has higher priority than the client mode. Mixed mode takes advantages of both client and server mode. The client mode may be used for sending out emergency reports in an urgent situation while the server mode may be used for remote management.

- **Server IP :** Input server IP or input Domain Name. If both input, priority is IP address.
- **Server Port :** Input server port.
- **-Reconnect Interval:** Set the interval retrying connecting to server.
- **Baudrate:** Configure serial communication speed.
- **Databits:** Configure databits.
- **Parity:** Configure parity checking option. (option: None, Odd, Even)
- **Stopbits:** Configure stop bit option.(Option: 1, 2)
- **FlowControl:** Configure flow control option. (option: none, Xon/Xoff, RTS/CTS)
- **Aux Port Configuration**

You can control serial devices through the serial port of WIZ610wi by using AUX port, while you can keep serial to WiFi data communication port.

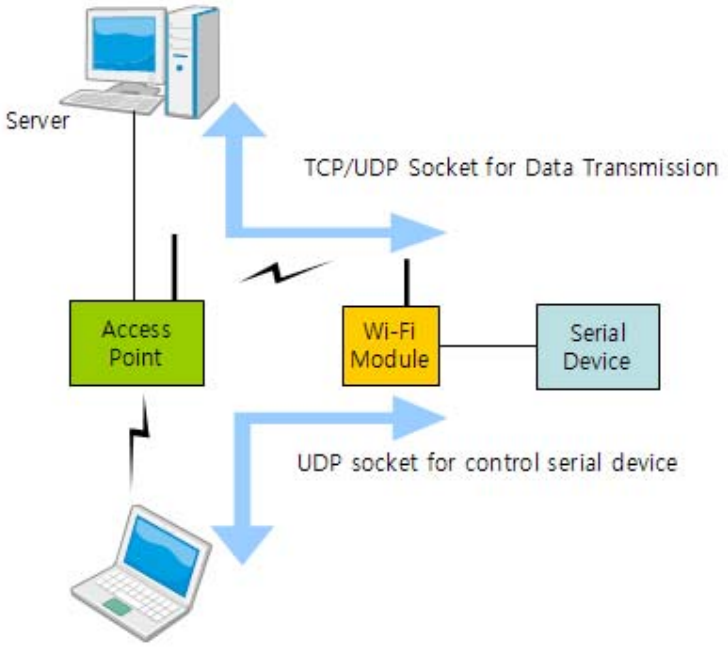

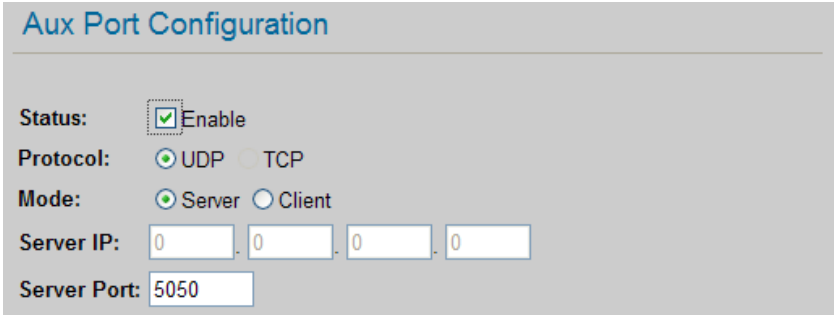

- **Status:** You can enable Aux Port.
- **Protocol :** Aux port can use only UDP protocol.
- **Mode :** You can select server or client mode.
- **Server IP :** If you select the client mode, Server IP is enabled.
- **Server Port:** Input the port number of the server.

- **Data Packing Condition :**

  You can specify how the serial data can be packed to be sent to the Ethernet. There are 3 delimiters -

  time, size and character. If all of them are set as '0', whenever the serial data is arrived, they are sent to the Ethernet immediately.

- Time: This field specifies the waiting time. When there is no more input from the serial port, the module will wait for the specified time and then send out the serial data to the network. For example, if 2000 ms is specified, the module will send out the packet at 2000 ms after the last input from the serial port. If there is no data in the serial buffer, the module will not send out any data packets.

  ('0': Function Disable)

- Size: This field specifies the size limit in the serial buffer. Once the serial buffer reaches this limit, the data will be sent out to the Ethernet. If the serial buffer is greater than the size limit, the module will create an Ethernet packet and store the extra data, and send out to the Ethernet when the limit is reached again.

  ('0': Function Disable)

- Character: Register a character to trigger the conversion of serial data to network packets. Whenever the registered character is inside the serial buffer, all the data before the registered character is sent out to the network excluding the character itself. The character must be in Hexadecimal.

  ('0' : Function Disable)

If any one of these conditions is met, the data will be sent to Ethernet.

Ex) Delimiter: Size=10, Char=0x0D

Serial data : 0123456789abc

Ethernet data : 0123456789

☞ "abc" remains in the serial buffer of the module and will not be sent until the specified size or character has been fulfilled.

- **Save :** Save the configuration values.
- Reset : Discard all changes in all fields

2.2.7. Security Setup

Refer to "2.2.4.3. Access Point Setup'.

2.2.8. Others

2.2.8.1. Password

You can change the password of WIZ610wi



Figure 31. Password Setup

2.2.8.2. Log

The log information can be saved. In order to use this function, check the combo box "Enable Log". The log will include information such as wireless, DDNS, WAN and DHCP.

.

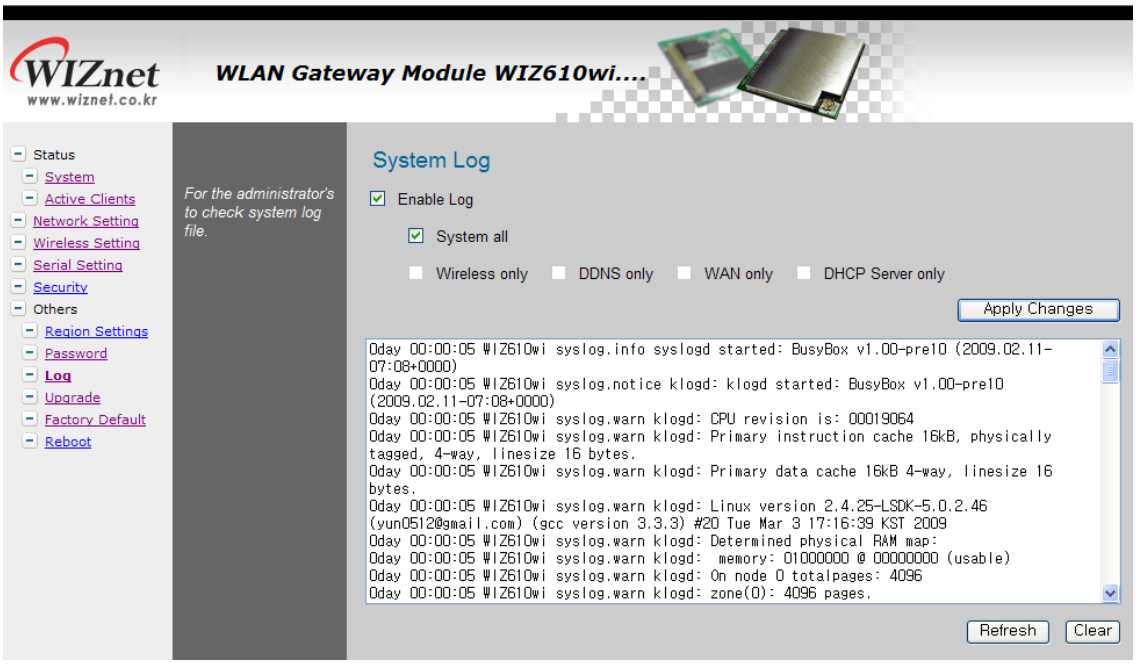

Figure 32. System Log

2.2.8.3. Upgrade

In this page, you can upgrade the firmware of your WIZ610wi.

Browse the firmware file by clicking the "Find" button. If you click "Upload" button after selecting firmware file, the firmware starts uploading. This process will take about 60 seconds.



Figure 33. Upgrade Firmware

2.2.8.4 Factory Default

If you click the "Factory Default" button, all settings value are restored to the factory default setting.

The factory default values are shown below:

Field	Default Value
IP Address	192.168.1.254
Subnet Mask	255.255.255.0
Default Gateway	0.0.0.0
DHCP	Server
DHCP Client Range	192.168.1.2~192.168.1.100
DNS Server	0.0.0.0
Serial Status	Disable
Serial Mode	Server
Server IP	0.0.0.0
Server Port	5000
Baudrate	38400
Databits	8
Parity	None
Flow Control	None
Wireless Mode	AP
Alias Name	Wireless_AP
Band	2.4GHz (B +G)

SSID	WLANAP
Channel	1
AP Mode	AP
Authentication	Open system or Shared Key
Encryption	None
Fragment Threshold	2346
RTS Threshold	2346
Preamble Type	Long Preamble
Beacon Interval	100ms
Inactivity Time	30000ms
Broadcast SSID	Enable
WMM	Enable
Password	Admin
Log	Disable

Table 9. Factory Default Value

2.2.8.5. Reboot

In this page, you can reboot your module.

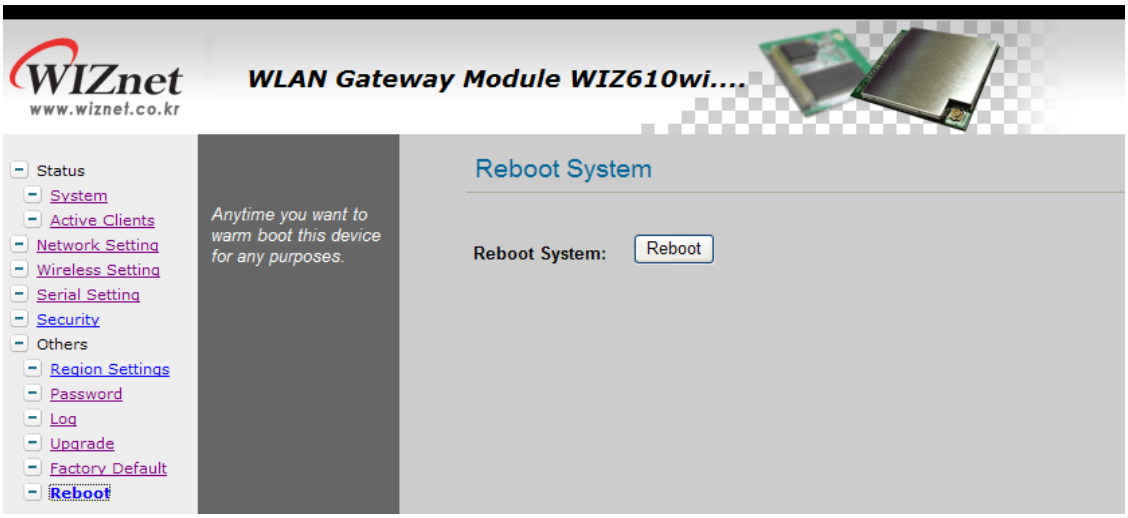

Figure 34. Reboot System

3. Pin Assignment and Module Size

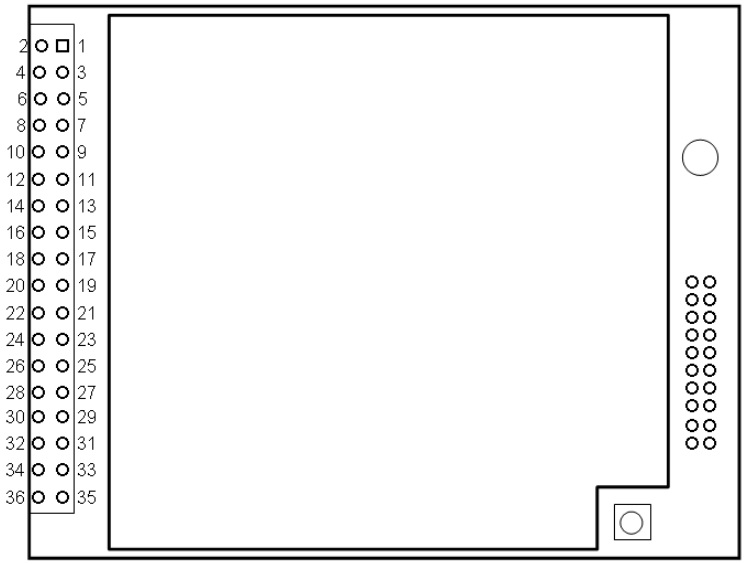

Figure 35. WIZ610WI PIN Map

No	Name	In/Out	Description
1	CTS	I	UART : CTS
2	RTS	O	UART : RTS
3	-	-	-
4	HW_Trigger	I	Low : Entering serial command mode High : Exit serial command mode
5	nRS232_LED	O	Serial RX/TX LED (Active Low)
6			Reserved
7	SOUT	O	UART : TXD
8	SIN	I	UART : RXD
9	DC_IN		3.3V Power
10	DC_IN		3.3V Power
11	GND		GND
12	GND		GND
13	RXERR	I	MII Receive Data Error
14	COL	I	MII collision
15	W_LED	O	Wireless LED (Active Low)
16	MDC	I	SMI Clock

17	RESET	I	Active High If this signal asserted more than 3 sec, factory reset performed.
18	MDIO	I/O	SMI In/Out Data
19	GND		GND
20	GND		GND
21	RXC	I	MII receive clock
22	RXDV	I	MII receive data valid
23	RXD2	I	MII receive data
24	RXD0	I	MII receive data
25	RXD1	I	MII receive data
26	RXD3	I	MII receive data
27	GND		GND
28	GND		GND
29	TXC	I	MII transmit clock
30	TXEN	O	MII transmit enable
31	TXD3	O	MII transmit data
32	TXD2	O	MII transmit data
33	TXD0	O	MII transmit data
34	TXD1	O	MII transmit data
35	GND		GND
36	CRS	I	Carrier sense

Table 10. WIZ610wi Pin Function

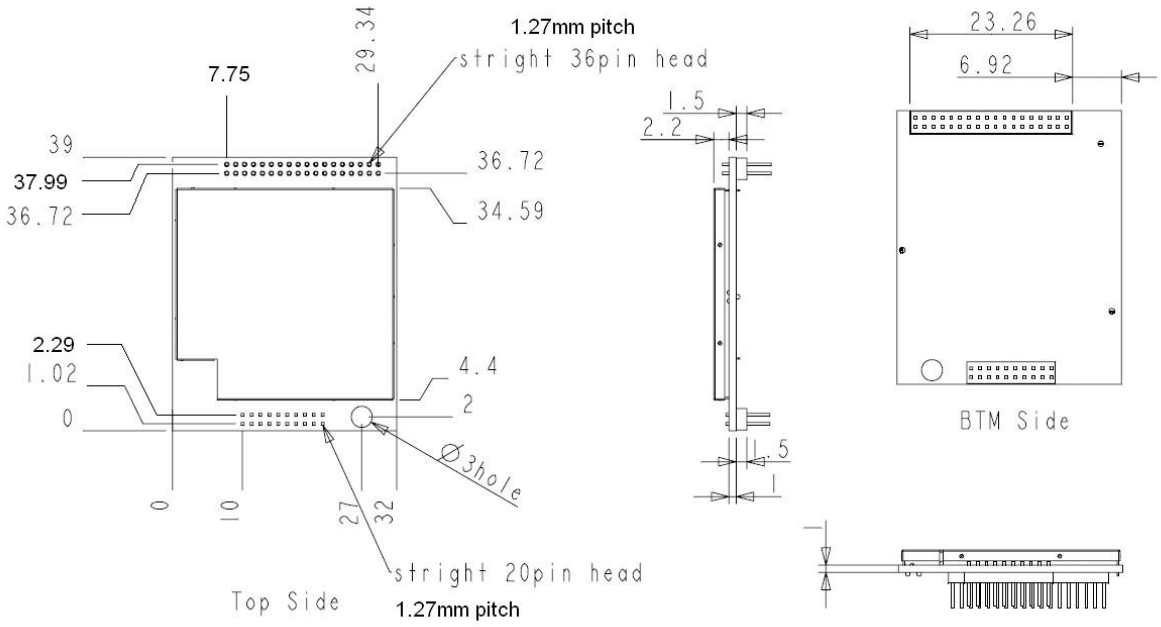

Figure 36. WIZ610WI Board Dimensions (unit : mm)

4. Demonstration and Test

In this chapter, an example is provided for you to test the functionality of WIZ610wi. The testing environments are the followings:

<Hardware>

- A PC equipped with a RS-232 serial port
- WIZ610WI module and WIZ610WI base board
- Connect PC and module's Ethernet port by using an Ethernet Cable(Direct or Crossover)
- Connect PC and module's serial port by using a serial cable

<Software>

- Hyper Terminal (or any other terminal program)

STEP1.

① Connect the PC and WIZ610wi base board by using a serial cable.

② Connect the PC and WIZ610wi base board by using an Ethernet cable.

③ Turn on the power switch of WIZ610WI base board.

STEP2. (WIZ610wi Environment Setup)

① On your PC, go to the "Network Setting" and connect to your WIZ610wi in the "Wireless Network Connection".

② In your web browser, input IP address of WIZ610wi (Default : 192.168.1.254). If configuration page appears, click "Serial setup" menu and set the serial parameters.

STEP3. (Data Transmission)

① Execute terminal program at the PC. (Ex: Hyper Terminal)

② Set the baud rate as the same value of WIZ610wi.

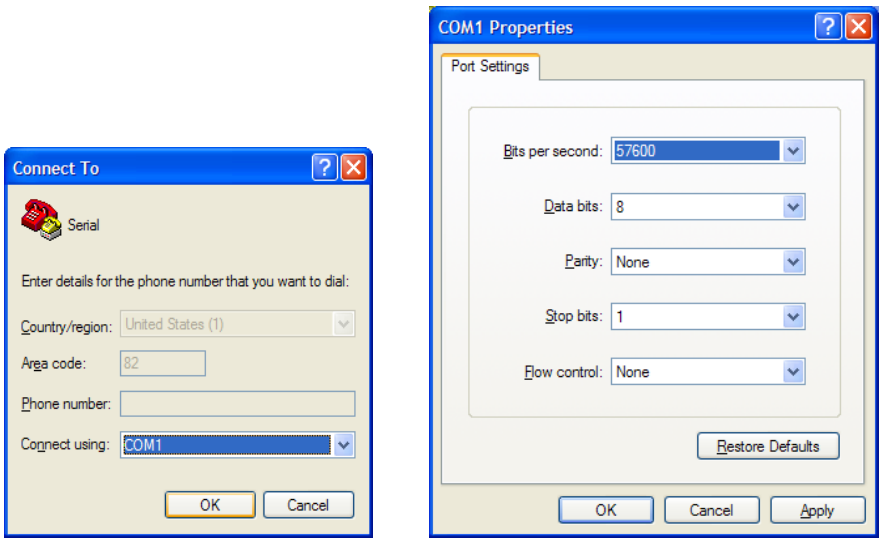

Figure 37. Serial Terminal Program configuration

③ Connect to "WIZ610wi" in the Wireless Network Setting of your PC

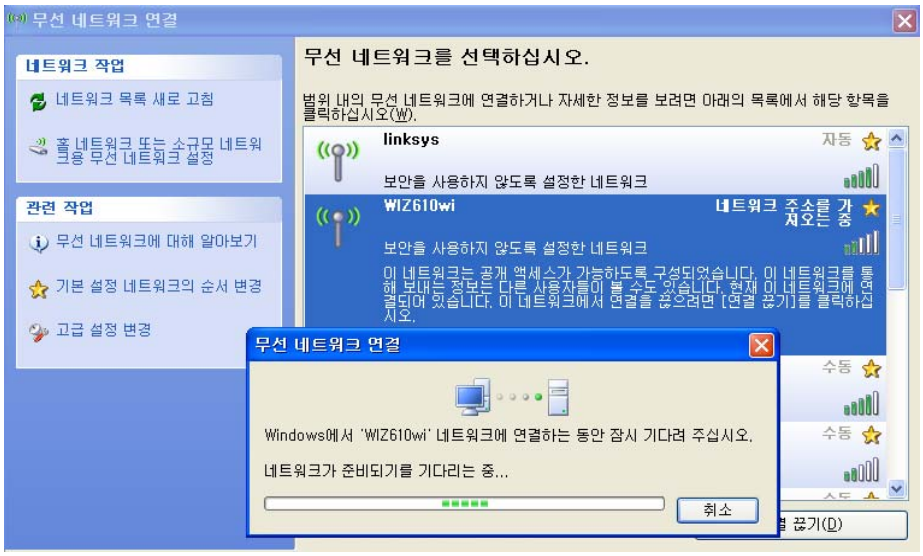

④ Execute one more terminal program, and set IP address and Port number.

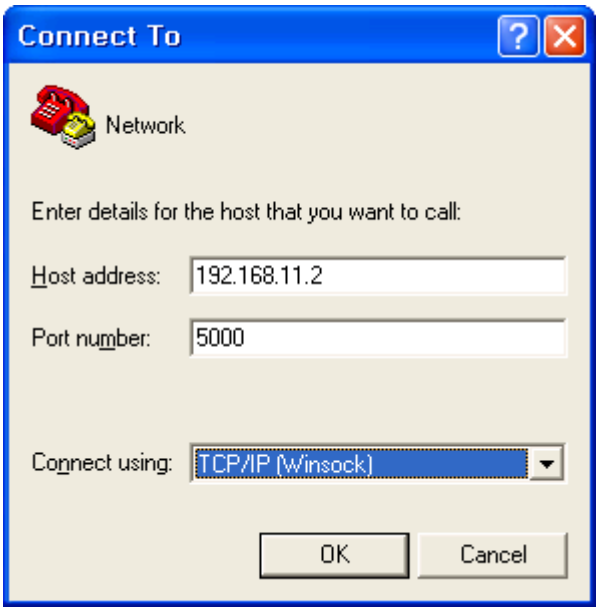

Figure 38. Network Terminal Program configuration

⑤ Input any characters in the Hyper Terminal for Serial. (In the example below, "01234567890" is input). The same characters are outputted in the Hyper Terminal for Network. A Serial to Wireless LAN test was performed.

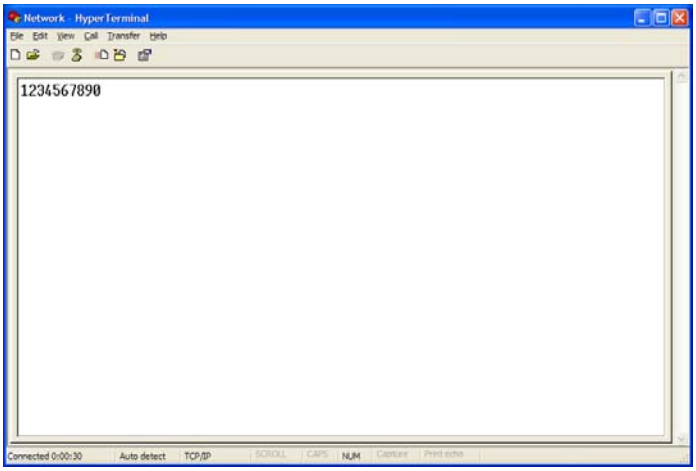

Figure 39. Received Data by Network Terminal Program

⑥ In the same way, input any character at the screen of terminal program for network, and check if same character is displayed at the screen for serial. (Ethernet to Serial)

※ The above test can also be performed in a program called, "Device Terminal program", which is easy and simple to use.

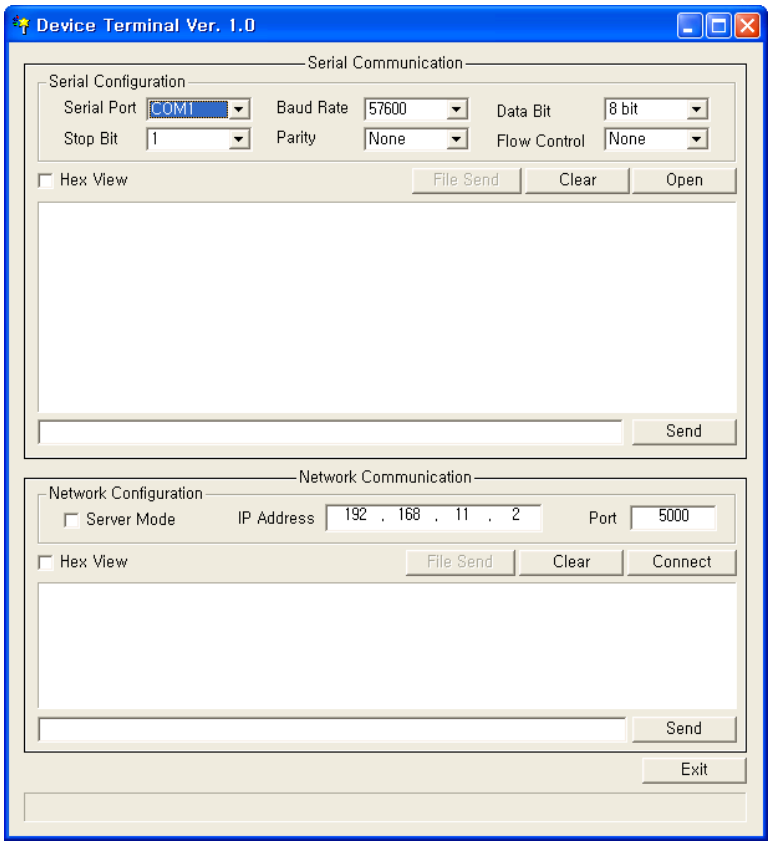

Figure 40. Device Terminal Program

Device Terminal is a program which integrates both serial and network communications into one user interface so that you can test your WIZnet gateway module easily.

As shown in above Figure, the upper part of the program allows you to configure your serial setting of WIZ610wi. By clicking the "Open" button, serial communication is enabled.

The lower part of the program allows you to configure the network settings. You can test both TCP Client and TCP Server modes at the same time. If the Server Mode is enabled, Device Terminal will operate as server mode, and the WIZ610wi module will work as client mode. The PC where the Device Terminal is operating will work as a server, the IP address of the PC should be set as Server IP of the module. If Server mode is not checked, Device Terminal will operate as client mode, and the module as server. For the IP address and port, please input your IP address and port number of WIZ610wi and click the "Connect" button to start a network communication.

When serial and network terminals are connected, input any character in the Data Input window and click "Send" button. You can check the data is transferred into the another window.

5. Serial Configuration

Serial Command Format

It is possible to configure WIZ610wi by using serial command.
Pin number 4 of WIZ610wi is Hardware trigger pin.('1': H/W trigger disable, '0': enable)
Or you can use h/w trigger switch of WIZ610wi EVB board

< Frame Format >

Command Frame format

Descriptor	STX	Command code	Parameter	ETX
Length(bytes)	1	2	Variable	1

Table 11. Serial Configuration Frame format

Reply Frame format

Descriptor	STX	Reply code	Parameter	ETX
Length(bytes)	1	1	Variable	1

Table 12. Serial Configuration Reply Frame format

STX & ETX

Setting	Comments
STX	'<' : Hex = 3Ch
ETX	'>' : Hex = 3Eh

Table 13. Serial Configuration STX & ETX

Reply Code

Reply	Comments
S	Command was successful
F	Command failed

0	Invalid STX
1	Invalid command
2	Invalid parameter
3	Invalid ETX
E	Enter Serial Command Mode

Table 14. Serial Configuration Reply Code

Command Code

Command	Get/ Set	Comments	Parameter	Time (sec)
Network				
RF	Get	Firmware Version	*** Command Syntax** <RF> *** Response Syntax** <Svx.x.x>	1
RA	Get	MAC Address	*** Command Syntax** <RA> *** Response Syntax** <S0xx.xx.xx.xx.xx.xx_1xx.xx.xx.xx.xx.xx> 0:Ethernet MAC address, 1:Wireless MAC address,	1
RI	Get	IP Address	*** Command Syntax** <RI> *** Response Syntax** <Sxxx.xxx.xxx.xxx>	1
WI	Set	IP Address	*** Command Syntax** <WIxxx.xxx.xxx.xxx> *** Response Syntax** <S>	2
RS	Get	Subnet Mask	*** Command Syntax** <RS> *** Response Syntax** <Sxxx.xxx.xxx.xxx>	1

WS	Set	Subnet Mask	*** Command Syntax** <WSxxx.xxx.xxx.xxx> *** Response Syntax** <S>	2
RG	Get	Gateway	*** Command Syntax** <RG> *** Response Syntax** <Sxxx.xxx.xxx.xxx>	1
WG	Set	Gateway	*** Command Syntax** <WGxxx.xxx.xxx.xxx> *** Response Syntax** <S>	2
RD	Get	DHCP Server	*** Command Syntax** <RD> *** Response Syntax** <Sx> 1:Enable, 0:Disable	1
WD	Set	DHCP Server	*** Command Syntax** <WDx> 1:Enable, 0:Disable *** Response Syntax** <S>	2
RH	Get	DHCP Start/End IP	*** Command Syntax** <RH> *** Response Syntax** <Sxxx.xxx.xxx.xxx_xxx.xxx.xxx.xxx> Start IP address_End IP address	1
WH	Set	DHCP Start/End IP	*** Command Syntax** <WHxxx.xxx.xxx.xxx_xxx.xxx.xxx.xxx> Start IP address_End IP address *** Response Syntax** <S>	3
DL	Get	Wireless Active Client List	*** Command Syntax** <DL> *** Response Syntax** <Sxxxxxxxxxxxx_xx_xx_xx[:xxxxxxxxxxxx_xx_xx_xx:...]>	1

			MAC address_Channel_TxRate_RSSI	
RL	Get	DHCP Client List	*** Command Syntax** <RL> *** Response Syntax** <Sxxx.xxx.xxx.xxx_xxxxxxxxxxxx[:xxx.xxx.xxx.xxx_xxxxxxxxxxxx:...]> IP address_MAC address	1
WV	Set	DNS Server	*** Command Syntax** <WV0> or <WV1_xxx.xxx.xxx.xxx[_xxx.xxx.xxx.xxx]> 0:Auto_DNS server IP address, 1:Manual *** Response Syntax** <S>	1
RV	Get	DNS Server	*** Command Syntax** <RV> *** Response Syntax** <Sx_xxx.xxx.xxx.xxx[_xxx.xxx.xxx.xxx]> or<S0> 0:Auto_DNS server IP address, 1:Manual	1
RT	Get	WAN Port	*** Command Syntax** <RT> *** Response Syntax** <S0_xxx.xxx.xxx.xxx_xxx.xxx.xxx.xxx_xxx.xxx.xxx.xxx_xxx.xxx.xxx.xxx> or <S1_xxx.xxx.xxx.xxx_xxx.xxx.xxx.xxx_xxx.xxx.xxx.xxx> or <S2_User Name_Password> 0:Static, 1:DHCP Client, 2:PPPoE -Static: 0_Ipaddress_Subnet_Gateway_DNS -DHCP Client: 1_IPaddress_Subnet_Gateway -PPPoE: 2_UserName_Password	2

WT	Set	WAN Port	*** Command Syntax** <WT0_xxx.xxx.xxx.xxx_xxx.xxx.xxx.xxx_xxx.xxx.xxx.xxx_xxx.xxx.xxx.xxx.xxx> or <WT1> or <WT2_User Name_Password> 0:Static, 1:DHCP Client, 2:PPPoE -Static: 0_Ipaddress_Subnet_Gateway_DNS -DHCP Client: 1 -PPPoE: 2_UserName_Password *** Response Syntax** <S>	1
RC	Get	Connection status	*** Command Syntax** <RC> *** Response Syntax** <Sx> 0: Not Connect, 1:Connect	1
WC	Set	TCP connection close	*** Command Syntax** <WC> *** Response Syntax** <S>	
QZ	Get	Current system status	*** Command Syntax** <QZ> *** Response Syntax** <Sx> 0:Normal 1:During Flash Erase 2:During Flash Write 3:During Firmware Upgrade	1
Wireless				
DB	Get	Wireless Band	*** Command Syntax** <DB> *** Response Syntax** <Sx> 0: 11b+g, 2: 11b, 3:11g	1
GB	Set	Wireless Band	*** Command Syntax** <GBx>	2

			0: 11b+g, 2: 11b, 3:11g *** Response Syntax** <S>	
DO	Get	Operation Mode	*** Command Syntax** <DO> *** Response Syntax** <Sx> 0:AP, 1:Gateway, 2: AP+WDS, 3:Client	1
GO	Set	Operation Mode	*** Command Syntax** <GOx> 0:AP, 1:Gateway, 2: AP+WDS, 3:Client *** Response Syntax** <S>	20
DS	Get	SSID	*** Command Syntax** <DS> *** Response Syntax** <Sxxxx~> 1~32 chars	1
GS	Set	SSID	*** Command Syntax** <GSxxxx~> 1~32 chars *** Response Syntax** <S>	1
DC	Get	Channel	*** Command Syntax** <DC> *** Response Syntax** <Sx> 0:Auto, 1~13:Channel number	1
GC	Set	Channel	*** Command Syntax** <GCx> 0:Auto, 1~13:Channel number *** Response Syntax** <S>	2
DW	Get	WDS	*** Command Syntax** <DW> *** Response Syntax**	1

			<Sx_x_xxxxxxxxxxx_xxx~> 1:Master, 2:Slave _count_MACaddress_Comment[_MACaddress_Comment_...]	
GW	Set	WDS	*** Command Syntax** <GWx_x_x_xxxxxxxxxxx_xxx~> 1:Master, 2:Slave _count_MACaddress_Comment[_MACaddress_Comment_...] *** Response Syntax** <S>	1
DP	Get	Tx Power	*** Command Syntax** <DP> *** Response Syntax** <Sxx> 0: off, 1~16: power(dBm)	1
GP	Set	Tx Power	*** Command Syntax** <GPxx> 0: off, 1~16: power(dBm) *** Response Syntax** <S>	2
DR	Get	Data Rate	*** Command Syntax** <DR> *** Response Syntax** <Sxx> xx: 1/2/5/11/24/36/48/54	1
GR	Set	Data Rate	*** Command Syntax** <GRxx> xx: 1/2/5/11/24/36/48/54 *** Response Syntax** <S>	3
DH	Get	Broadcast SSID	*** Command Syntax** <DH> *** Response Syntax** <Sx> 0:Enable, 1:Disable	1
GH	Set	Broadcast SSID	*** Command Syntax** <GHx>	1

			0:Enable, 1:Disable *** Response Syntax** <S>	
DM	Get	WMM	*** Command Syntax** <DM> *** Response Syntax** <Sx> 1:Enable, 0:Disable	1
GM	Set	WMM	*** Command Syntax** <GMx> 1:Enable, 0:Disable *** Response Syntax** <S>	1
DA	Get	MAC Access Control	*** Command Syntax** <DA> *** Response Syntax** <Sx_x_xxxxxxxxxxx_xxx~> 0:Disable, 1:AllowListed, 2:DenyListed[_count[_MACaddress_Comment]]	1
GA	Set	MAC Access Control	*** Command Syntax** <GAx_x_x_xxxxxxxxxxx_xxx~> 0:Disable, 1:AllowListed, 2:DenyListed[_1:add,2:delete_count_MACaddress_Comment] *** Response Syntax** <S>	5
DI	Get	Site Survey	*** Command Syntax** <DI> *** Response Syntax** <Sxxxx_xxxxxxxxxxx_xx_xx_x> SSID_BSSID_Channel_RSSI_Security	15
GI	Set	Connect AP	*** Command Syntax** <GIxxxx~_xxx~> SSID_Security Key Before using <GI> command, perform the site survey using <DI> commands and connect to a SSID. If WEB is used for AP authentication, and the defalut keyID is not '1', the	3

			connection is not established. In this cause, use <GU>command for the connection. *** Response Syntax** <S>	
DN	Get	Alias Name	*** Command Syntax** <DN> *** Response Syntax** <Sxxx~> Alias Name, Max Length: 29 characters	1
GN	Set	Alias Name	*** Command Syntax** <GNxxx~> Alias Name, Max Length: 29 characters *** Response Syntax** <S>	1
QP	Get	Module Status Checking	*** Command Syntax** <QP> *** Response Syntax** <Sx_xxxx_xxxxxxxxxxx_xx_xxM_xx> Conn_status 0: not connected, 1: connected. Conn status_SSID_BSSID_CHAN_RATE_RSSI	2
Security				
DU	Get	Security Status	*** Command Syntax** <DU> *** Response Syntax** <Sx_x_x_x_x_x_x_x> AuthMode_Encrypt[_DefaultKey_KeyLength_KeyFormat_KeyValue_radiusPasswd_radiusIP_radiusPort] AuthMode: 0(Open or Shared), 1(Open), 2(802.1x), 3(Shared), 4(WPA), 5(WPA-PSK), 6(WPA2), 7(WPA2-PSK) Encrypt: 0(None),1 (WEP), 2(TKIP), 3(AES), 4(TKIP_AES) DefaultKey: 1~4 KeyLength: 0(None), 1(WEP64), 2(WEP128) KeyFormat(WEP): 0(Ascii), 1(Hex) KeyFormat(WPA-PSK): 0(Passphrase), 1(Hex)	1
GU	Set	Security Control	*** Command Syntax** <GUx_x_x_x_x_x_x_x>	15

			AuthMode_Encrypt[_DefaultKey_KeyLength_KeyFormat_KeyValue_radiusPasswd_radiusIP_radiusPort] AuthMode: 0(Open or Shared), 1(Open), 2(802.1x), 3(Shared), 4(WPA), 5(WPA-PSK), 6(WPA2), 7(WPA2-PSK) Encrypt: 0(None),1 (WEP), 2(TKIP), 3(AES), 4(TKIP_AES) DefaultKey: 1~4 KeyLength: 0(None), 1(WEP64), 2(WEP128) KeyFormat(WEP): 0(Ascii), 1(Hex) KeyFormat(WPA-PSK): 0(Passphrase), 1(Hex) *** Response Syntax** <S>	
Serial				
RK	Get	Protocol	*** Command Syntax** <RK> *** Response Syntax** <Sx> 0: TCP, 1: UDP	2
WK	Set	Protocol	*** Command Syntax** <WKx> 0: TCP, 1: UDP *** Response Syntax** <S>	1
RM	Get	Mode	*** Command Syntax** <RM> *** Response Syntax** <Sx> 0:Client, 1:Mixed, 2:Server	2
WM	Set	Mode	*** Command Syntax** <WMx> 0:Client, 1:Mixed, 2:Server *** Response Syntax** <S>	1
RX	Get	Server IP	*** Command Syntax** <RX> *** Response Syntax** <Sxxx.xxx.xxx.xxx>	1

			Server IP address	
WX	Set	Server IP	*** Command Syntax** <WXxxx.xxx.xxx.xxx> Server IP address *** Response Syntax** <S>	2
RP	Get	Port	*** Command Syntax** <RP> *** Response Syntax** <Sxxxxx> Port number: 0~65535	1
WP	Set	Port	*** Command Syntax** <WPxxxxx> Port number: 0~65535 *** Response Syntax** <S>	1
RB	Get	Baudrate_DataBit_Parity_Flow_Stopbits	*** Command Syntax** <RB> *** Response Syntax** <Sxxxxx> [Baudrate] 1: 115200, 2: 57600, 3: 38400, 4: 19200, 5: 9600, 6: 4800, 7: 2400, 8: 1200, 0: 230400, 9:460800, a: 921600 [data byte] 7: 7bit, 8: 8bit [parity] 0: no parity, 1: Odd, 2: Even [Flow control] 0: no, 1: Xon/Xoff, 2: RTS/CTS [Stop bits]; 1: 1stop, 2:2stop	2
WB	Set	Baudrate_DataBit_Parity_Flow_Stopbits	*** Command Syntax** <WBxxxxx> [Baudrate] 1: 115200, 2: 57600, 3: 38400, 4: 19200, 5: 9600, 6: 4800, 7: 2400, 8: 1200, 0: 230400, 9:460800, a: 921600 [data byte] 7: 7bit, 8: 8bit [parity] 0: no parity, 1: Odd, 2: Even [Flow control] 0: no, 1: Xon/Xoff, 2: RTS/CTS	5

			[Stop bits]; 1: 1stop, 2:2stop *** Response Syntax** <S>	
RW	Get	Domain Name	*** Command Syntax** <RW> *** Response Syntax** <Sxxxx~> Domain name: Max 64 characters	2
WW	Set	Domain Name	*** Command Syntax** <WWxxxx~> Domain name: Max 64 characters *** Response Syntax** <S>	2
QT	Get	Time	*** Command Syntax** <QT> *** Response Syntax** <Sxxxxx> 0~65535	1
OT	Set	Time	*** Command Syntax** <OTxxxxx> 0~65535 *** Response Syntax** <S>	1
QS	Get	Size	*** Command Syntax** <QS> *** Response Syntax** <Sxxx> 0~255	1
OS	Set	Size	*** Command Syntax** <OSxxx> 0~255 *** Response Syntax** <S>	1
QC	Get	Char	*** Command Syntax** <QC> *** Response Syntax**	1

			<Sxx> 00~ff	
OC	Set	Char	*** Command Syntax** <OCxx> 00~ff *** Response Syntax** <S>	1
QI	Get	Inactivity Time	*** Command Syntax** <QI> *** Response Syntax** <Sxx> 00~60	1
OI	Set	Inactivity Time	*** Command Syntax** <OIxx> 00~60 *** Response Syntax** <S>	1
QU	Get	TCP Connection Option	*** Command Syntax** <QU> *** Response Syntax** <Sx> 0~1 0: Try TCP connection at the TCP client mode regardless of serial data 1: Try TCP connection at the TCP client mode when serial data is received	1
OU	Set	TCP Connection Option	*** Command Syntax** <OUx> 0~1 0: Try TCP connection at the TCP client mode regardless of serial data 1: Try TCP connection at the TCP client mode when serial data is received *** Response Syntax** <S>	1
RU	Get	Get Aux port	*** Command Syntax**	1

			<RU> *** Response Syntax** <Sx_x_x_a.b.c.d_x> Enable[_Protocol_Mode_ServerIP or Domain_ServerPort] Enable: 0(Disable), 1(Enable) If Disable is set, data can be omitted. Protocol: 0(UDP), 1(TCP) Mode: 0(Server), 1(Client) ServerIP: a.b.c.d format Domain: xxx.yyy.zzz ServerPort: 0~65535	
WU	Set	Set Aux port	*** Command Syntax** <WUx_x_x_a.b.c.d_x> Enable[_Protocol_Mode_ServerIP or Domain_ServerPort] Enable: 0(Disable), 1(Enable) If Disable is set, data can be omitted. Protocol: 0(UDP), 1(TCP) Mode: 0(Server), 1(Client) ServerIP: a.b.c.d format Domain: xxx.yyy.zzz ServerPort: 0~65535 *** Response Syntax** <S>	1
RE	Get	Get data flow	*** Command Syntax** <RE> *** Response Syntax** <Sx> 0~2 0: Transmit serial data to the main and aux port. (default) 1: Transmit serial data to the main port 2: Transmit serial data to the aux port	1
WE	Set	Set data flow	*** Command Syntax** <WEx> 0~2 0: Transmit serial data to the main and aux port. (default) 1: Transmit serial data to the main port	1

			2: Transmit serial data to the aux port If module is rebooted or any configuration value is changed, it returns to default. *** Response Syntax** <S>	
RZ	Get	Get insert tag	*** Command Syntax** <RZ> *** Response Syntax** <Sx_xxx_xxx> Enable(0-1)[_String1_String2] 0: disable, default value, String can be omitted. 1: enable String1, String2: It is available when Enable is set as "1". String1 is the string which is added when transmitted from main port to serial. String2 is the string which is added when transmitted from aux port to serial. It is composed of maximum 16 characters	1
WZ	Set	Set insert tag	*** Command Syntax** <WZx_xxx_xxx> Enable(0-1)[_String1_String2] 0: disable, default value, String can be omitted. 1: enable String1, String2: It is available when Enable is set as "1". String1 is the string which is added when transmitted from main port to serial. String2 is the string which is added when transmitted from aux port to serial. It is composed of maximum 16 characters. *** Response Syntax** <S>	1
CC	Set	Change Client Mode	*** Command Syntax** <CCxxx.xxx.xxx.xxx_xxxxx> TCP Server IP address_port (0~65535) Change main port mode to TCP client mode. *** Response Syntax** <S>	1
CS	Get	Connection	*** Command Syntax**	1

		status	<CS> *** Response Syntax** <OK> : TCP is well connected <FAIL> : TCP is not connected The same command with <RC> that except response format.	
CQ	Set	Change Server mode	*** Command Syntax** <CQxxxxx> Port number: 0~65535 Change main port mode to TCP server mode. *** Response Syntax** <S>	1
Others				
WF	Set	Factory Default	*** Command Syntax** <WF> *** Response Syntax** <S>	20
WR	Set	Restart	*** Command Syntax** <WR> *** Response Syntax** <S>	20

error code	S	<S> or <Sxx…>	Commend is successfully applied
	F	<F>	Failed to apply
	0	<0>	"<" is wrong
	1	<1>	There is not in command list
	2	<2>	Wrong Parameter factor
	3	<3>	">" is wrong
	4	<4>	Do not work in current mode
	5	<5>	No more add list. **-Limit-** *WDS: 4 list *ACL: 16 list

<table>
<tr><td rowspan="3">Notice</td><td>If input "_" in fact, should input"__" instead of "_".
For example SSID, PSK etc.
<DS> --> <S11__22>: SSID: 11_22
<GS11_22> --> <S>: SSID: 11_22
<QP> --> <S1_11__22_000102030405_...>: SSID: 11_22</td></tr>
<tr><td>If multi command input, response time be delayed
For example DA, GA, DW, GW</td></tr>
<tr><td>Security Available mode

AP/GW Mode
AuthMode: 0-7
EncryptType: 0-3
Client Mode
AuthMode: 1,3,5,7
EncryptType: 0,1,4</td></tr>
</table>

**Security Example parameter <GU5_2_0_0_12345678> <GU4_2_0_0_12345678_abcd_192.168.123.111_1812>

6. Reference Schematics

In this chapter, the reference schematics are provided for the WIZ610wi's MII & UART interfaces.

6.1 WIZ610wi Module Pin assign

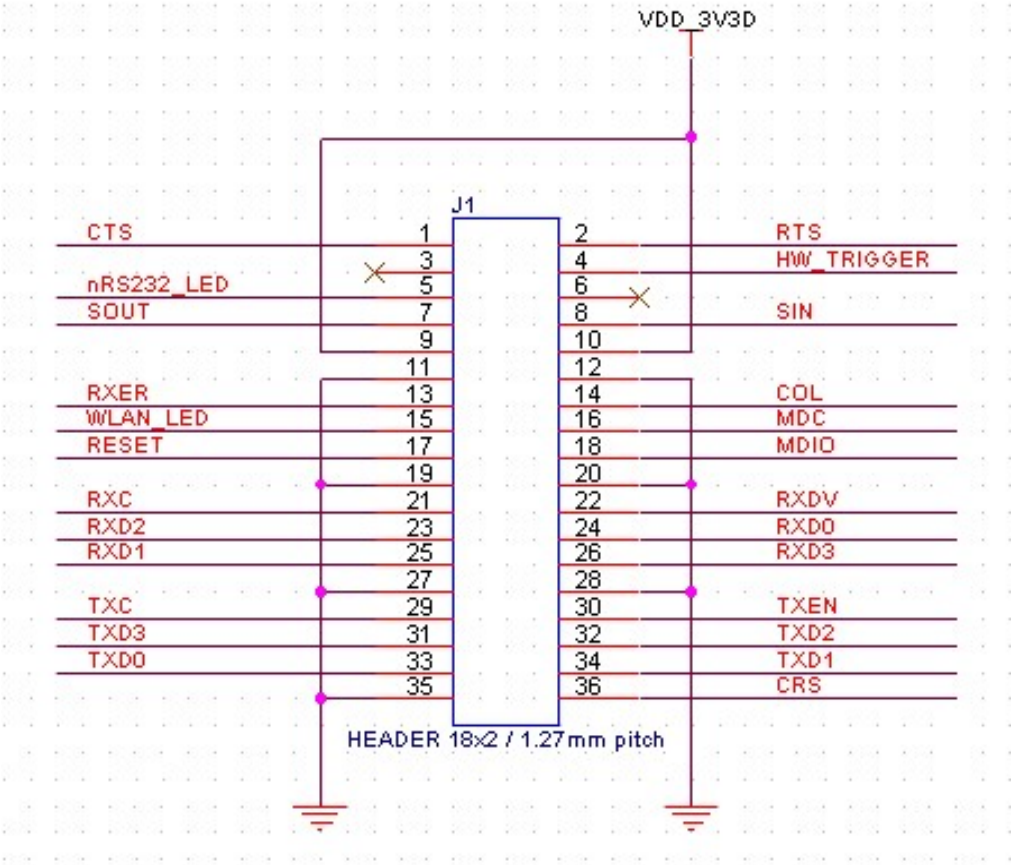

Figure 41. WIZ610wi Module Pin Assignment

MII interface signal			
TXD[0..3]	MII transmit data	TXEN	MII transmit enable
TXC	MII transmit clock	RXDV	MII receive data valid
RXD[0..3]	MII receive data	RXC	MII receive clock

COL	MII collision	CRS	MII Carrier sense
RXER	MII Receive Data Error		
UART interface signal			
SIN	RS-232C RXD	SOUT	RS-232C TXD
CTS	RS-232C CTS	RTS	RS-232C RTS

Table 15. WIZ610wi Pin Assignment

6.2 External PHY interface using MII

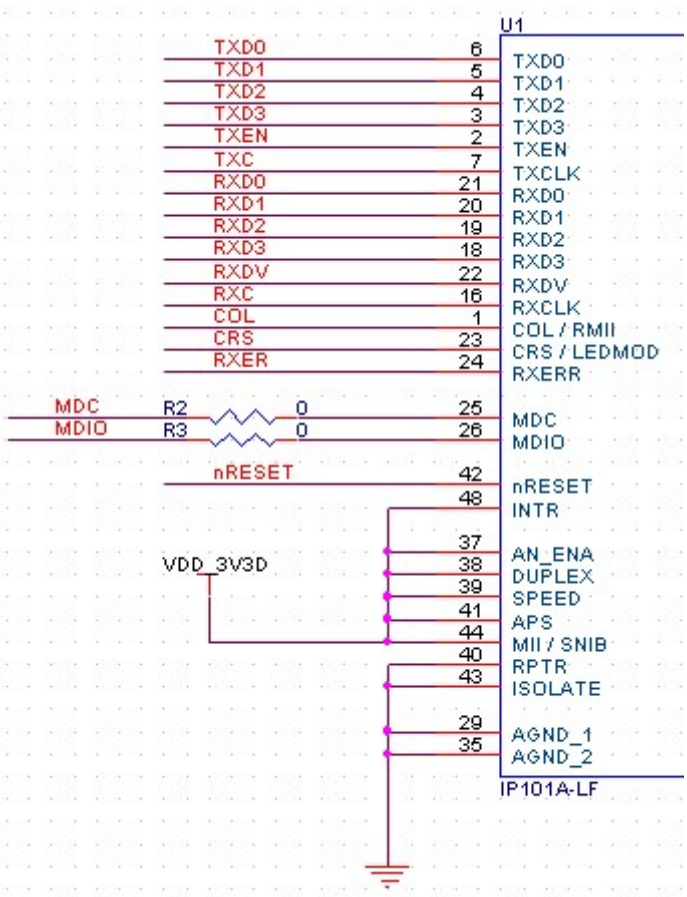

Figure 42. Schematic - External PHY Interface using MII

As shown in the above schematic, each MII interface signal of WIZ610wi can be connected to MII interface by using an external PHY chip.

6.3 RS-232C interface

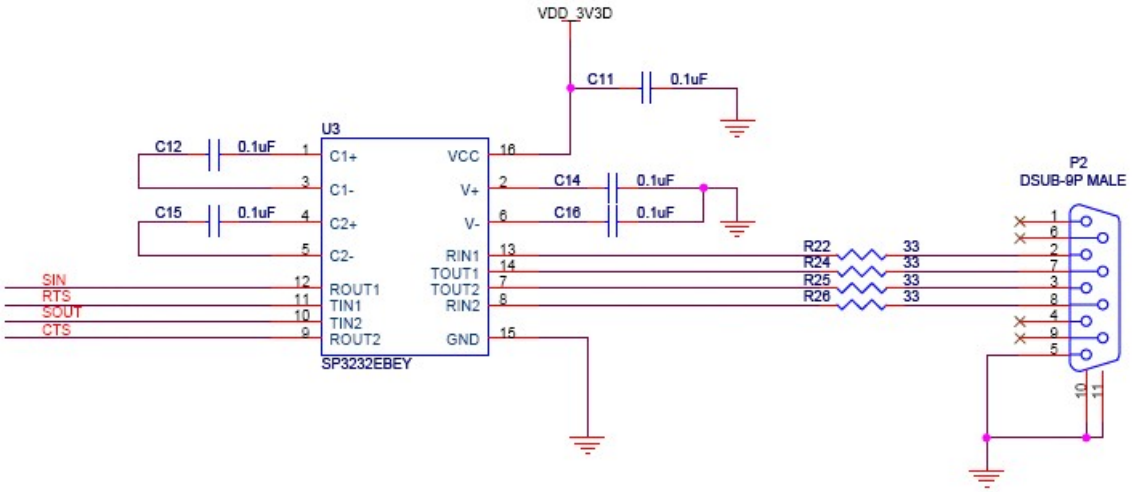

Figure 43. Schematic – RS-232C Interface

As shown above diagram, each UART interface signal can be connected to the interface of RS-232C transceiver chip. (e.g. Sipex's SP3232EBEY RS-232C Transceiver chip)

6.4 Serial to WiFi interface

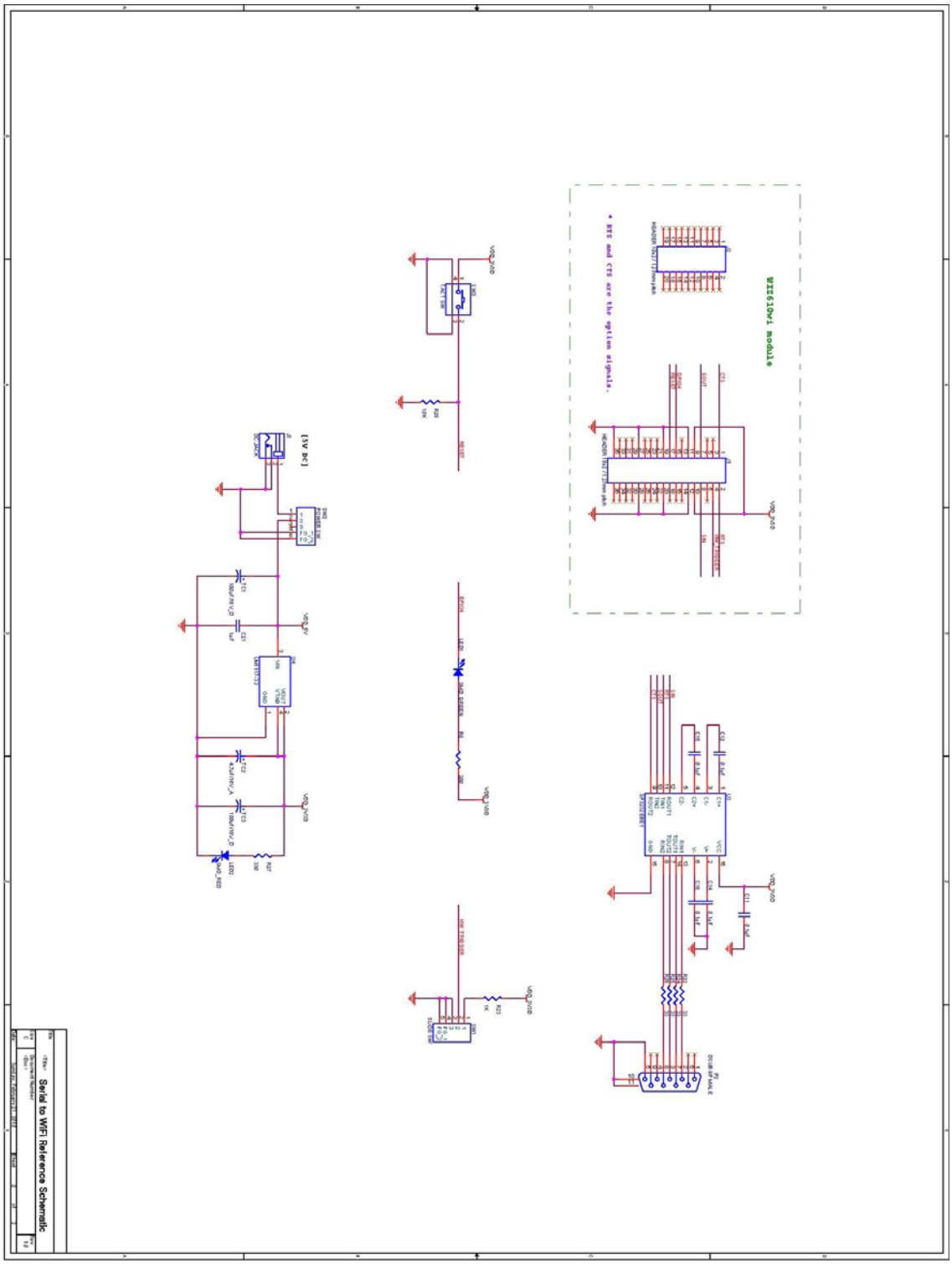

Figure 44. Schematic – Serial to WiFi Reference Schematic

7. Aging test report

7.1 Test environment

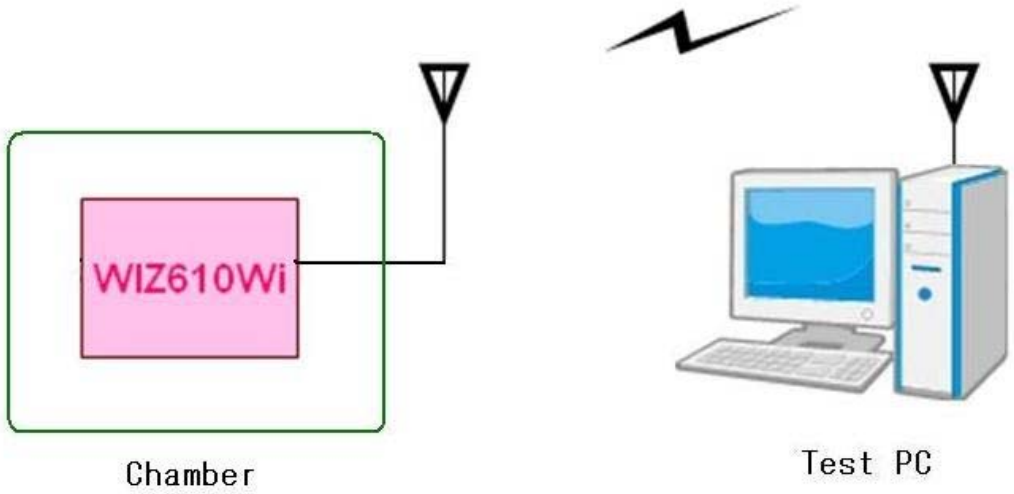

Figure 45. Aging test environment

7.2 Test condition

1) Test condition : -30℃ ~ +70℃ (Humidity 90%)

2) Low temperature test

: Testing after 1 hour storage in the chamber at -30℃ condition.

3) High temperature test

: Testing after 1 hour storage in the chamber at +70℃ and 90%(humidity) condition.

7.3 Test result

Date	Time	Setting temp.	Setting humidity	Current temp.	Current humidity	Pass / Fail
2009.04.09	17:00	25℃	50%	25℃	50%	Pass
2009.04.09	22:00	70℃	90%	70℃	90%	Pass
2009.04.10	08:30	-30℃	0%	-30℃	0%	Pass
2009.04.10	11:00	25℃	50%	25℃	50%	Pass
2009.04.10	16:00	70℃	90%	70℃	90%	Pass
2009.04.10	21:30	-30℃	0%	-30℃	0%	Pass
2009.04.11	10:50	10℃	0%	10℃	0%	Pass
2009.04.11	14:10	25℃	50%	25℃	50%	Pass
2009.04.11	17:30	40℃	65%	40℃	65%	Pass
2009.04.11	20:50	55℃	75%	55℃	75%	Pass
2009.04.12	14:40	70℃	90%	70℃	90%	Pass
2009.04.13	12:40	70℃	90%	70℃	90%	Pass
2009.04.14	12:40	70℃	90%	70℃	90%	Pass
2009.04.14	23:40	25℃	50%	25℃	50%	Pass
2009.04.15	12:40	-30℃	0%	-30℃	0%	Pass
2009.04.15	13:40	-30℃	0%	-30℃	0%	Pass
2009.04.15	16:40	25℃	50%	-30℃	50%	Pass

Table 16. Aging test result