- **RS-232 Bus-Pin ESD Protection Exceeds ±15 kV Using Human-Body Model (HBM)**
- **Meets or Exceeds the Requirements of TIA/EIA-232-F and ITU v.28 Standards**
- **Operates With 3-V to 5.5-V V_{CC} Supply**
- **Operates Up To 250 kbit/s**
- **Two Drivers and Two Receivers**
- **Low Supply Current . . . 300 μA Typical**
- **External Capacitors . . . 4 × 0.1 μF**
- **Accepts 5-V Logic Input With 3.3-V Supply**
- **Alternative High-Speed Pin-Compatible Device (1 Mbit/s)**
  - **SNx5C3232**
- **Applications**
  - **Battery-Powered Systems, PDAs, Notebooks, Laptops, Palmtop PCs, and Hand-Held Equipment**

D, DB, DW, OR PW PACKAGE
(TOP VIEW)

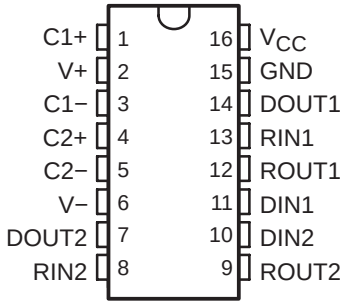

description/ordering information

ORDERING INFORMATION

T_A	PACKAGE†		ORDERABLE PART NUMBER	TOP-SIDE MARKING
−0°C to 70°C	SOIC (D)	Tube of 40	MAX3232CD	MAX3232C
		Reel of 2500	MAX3232CDR	
	SOIC (DW)	Tube of 40	MAX3232CDW	MAX3232C
		Reel of 2000	MAX3232CDWR	
	SSOP (DB)	Tube of 80	MAX3232CDB	MA3232C
		Reel of 2000	MAX3232CDBR	
	TSSOP (PW)	Tube of 90	MAX3232CPW	MA3232C
		Reel of 2000	MAX3232CPWR	
−40°C to 85°C	SOIC (D)	Tube of 40	MAX3232ID	MAX3232I
		Reel of 2500	MAX3232IDR	
	SOIC (DW)	Tube of 40	MAX3232IDW	MAX3232I
		Reel of 2000	MAX3232IDWR	
	SSOP (DB)	Tube of 80	MAX3232IDB	MB3232I
		Reel of 2000	MAX3232IDBR	
	TSSOP (PW)	Tube of 90	MAX3232IPW	MB3232I
		Reel of 2000	MAX3232IPWR	

† Package drawings, standard packing quantities, thermal data, symbolization, and PCB design guidelines are available at www.ti.com/sc/package.

Please be aware that an important notice concerning availability, standard warranty, and use in critical applications of Texas Instruments semiconductor products and disclaimers thereto appears at the end of this data sheet.

PRODUCTION DATA information is current as of publication date. Products conform to specifications per the terms of Texas Instruments standard warranty. Production processing does not necessarily include testing of all parameters.

Copyright © 2004, Texas Instruments Incorporated

description/ordering information (continued)

The MAX3232 device consists of two line drivers, two line receivers, and a dual charge-pump circuit with ±15-kV ESD protection pin to pin (serial-port connection pins, including GND). The device meets the requirements of TIA/EIA-232-F and provides the electrical interface between an asynchronous communication controller and the serial-port connector. The charge pump and four small external capacitors allow operation from a single 3-V to 5.5-V supply. The devices operate at data signaling rates up to 250 kbit/s and a maximum of 30-V/µs driver output slew rate.

Function Tables

EACH DRIVER

INPUT DIN	OUTPUT DOUT
L	H
H	L

H = high level, L = low level

EACH RECEIVER

INPUT RIN	OUTPUT ROUT
L	H
H	L
Open	H

H = high level, L = low level, Open = input disconnected or connected driver off

logic diagram (positive logic)

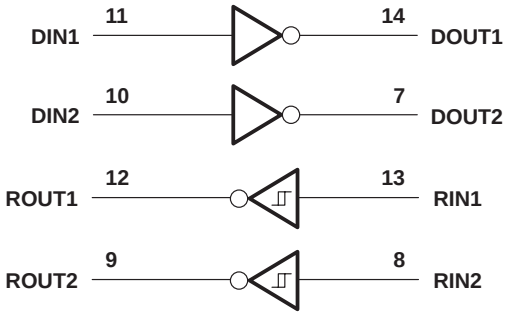

absolute maximum ratings over operating free-air temperature range (unless otherwise noted)†

Supply voltage range, V_{CC} (see Note 1) . . . . . −0.3 V to 6 V
Positive output supply voltage range, V+ (see Note 1) . . . . . −0.3 V to 7 V
Negative output supply voltage range, V− (see Note 1) . . . . . 0.3 V to −7 V
Supply voltage difference, V+ − V− (see Note 1) . . . . . 13 V
Input voltage range, V_I: Drivers . . . . . −0.3 V to 6 V
Receivers . . . . . −25 V to 25 V
Output voltage range, V_O: Drivers . . . . . −13.2 V to 13.2 V
Receivers . . . . . −0.3 V to V_{CC} + 0.3 V
Package thermal impedance, θ_{JA} (see Notes 2 and 3): D package . . . . . 73°C/W
DB package . . . . . 82°C/W
DW package . . . . . 57°C/W
PW package . . . . . 108°C/W
Operating virtual junction temperature, T_J . . . . . 150°C
Storage temperature range, T_{stg} . . . . . −65°C to 150°C

† Stresses beyond those listed under “absolute maximum ratings” may cause permanent damage to the device. These are stress ratings only, and functional operation of the device at these or any other conditions beyond those indicated under “recommended operating conditions” is not implied. Exposure to absolute-maximum-rated conditions for extended periods may affect device reliability.

NOTES: 1. All voltages are with respect to network GND.
2. Maximum power dissipation is a function of $T_J(max)$, θ_{JA}, and T_A. The maximum allowable power dissipation at any allowable ambient temperature is $P_D = (T_J(max) - T_A)/\theta_{JA}$. Operating at the absolute maximum T_J of 150°C can affect reliability.
3. The package thermal impedance is calculated in accordance with JESD 51-7.

recommended operating conditions (see Note 4 and Figure 4)

				MIN	NOM	MAX	UNIT
	Supply voltage		V_{CC} = 3.3 V	3	3.3	3.6	V
			V_{CC} = 5 V	4.5	5	5.5	
V_{IH}	Driver high-level input voltage	DIN	V_{CC} = 3.3 V	2			V
			V_{CC} = 5 V	2.4			
V_{IL}	Driver low-level input voltage		DIN			0.8	V
V_I	Driver input voltage		DIN	0		5.5	V
	Receiver input voltage			−25		25	
T_A	Operating free-air temperature		MAX3232C	0		70	°C
			MAX3232I	−40		85	

NOTE 4: Test conditions are C1−C4 = 0.1 µF at V_{CC} = 3.3 V ± 0.3 V; C1 = 0.047 µF, C2−C4 = 0.33 µF at V_{CC} = 5 V ± 0.5 V.

electrical characteristics over recommended ranges of supply voltage and operating free-air temperature (unless otherwise noted) (see Note 4 and Figure 4)

PARAMETER		TEST CONDITIONS		MIN	TYP‡	MAX	UNIT
I_{CC}	Supply current	No load,	V_{CC} = 3.3 V or 5 V		0.3	1	mA

‡ All typical values are at V_{CC} = 3.3 V or V_{CC} = 5 V, and T_A = 25°C.
NOTE 4: Test conditions are C1−C4 = 0.1 µF at V_{CC} = 3.3 V ± 0.3 V; C1 = 0.047 µF, C2−C4 = 0.33 µF at V_{CC} = 5 V ± 0.5 V.

DRIVER SECTION

electrical characteristics over recommended ranges of supply voltage and operating free-air temperature (unless otherwise noted) (see Note 4 and Figure 4)

PARAMETER		TEST CONDITIONS		MIN	TYP†	MAX	UNIT
V_{OH}	High-level output voltage	DOUT at R_L = 3 kΩ to GND,	DIN = GND	5	5.4		V
V_{OL}	Low-level output voltage	DOUT at R_L = 3 kΩ to GND,	DIN = V_{CC}	−5	−5.4		V
I_{IH}	High-level input current	V_I = V_{CC}			±0.01	±1	µA
I_{IL}	Low-level input current	V_I at GND			±0.01	±1	µA
I_{OS}‡	Short-circuit output current	V_{CC} = 3.6 V,	V_O = 0 V		±35	±60	mA
		V_{CC} = 5.5 V,	V_O = 0 V				
r_o	Output resistance	V_{CC}, V+, and V− = 0 V,	V_O = ±2 V	300	10M		Ω

† All typical values are at V_{CC} = 3.3 V or V_{CC} = 5 V, and T_A = 25°C.
‡ Short-circuit durations should be controlled to prevent exceeding the device absolute power dissipation ratings, and not more than one output should be shorted at a time.
NOTE 4: Test conditions are C1−C4 = 0.1 µF at V_{CC} = 3.3 V ± 0.3 V; C1 = 0.047 µF, C2−C4 = 0.33 µF at V_{CC} = 5 V ± 0.5 V.

switching characteristics over recommended ranges of supply voltage and operating free-air temperature (unless otherwise noted) (see Note 4 and Figure 4)

PARAMETER		TEST CONDITIONS		MIN	TYP†	MAX	UNIT
	Maximum data rate	C_L = 1000 pF, One DOUT switching,	R_L = 3 kΩ, See Figure 1	150	250		kbit/s
$t_{sk(p)}$	Pulse skew§	C_L = 150 pF to 2500 pF	R_L = 3 kΩ to 7 kΩ, See Figure 2		300		ns
SR(tr)	Slew rate, transition region (see Figure 1)	R_L = 3 kΩ to 7 kΩ, V_{CC} = 3.3 V	C_L = 150 pF to 1000 pF	6		30	V/µs
			C_L = 150 pF to 2500 pF	4		30	

† All typical values are at V_{CC} = 3.3 V or V_{CC} = 5 V, and T_A = 25°C.
§ Pulse skew is defined as $|t_{PLH} - t_{PHL}|$ of each channel of the same device.
NOTE 4: Test conditions are C1−C4 = 0.1 µF at V_{CC} = 3.3 V ± 0.3 V; C1 = 0.047 µF, C2−C4 = 0.33 µF at V_{CC} = 5 V ± 0.5 V.

RECEIVER SECTION

electrical characteristics over recommended ranges of supply voltage and operating free-air temperature (unless otherwise noted) (see Note 4 and Figure 4)

PARAMETER		TEST CONDITIONS	MIN	TYP†	MAX	UNIT
V_{OH}	High-level output voltage	I_{OH} = −1 mA	V_{CC}−0.6 V	V_{CC}−0.1 V		V
V_{OL}	Low-level output voltage	I_{OL} = 1.6 mA			0.4	V
V_{IT+}	Positive-going input threshold voltage	V_{CC} = 3.3 V		1.5	2.4	V
		V_{CC} = 5 V		1.8	2.4	
V_{IT-}	Negative-going input threshold voltage	V_{CC} = 3.3 V	0.6	1.2		V
		V_{CC} = 5 V	0.8	1.5		
V_{hys}	Input hysteresis (V_{IT+} − V_{IT-})			0.3		V
r_i	Input resistance	V_I = ±3 V to ±25 V	3	5	7	kΩ

† All typical values are at V_{CC} = 3.3 V or V_{CC} = 5 V, and T_A = 25°C.
NOTE 4: Test conditions are C1−C4 = 0.1 µF at V_{CC} = 3.3 V ± 0.3 V; C1 = 0.047 µF, C2−C4 = 0.33 µF at V_{CC} = 5 V ± 0.5 V.

switching characteristics over recommended ranges of supply voltage and operating free-air temperature (unless otherwise noted) (see Note 4 and Figure 3)

PARAMETER		TEST CONDITIONS	MIN	TYP†	MAX	UNIT
t_{PLH}	Propagation delay time, low- to high-level output	C_L= 150 pF		300		ns
t_{PHL}	Propagation delay time, high- to low-level output			300		ns
$t_{sk(p)}$	Pulse skew‡			300		ns

† All typical values are at V_{CC} = 3.3 V or V_{CC} = 5 V, and T_A = 25°C.
‡ Pulse skew is defined as $|t_{PLH} - t_{PHL}|$ of each channel of the same device.
NOTE 4: Test conditions are C1−C4 = 0.1 µF at V_{CC} = 3.3 V ± 0.3 V; C1 = 0.047 µF, C2−C4 = 0.33 µF at V_{CC} = 5 V ± 0.5 V.

PARAMETER MEASUREMENT INFORMATION

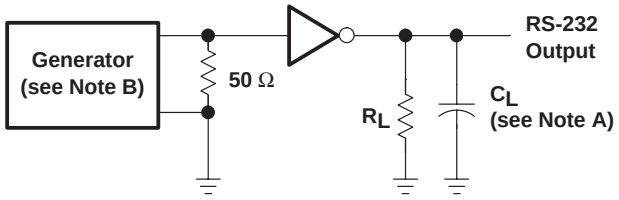

TEST CIRCUIT

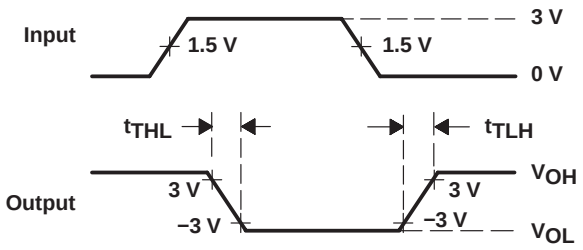

VOLTAGE WAVEFORMS

$$SR(tr) = \frac{6\ V}{t_{THL} \text{ or } t_{TLH}}$$

NOTES: A. C_L includes probe and jig capacitance.
B. The pulse generator has the following characteristics: PRR = 250 kbit/s, Z_O = 50 Ω, 50% duty cycle, $t_r \le 10$ ns, $t_f \le 10$ ns.

Figure 1. Driver Slew Rate

PARAMETER MEASUREMENT INFORMATION

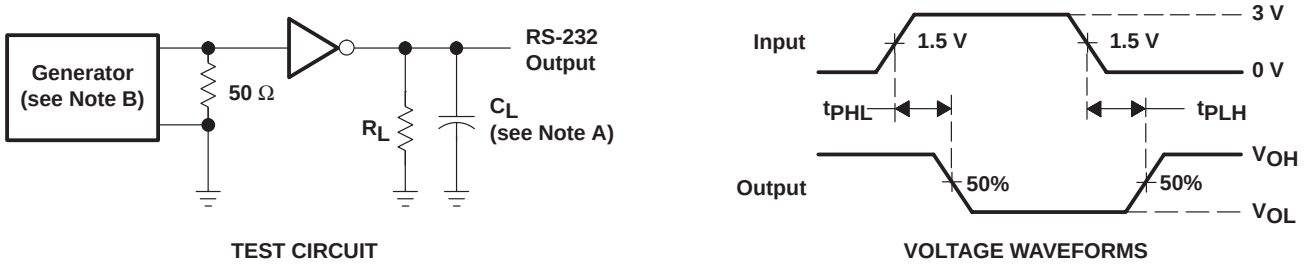

TEST CIRCUIT VOLTAGE WAVEFORMS

NOTES: A. C_L includes probe and jig capacitance.
B. The pulse generator has the following characteristics: PRR = 250 kbit/s, Z_O = 50 Ω, 50% duty cycle, $t_r \le 10$ ns, $t_f \le 10$ ns.

Figure 2. Driver Pulse Skew

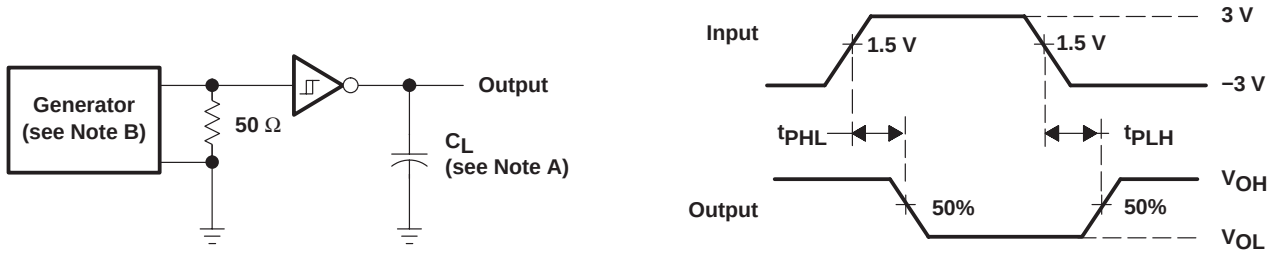

TEST CIRCUIT VOLTAGE WAVEFORMS

NOTES: A. C_L includes probe and jig capacitance.
B. The pulse generator has the following characteristics: Z_O = 50 Ω, 50% duty cycle, $t_r \le 10$ ns, $t_f \le 10$ ns.

Figure 3. Receiver Propagation Delay Times

APPLICATION INFORMATION

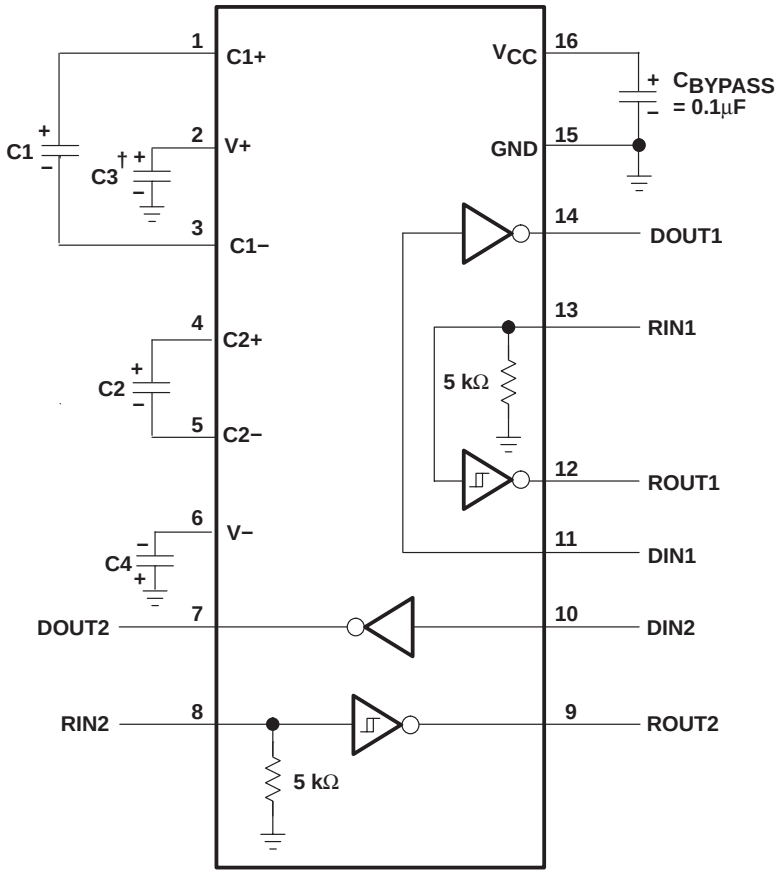

† C3 can be connected to V_{CC} or GND.

NOTES: A. Resistor values shown are nominal.

B. Nonpolarized ceramic capacitors are acceptable. If polarized tantalum or electrolytic capacitors are used, they should be connected as shown.

V_{CC} vs CAPACITOR VALUES

V_{CC}	C1	C2, C3, C4
3.3 V ± 0.3 V	0.1 μF	0.1 μF
5 V ± 0.5 V	0.047 μF	0.33 μF
3 V to 5.5 V	0.1 μF	0.47 μF

Figure 4. Typical Operating Circuit and Capacitor Values

PACKAGING INFORMATION

Orderable Device	Status (1)	Package Type	Package Drawing	Pins	Package Qty	Eco Plan (2)	Lead/Ball Finish	MSL Peak Temp (3)	Op Temp (°C)	Top-Side Markings (4)	Samples
MAX3232CD	ACTIVE	SOIC	D	16	40	Green (RoHS & no Sb/Br)	CU NIPDAU	Level-1-260C-UNLIM	0 to 70	MAX3232C	Samples
MAX3232CDB	ACTIVE	SSOP	DB	16	80	Green (RoHS & no Sb/Br)	CU NIPDAU	Level-1-260C-UNLIM	0 to 70	MA3232C	Samples
MAX3232CDBE4	ACTIVE	SSOP	DB	16	80	Green (RoHS & no Sb/Br)	CU NIPDAU	Level-1-260C-UNLIM	0 to 70	MA3232C	Samples
MAX3232CDBG4	ACTIVE	SSOP	DB	16	80	Green (RoHS & no Sb/Br)	CU NIPDAU	Level-1-260C-UNLIM	0 to 70	MA3232C	Samples
MAX3232CDBR	ACTIVE	SSOP	DB	16	2000	Green (RoHS & no Sb/Br)	CU NIPDAU	Level-1-260C-UNLIM	0 to 70	MA3232C	Samples
MAX3232CDBRE4	ACTIVE	SSOP	DB	16	2000	Green (RoHS & no Sb/Br)	CU NIPDAU	Level-1-260C-UNLIM	0 to 70	MA3232C	Samples
MAX3232CDBRG4	ACTIVE	SSOP	DB	16	2000	Green (RoHS & no Sb/Br)	CU NIPDAU	Level-1-260C-UNLIM	0 to 70	MA3232C	Samples
MAX3232CDE4	ACTIVE	SOIC	D	16	40	Green (RoHS & no Sb/Br)	CU NIPDAU	Level-1-260C-UNLIM	0 to 70	MAX3232C	Samples
MAX3232CDG4	ACTIVE	SOIC	D	16	40	Green (RoHS & no Sb/Br)	CU NIPDAU	Level-1-260C-UNLIM	0 to 70	MAX3232C	Samples
MAX3232CDR	ACTIVE	SOIC	D	16	2500	Green (RoHS & no Sb/Br)	CU NIPDAU	Level-1-260C-UNLIM	0 to 70	MAX3232C	Samples
MAX3232CDRE4	ACTIVE	SOIC	D	16	2500	Green (RoHS & no Sb/Br)	CU NIPDAU	Level-1-260C-UNLIM	0 to 70	MAX3232C	Samples
MAX3232CDRG4	ACTIVE	SOIC	D	16	2500	Green (RoHS & no Sb/Br)	CU NIPDAU	Level-1-260C-UNLIM	0 to 70	MAX3232C	Samples
MAX3232CDW	ACTIVE	SOIC	DW	16	40	Green (RoHS & no Sb/Br)	CU NIPDAU	Level-1-260C-UNLIM	0 to 70	MAX3232C	Samples
MAX3232CDWG4	ACTIVE	SOIC	DW	16	40	Green (RoHS & no Sb/Br)	CU NIPDAU	Level-1-260C-UNLIM	0 to 70	MAX3232C	Samples
MAX3232CDWR	ACTIVE	SOIC	DW	16	2000	Green (RoHS & no Sb/Br)	CU NIPDAU	Level-1-260C-UNLIM	0 to 70	MAX3232C	Samples
MAX3232CDWRE4	ACTIVE	SOIC	DW	16	2000	Green (RoHS & no Sb/Br)	CU NIPDAU	Level-1-260C-UNLIM	0 to 70	MAX3232C	Samples
MAX3232CDWRG4	ACTIVE	SOIC	DW	16	2000	Green (RoHS & no Sb/Br)	CU NIPDAU	Level-1-260C-UNLIM	0 to 70	MAX3232C	Samples

Orderable Device	Status (1)	Package Type	Package Drawing	Pins	Package Qty	Eco Plan (2)	Lead/Ball Finish	MSL Peak Temp (3)	Op Temp (°C)	Top-Side Markings (4)	Samples
MAX3232CPW	ACTIVE	TSSOP	PW	16	90	Green (RoHS & no Sb/Br)	CU NIPDAU	Level-1-260C-UNLIM	0 to 70	MA3232C	Samples
MAX3232CPWE4	ACTIVE	TSSOP	PW	16	90	Green (RoHS & no Sb/Br)	CU NIPDAU	Level-1-260C-UNLIM	0 to 70	MA3232C	Samples
MAX3232CPWG4	ACTIVE	TSSOP	PW	16	90	Green (RoHS & no Sb/Br)	CU NIPDAU	Level-1-260C-UNLIM	0 to 70	MA3232C	Samples
MAX3232CPWR	ACTIVE	TSSOP	PW	16	2000	Green (RoHS & no Sb/Br)	CU NIPDAU	Level-1-260C-UNLIM	0 to 70	MA3232C	Samples
MAX3232CPWRE4	ACTIVE	TSSOP	PW	16	2000	Green (RoHS & no Sb/Br)	CU NIPDAU	Level-1-260C-UNLIM	0 to 70	MA3232C	Samples
MAX3232CPWRG4	ACTIVE	TSSOP	PW	16	2000	Green (RoHS & no Sb/Br)	CU NIPDAU	Level-1-260C-UNLIM	0 to 70	MA3232C	Samples
MAX3232ID	ACTIVE	SOIC	D	16	40	Green (RoHS & no Sb/Br)	CU NIPDAU	Level-1-260C-UNLIM	-40 to 85	MAX3232I	Samples
MAX3232IDB	ACTIVE	SSOP	DB	16	80	Green (RoHS & no Sb/Br)	CU NIPDAU	Level-1-260C-UNLIM	-40 to 85	MB3232I	Samples
MAX3232IDBE4	ACTIVE	SSOP	DB	16	80	Green (RoHS & no Sb/Br)	CU NIPDAU	Level-1-260C-UNLIM	-40 to 85	MB3232I	Samples
MAX3232IDBG4	ACTIVE	SSOP	DB	16	80	Green (RoHS & no Sb/Br)	CU NIPDAU	Level-1-260C-UNLIM	-40 to 85	MB3232I	Samples
MAX3232IDBR	ACTIVE	SSOP	DB	16	2000	Green (RoHS & no Sb/Br)	CU NIPDAU	Level-1-260C-UNLIM	-40 to 85	MB3232I	Samples
MAX3232IDBRE4	ACTIVE	SSOP	DB	16	2000	Green (RoHS & no Sb/Br)	CU NIPDAU	Level-1-260C-UNLIM	-40 to 85	MB3232I	Samples
MAX3232IDBRG4	ACTIVE	SSOP	DB	16	2000	Green (RoHS & no Sb/Br)	CU NIPDAU	Level-1-260C-UNLIM	-40 to 85	MB3232I	Samples
MAX3232IDE4	ACTIVE	SOIC	D	16	40	Green (RoHS & no Sb/Br)	CU NIPDAU	Level-1-260C-UNLIM	-40 to 85	MAX3232I	Samples
MAX3232IDG4	ACTIVE	SOIC	D	16	40	Green (RoHS & no Sb/Br)	CU NIPDAU	Level-1-260C-UNLIM	-40 to 85	MAX3232I	Samples
MAX3232IDR	ACTIVE	SOIC	D	16	2500	Green (RoHS & no Sb/Br)	CU NIPDAU	Level-1-260C-UNLIM	-40 to 85	MAX3232I	Samples
MAX3232IDRE4	ACTIVE	SOIC	D	16	2500	Green (RoHS & no Sb/Br)	CU NIPDAU	Level-1-260C-UNLIM	-40 to 85	MAX3232I	Samples
MAX3232IDRG4	ACTIVE	SOIC	D	16	2500	Green (RoHS & no Sb/Br)	CU NIPDAU	Level-1-260C-UNLIM	-40 to 85	MAX3232I	Samples

Orderable Device	Status (1)	Package Type	Package Drawing	Pins	Package Qty	Eco Plan (2)	Lead/Ball Finish	MSL Peak Temp (3)	Op Temp (°C)	Top-Side Markings (4)	Samples
MAX3232IDW	ACTIVE	SOIC	DW	16	40	Green (RoHS & no Sb/Br)	CU NIPDAU	Level-1-260C-UNLIM	-40 to 85	MAX3232I	Samples
MAX3232IDWE4	ACTIVE	SOIC	DW	16	40	Green (RoHS & no Sb/Br)	CU NIPDAU	Level-1-260C-UNLIM	-40 to 85	MAX3232I	Samples
MAX3232IDWG4	ACTIVE	SOIC	DW	16	40	Green (RoHS & no Sb/Br)	CU NIPDAU	Level-1-260C-UNLIM	-40 to 85	MAX3232I	Samples
MAX3232IDWR	ACTIVE	SOIC	DW	16	2000	Green (RoHS & no Sb/Br)	CU NIPDAU	Level-1-260C-UNLIM	-40 to 85	MAX3232I	Samples
MAX3232IDWRE4	ACTIVE	SOIC	DW	16	2000	Green (RoHS & no Sb/Br)	CU NIPDAU	Level-1-260C-UNLIM	-40 to 85	MAX3232I	Samples
MAX3232IDWRG4	ACTIVE	SOIC	DW	16	2000	Green (RoHS & no Sb/Br)	CU NIPDAU	Level-1-260C-UNLIM	-40 to 85	MAX3232I	Samples
MAX3232IPW	ACTIVE	TSSOP	PW	16	90	Green (RoHS & no Sb/Br)	CU NIPDAU	Level-1-260C-UNLIM	-40 to 85	MB3232I	Samples
MAX3232IPWE4	ACTIVE	TSSOP	PW	16	90	Green (RoHS & no Sb/Br)	CU NIPDAU	Level-1-260C-UNLIM	-40 to 85	MB3232I	Samples
MAX3232IPWG4	ACTIVE	TSSOP	PW	16	90	Green (RoHS & no Sb/Br)	CU NIPDAU	Level-1-260C-UNLIM	-40 to 85	MB3232I	Samples
MAX3232IPWR	ACTIVE	TSSOP	PW	16	2000	Green (RoHS & no Sb/Br)	CU NIPDAU	Level-1-260C-UNLIM	-40 to 85	MB3232I	Samples
MAX3232IPWRE4	ACTIVE	TSSOP	PW	16	2000	Green (RoHS & no Sb/Br)	CU NIPDAU	Level-1-260C-UNLIM	-40 to 85	MB3232I	Samples
MAX3232IPWRG4	ACTIVE	TSSOP	PW	16	2000	Green (RoHS & no Sb/Br)	CU NIPDAU	Level-1-260C-UNLIM	-40 to 85	MB3232I	Samples
SN003232CPWR	ACTIVE	TSSOP	PW	16	2000	Green (RoHS & no Sb/Br)	CU NIPDAU	Level-1-260C-UNLIM	0 to 70	MA3232C	Samples

(1) The marketing status values are defined as follows:
ACTIVE: Product device recommended for new designs.
LIFEBUY: TI has announced that the device will be discontinued, and a lifetime-buy period is in effect.
NRND: Not recommended for new designs. Device is in production to support existing customers, but TI does not recommend using this part in a new design.
PREVIEW: Device has been announced but is not in production. Samples may or may not be available.
OBSOLETE: TI has discontinued the production of the device.

(2) Eco Plan - The planned eco-friendly classification: Pb-Free (RoHS), Pb-Free (RoHS Exempt), or Green (RoHS & no Sb/Br) - please check http://www.ti.com/productcontent for the latest availability information and additional product content details.
TBD: The Pb-Free/Green conversion plan has not been defined.

Pb-Free (RoHS): TI's terms "Lead-Free" or "Pb-Free" mean semiconductor products that are compatible with the current RoHS requirements for all 6 substances, including the requirement that lead not exceed 0.1% by weight in homogeneous materials. Where designed to be soldered at high temperatures, TI Pb-Free products are suitable for use in specified lead-free processes.
Pb-Free (RoHS Exempt): This component has a RoHS exemption for either 1) lead-based flip-chip solder bumps used between the die and package, or 2) lead-based die adhesive used between the die and leadframe. The component is otherwise considered Pb-Free (RoHS compatible) as defined above.
Green (RoHS & no Sb/Br): TI defines "Green" to mean Pb-Free (RoHS compatible), and free of Bromine (Br) and Antimony (Sb) based flame retardants (Br or Sb do not exceed 0.1% by weight in homogeneous material)

(3) MSL, Peak Temp. -- The Moisture Sensitivity Level rating according to the JEDEC industry standard classifications, and peak solder temperature.

(4) Multiple Top-Side Markings will be inside parentheses. Only one Top-Side Marking contained in parentheses and separated by a "~" will appear on a device. If a line is indented then it is a continuation of the previous line and the two combined represent the entire Top-Side Marking for that device.

Important Information and Disclaimer: The information provided on this page represents TI's knowledge and belief as of the date that it is provided. TI bases its knowledge and belief on information provided by third parties, and makes no representation or warranty as to the accuracy of such information. Efforts are underway to better integrate information from third parties. TI has taken and continues to take reasonable steps to provide representative and accurate information but may not have conducted destructive testing or chemical analysis on incoming materials and chemicals. TI and TI suppliers consider certain information to be proprietary, and thus CAS numbers and other limited information may not be available for release.

In no event shall TI's liability arising out of such information exceed the total purchase price of the TI part(s) at issue in this document sold by TI to Customer on an annual basis.

OTHER QUALIFIED VERSIONS OF MAX3232 :

- Enhanced Product: MAX3232-EP

NOTE: Qualified Version Definitions:

- Enhanced Product - Supports Defense, Aerospace and Medical Applications

TAPE AND REEL INFORMATION

REEL DIMENSIONS

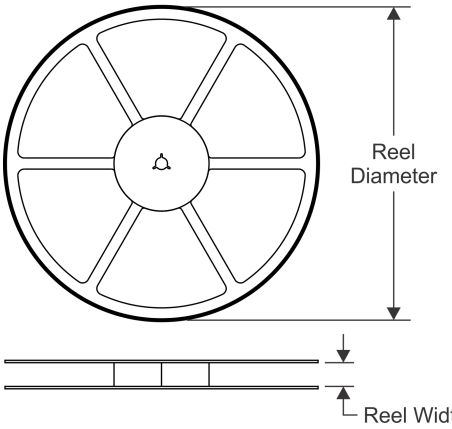

TAPE DIMENSIONS

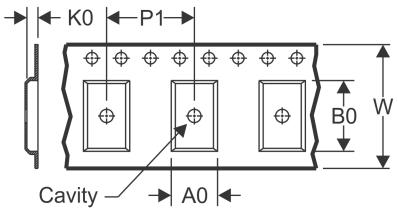

A0	Dimension designed to accommodate the component width
B0	Dimension designed to accommodate the component length
K0	Dimension designed to accommodate the component thickness
W	Overall width of the carrier tape
P1	Pitch between successive cavity centers

QUADRANT ASSIGNMENTS FOR PIN 1 ORIENTATION IN TAPE

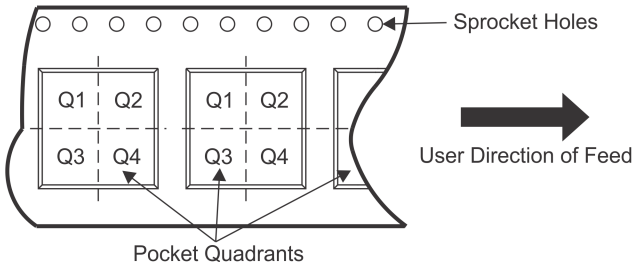

*All dimensions are nominal

Device	Package Type	Package Drawing	Pins	SPQ	Reel Diameter (mm)	Reel Width W1 (mm)	A0 (mm)	B0 (mm)	K0 (mm)	P1 (mm)	W (mm)	Pin1 Quadrant
MAX3232CDRG4	SOIC	D	16	2500	330.0	16.4	6.5	10.3	2.1	8.0	16.0	Q1
MAX3232CDWR	SOIC	DW	16	2000	330.0	16.4	10.75	10.7	2.7	12.0	16.0	Q1
MAX3232CDWRG4	SOIC	DW	16	2000	330.0	16.4	10.75	10.7	2.7	12.0	16.0	Q1
MAX3232CPWR	TSSOP	PW	16	2000	330.0	12.4	7.0	5.6	1.6	8.0	12.0	Q1
MAX3232CPWRG4	TSSOP	PW	16	2000	330.0	12.4	6.9	5.6	1.6	8.0	12.0	Q1
MAX3232IDBR	SSOP	DB	16	2000	330.0	16.4	8.2	6.6	2.5	12.0	16.0	Q1
MAX3232IDRG4	SOIC	D	16	2500	330.0	16.4	6.5	10.3	2.1	8.0	16.0	Q1
MAX3232IDWR	SOIC	DW	16	2000	330.0	16.4	10.75	10.7	2.7	12.0	16.0	Q1
MAX3232IDWRG4	SOIC	DW	16	2000	330.0	16.4	10.75	10.7	2.7	12.0	16.0	Q1
MAX3232IPWR	TSSOP	PW	16	2000	330.0	12.4	6.9	5.6	1.6	8.0	12.0	Q1

TAPE AND REEL BOX DIMENSIONS

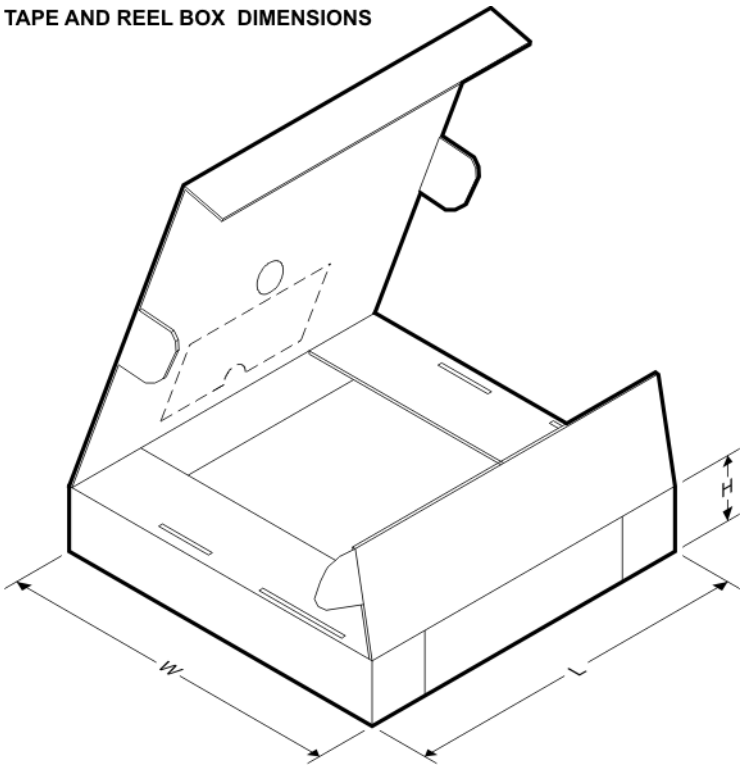

*All dimensions are nominal

Device	Package Type	Package Drawing	Pins	SPQ	Length (mm)	Width (mm)	Height (mm)
MAX3232CDRG4	SOIC	D	16	2500	333.2	345.9	28.6
MAX3232CDWR	SOIC	DW	16	2000	366.0	364.0	50.0
MAX3232CDWRG4	SOIC	DW	16	2000	367.0	367.0	38.0
MAX3232CPWR	TSSOP	PW	16	2000	364.0	364.0	27.0
MAX3232CPWRG4	TSSOP	PW	16	2000	367.0	367.0	35.0
MAX3232IDBR	SSOP	DB	16	2000	367.0	367.0	38.0
MAX3232IDRG4	SOIC	D	16	2500	333.2	345.9	28.6
MAX3232IDWR	SOIC	DW	16	2000	366.0	364.0	50.0
MAX3232IDWRG4	SOIC	DW	16	2000	367.0	367.0	38.0
MAX3232IPWR	TSSOP	PW	16	2000	367.0	367.0	35.0

D (R–PDSO–G16) PLASTIC SMALL OUTLINE

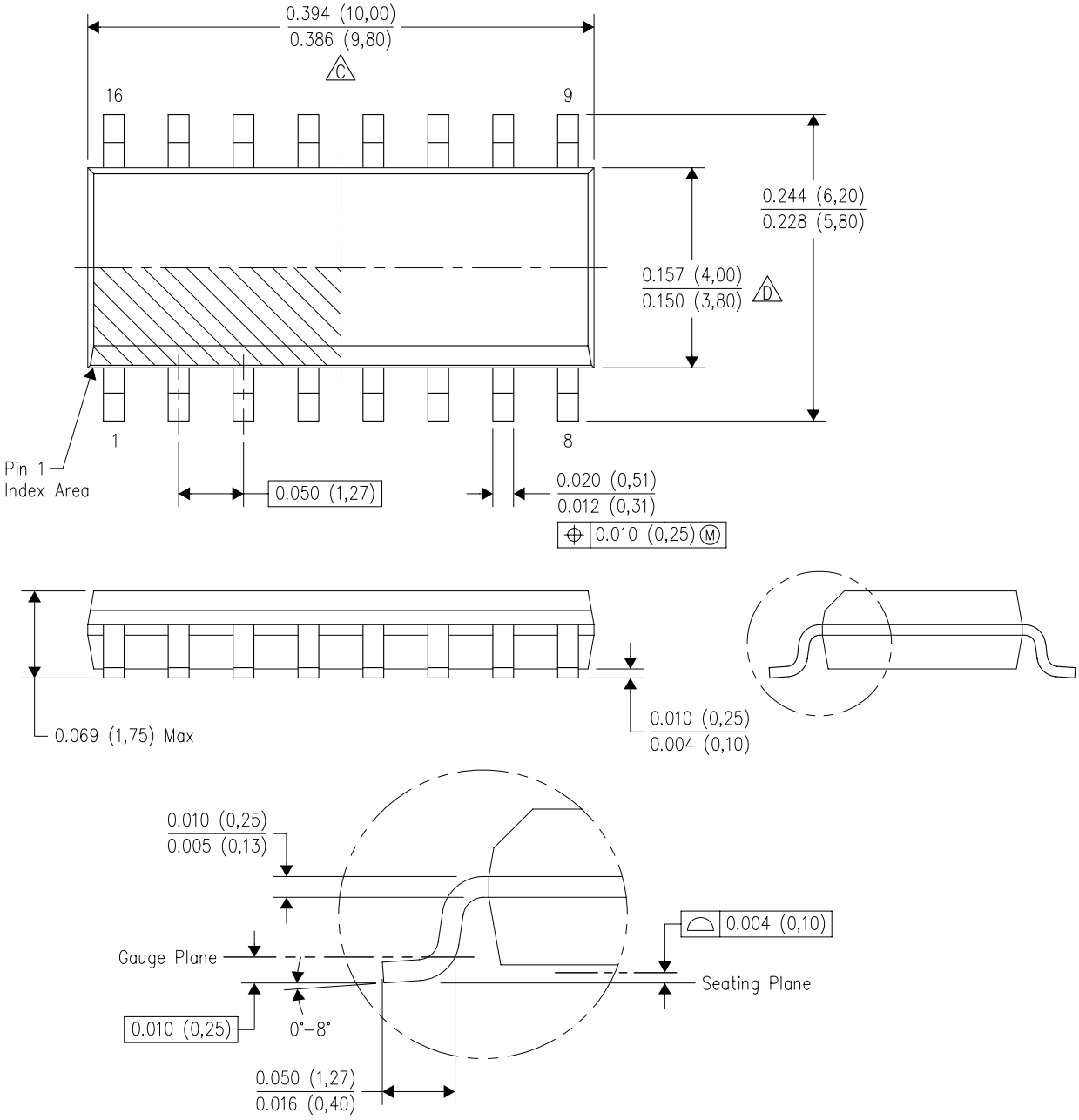

NOTES:
A. All linear dimensions are in inches (millimeters).
B. This drawing is subject to change without notice.
C. Body length does not include mold flash, protrusions, or gate burrs. Mold flash, protrusions, or gate burrs shall not exceed 0.006 (0,15) each side.
D. Body width does not include interlead flash. Interlead flash shall not exceed 0.017 (0,43) each side.
E. Reference JEDEC MS–012 variation AC.

D (R–PDSO–G16) PLASTIC SMALL OUTLINE

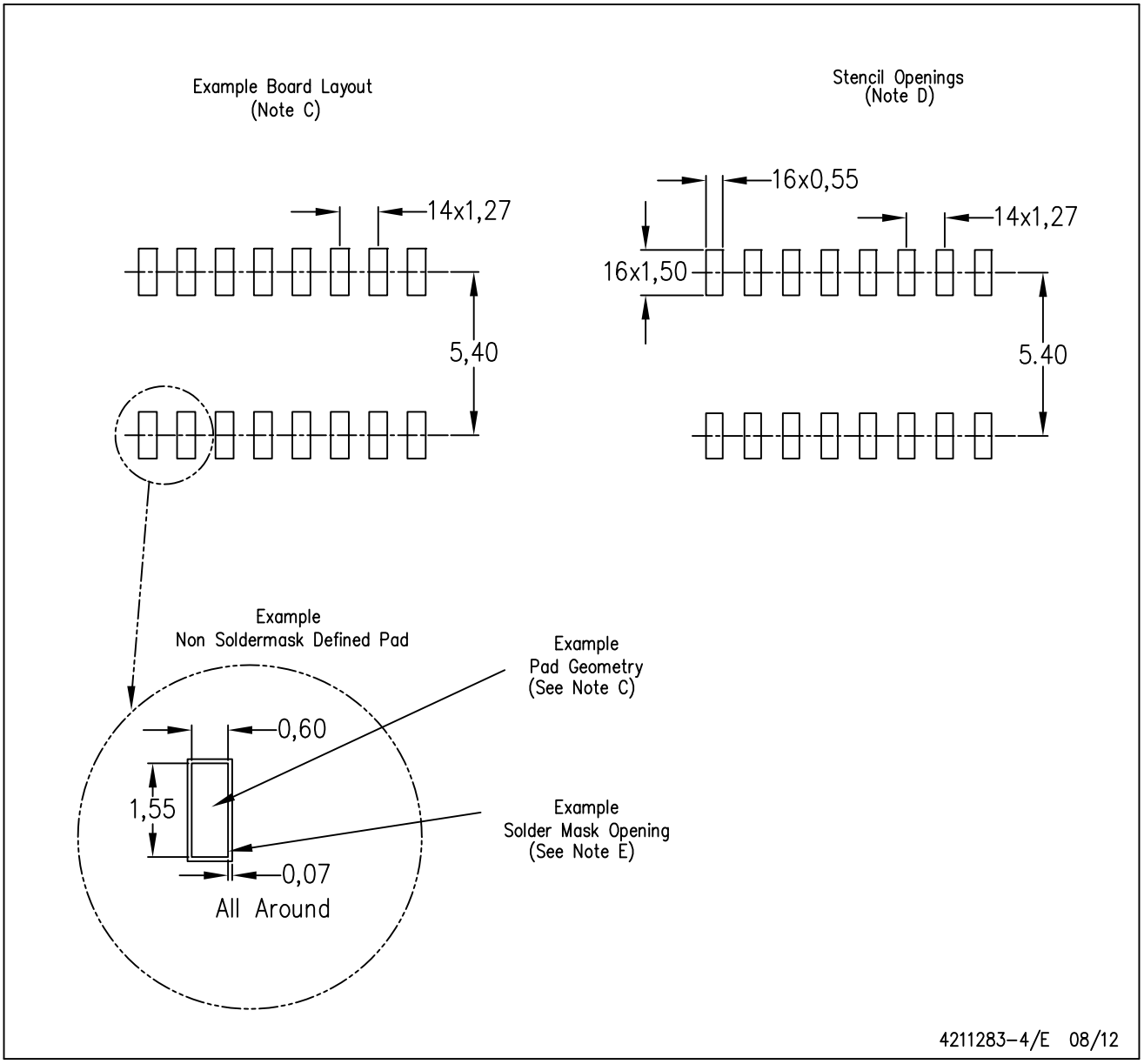

NOTES:
A. All linear dimensions are in millimeters.
B. This drawing is subject to change without notice.
C. Publication IPC–7351 is recommended for alternate designs.
D. Laser cutting apertures with trapezoidal walls and also rounding corners will offer better paste release. Customers should contact their board assembly site for stencil design recommendations. Refer to IPC–7525 for other stencil recommendations.
E. Customers should contact their board fabrication site for solder mask tolerances between and around signal pads.

PW (R–PDSO–G16) PLASTIC SMALL OUTLINE

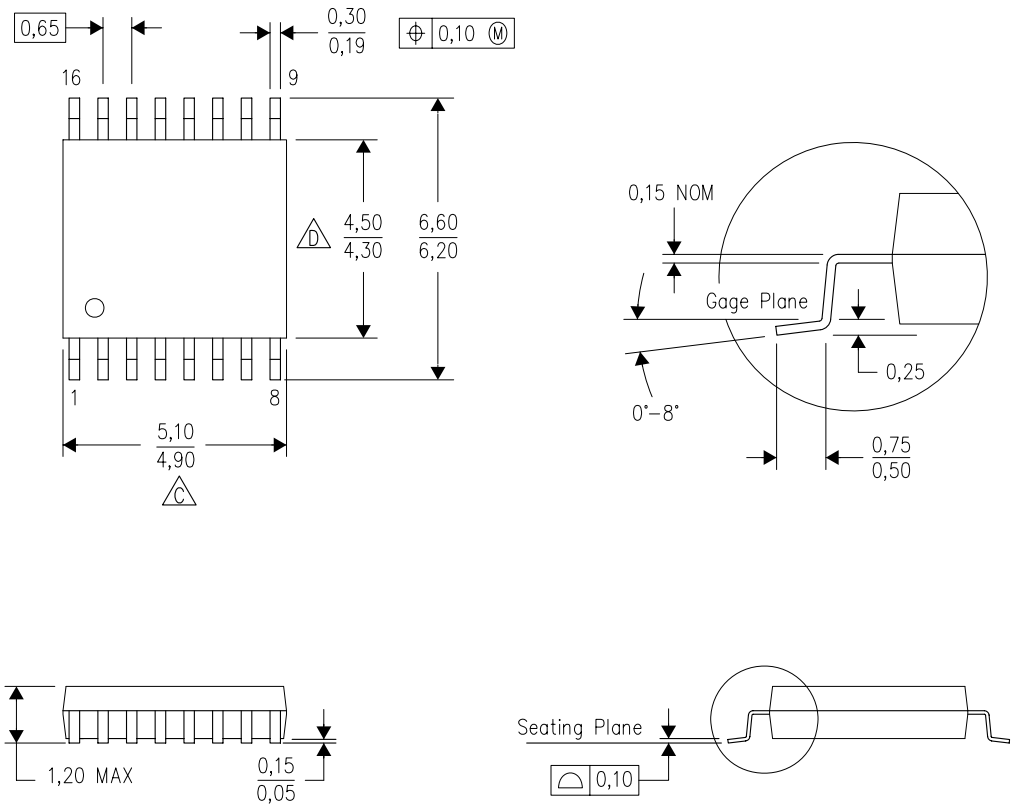

4040064–4/G 02/11

NOTES:
A. All linear dimensions are in millimeters. Dimensioning and tolerancing per ASME Y14.5M–1994.
B. This drawing is subject to change without notice.
C. Body length does not include mold flash, protrusions, or gate burrs. Mold flash, protrusions, or gate burrs shall not exceed 0,15 each side.
D. Body width does not include interlead flash. Interlead flash shall not exceed 0,25 each side.
E. Falls within JEDEC MO–153

PW (R–PDSO–G16) PLASTIC SMALL OUTLINE

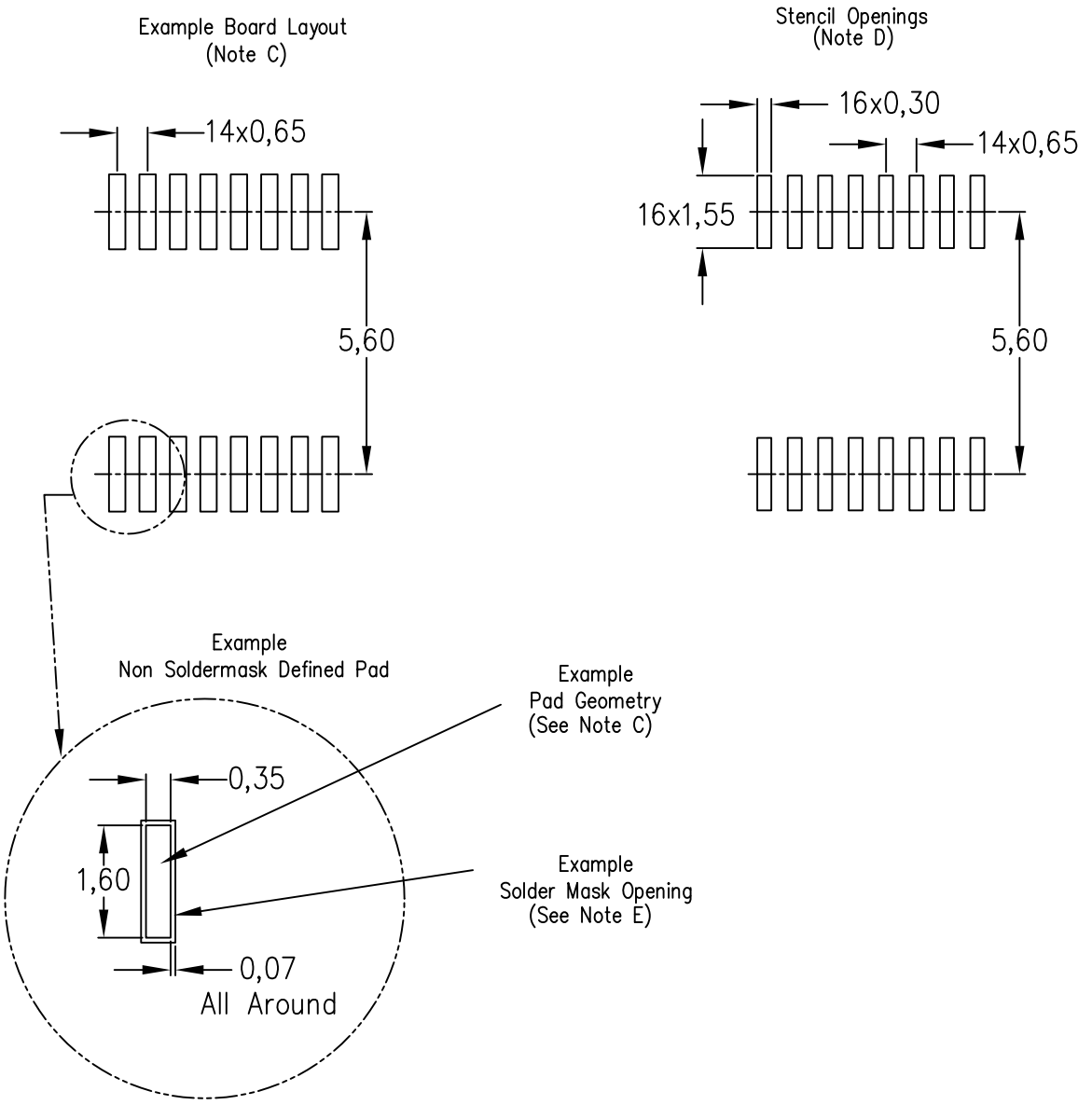

NOTES:
A. All linear dimensions are in millimeters.
B. This drawing is subject to change without notice.
C. Publication IPC–7351 is recommended for alternate designs.
D. Laser cutting apertures with trapezoidal walls and also rounding corners will offer better paste release. Customers should contact their board assembly site for stencil design recommendations. Refer to IPC–7525 for other stencil recommendations.
E. Customers should contact their board fabrication site for solder mask tolerances between and around signal pads.

DW (R–PDSO–G16) PLASTIC SMALL OUTLINE

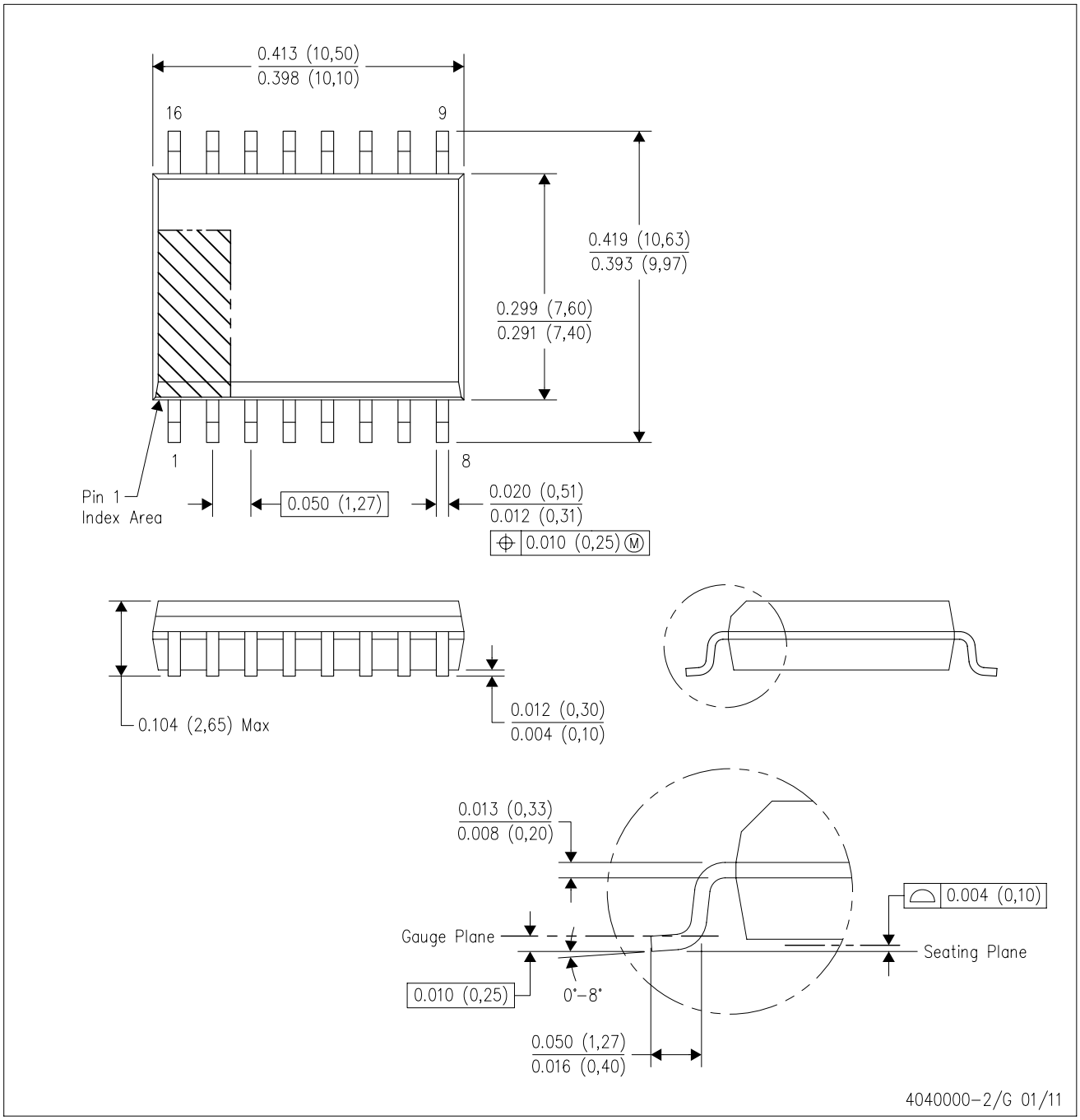

NOTES:
A. All linear dimensions are in inches (millimeters). Dimensioning and tolerancing per ASME Y14.5M–1994.
B. This drawing is subject to change without notice.
C. Body dimensions do not include mold flash or protrusion not to exceed 0.006 (0,15).
D. Falls within JEDEC MS–013 variation AA.

DW (R–PDSO–G16) PLASTIC SMALL OUTLINE

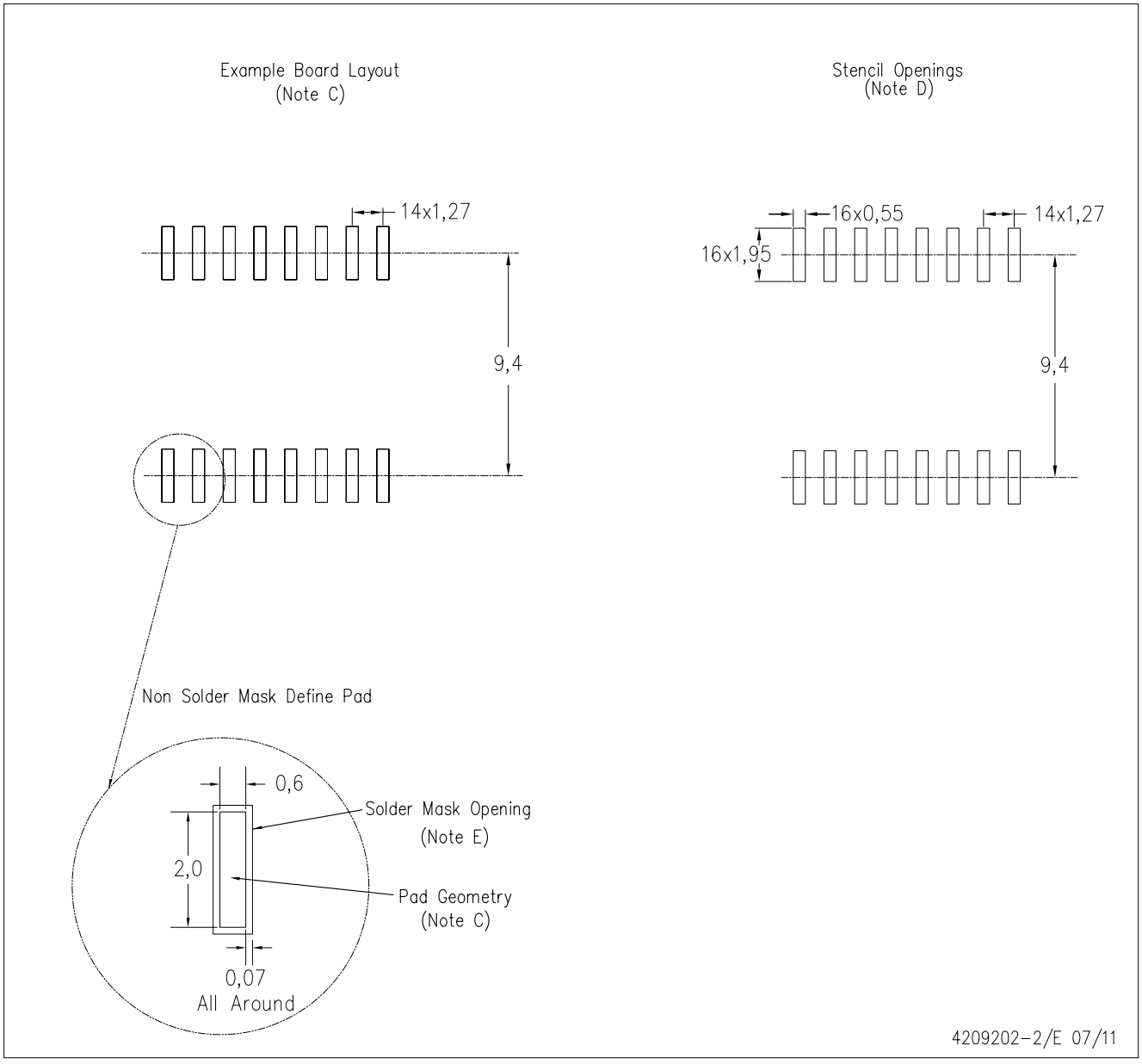

NOTES:
A. All linear dimensions are in millimeters.
B. This drawing is subject to change without notice.
C. Refer to IPC7351 for alternate board design.
D. Laser cutting apertures with trapezoidal walls and also rounding corners will offer better paste release. Customers should contact their board assembly site for stencil design recommendations. Refer to IPC–7525
E. Customers should contact their board fabrication site for solder mask tolerances between and around signal pads.

MSSO002E – JANUARY 1995 – REVISED DECEMBER 2001

DB (R-PDSO-G)** **PLASTIC SMALL-OUTLINE**

28 PINS SHOWN

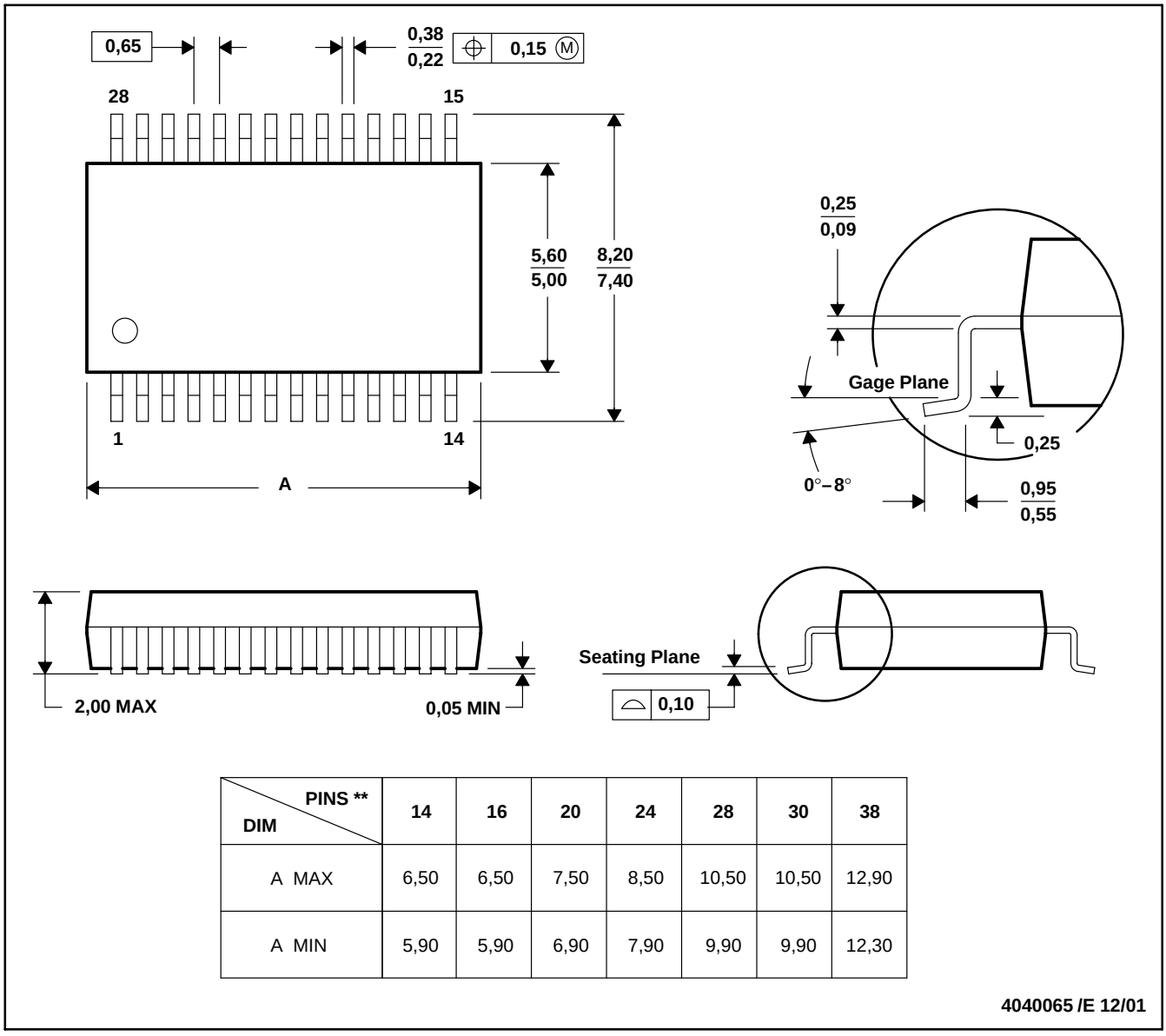

DIM \ PINS **	14	16	20	24	28	30	38
A MAX	6,50	6,50	7,50	8,50	10,50	10,50	12,90
A MIN	5,90	5,90	6,90	7,90	9,90	9,90	12,30

4040065 /E 12/01

NOTES: A. All linear dimensions are in millimeters.
B. This drawing is subject to change without notice.
C. Body dimensions do not include mold flash or protrusion not to exceed 0,15.
D. Falls within JEDEC MO-150

IMPORTANT NOTICE

Texas Instruments Incorporated and its subsidiaries (TI) reserve the right to make corrections, enhancements, improvements and other changes to its semiconductor products and services per JESD46, latest issue, and to discontinue any product or service per JESD48, latest issue. Buyers should obtain the latest relevant information before placing orders and should verify that such information is current and complete. All semiconductor products (also referred to herein as “components”) are sold subject to TI’s terms and conditions of sale supplied at the time of order acknowledgment.

TI warrants performance of its components to the specifications applicable at the time of sale, in accordance with the warranty in TI’s terms and conditions of sale of semiconductor products. Testing and other quality control techniques are used to the extent TI deems necessary to support this warranty. Except where mandated by applicable law, testing of all parameters of each component is not necessarily performed.

TI assumes no liability for applications assistance or the design of Buyers’ products. Buyers are responsible for their products and applications using TI components. To minimize the risks associated with Buyers’ products and applications, Buyers should provide adequate design and operating safeguards.

TI does not warrant or represent that any license, either express or implied, is granted under any patent right, copyright, mask work right, or other intellectual property right relating to any combination, machine, or process in which TI components or services are used. Information published by TI regarding third-party products or services does not constitute a license to use such products or services or a warranty or endorsement thereof. Use of such information may require a license from a third party under the patents or other intellectual property of the third party, or a license from TI under the patents or other intellectual property of TI.

Reproduction of significant portions of TI information in TI data books or data sheets is permissible only if reproduction is without alteration and is accompanied by all associated warranties, conditions, limitations, and notices. TI is not responsible or liable for such altered documentation. Information of third parties may be subject to additional restrictions.

Resale of TI components or services with statements different from or beyond the parameters stated by TI for that component or service voids all express and any implied warranties for the associated TI component or service and is an unfair and deceptive business practice. TI is not responsible or liable for any such statements.

Buyer acknowledges and agrees that it is solely responsible for compliance with all legal, regulatory and safety-related requirements concerning its products, and any use of TI components in its applications, notwithstanding any applications-related information or support that may be provided by TI. Buyer represents and agrees that it has all the necessary expertise to create and implement safeguards which anticipate dangerous consequences of failures, monitor failures and their consequences, lessen the likelihood of failures that might cause harm and take appropriate remedial actions. Buyer will fully indemnify TI and its representatives against any damages arising out of the use of any TI components in safety-critical applications.

In some cases, TI components may be promoted specifically to facilitate safety-related applications. With such components, TI’s goal is to help enable customers to design and create their own end-product solutions that meet applicable functional safety standards and requirements. Nonetheless, such components are subject to these terms.

No TI components are authorized for use in FDA Class III (or similar life-critical medical equipment) unless authorized officers of the parties have executed a special agreement specifically governing such use.

Only those TI components which TI has specifically designated as military grade or “enhanced plastic” are designed and intended for use in military/aerospace applications or environments. Buyer acknowledges and agrees that any military or aerospace use of TI components which have ***not*** been so designated is solely at the Buyer's risk, and that Buyer is solely responsible for compliance with all legal and regulatory requirements in connection with such use.

TI has specifically designated certain components as meeting ISO/TS16949 requirements, mainly for automotive use. In any case of use of non-designated products, TI will not be responsible for any failure to meet ISO/TS16949.

Products		**Applications**	
Audio	www.ti.com/audio	Automotive and Transportation	www.ti.com/automotive
Amplifiers	amplifier.ti.com	Communications and Telecom	www.ti.com/communications
Data Converters	dataconverter.ti.com	Computers and Peripherals	www.ti.com/computers
DLP® Products	www.dlp.com	Consumer Electronics	www.ti.com/consumer-apps
DSP	dsp.ti.com	Energy and Lighting	www.ti.com/energy
Clocks and Timers	www.ti.com/clocks	Industrial	www.ti.com/industrial
Interface	interface.ti.com	Medical	www.ti.com/medical
Logic	logic.ti.com	Security	www.ti.com/security
Power Mgmt	power.ti.com	Space, Avionics and Defense	www.ti.com/space-avionics-defense
Microcontrollers	microcontroller.ti.com	Video and Imaging	www.ti.com/video
RFID	www.ti-rfid.com		
OMAP Applications Processors	www.ti.com/omap	**TI E2E Community**	e2e.ti.com
Wireless Connectivity	www.ti.com/wirelessconnectivity		

Mailing Address: Texas Instruments, Post Office Box 655303, Dallas, Texas 75265
Copyright © 2013, Texas Instruments Incorporated