DATASHEET

Type	Antenna
Frequencies	AMPS (824-894 MHz) ISM (868 MHz) GSM (900 MHz) DCS (1800 MHz) PCS (1900 MHz) 3G (UMTS 2.1 GHz) WIFI / BLUETOOTH (2.4 GHz)
Mounting	Body Mount
Part No.	**2J610B**
Revision	00



Contents

1. SPECIFICATION 2
1.1. Electrical Specifications 2
1.2. Connection Specifications 2
1.2.1. Default (recommended) 2
1.2.2. Optional 2
1.3. Mechanical Specifications and Dimensions 3
1.3.1. Mounting Type 3
1.3.2. Body mount 3
2. MEASUREMENT 4
3. IMAGES 5

1. SPECIFICATION

1.1. Electrical Specifications

Frequencies	AMPS (824-894 MHz) ISM (868 MHz) GSM (900 MHz) DCS (1800 MHz) PCS (1900 MHz) 3G (UMTS 2.1 GHz) WIFI / BLUETOOTH (2.4 GHz)
Impedance	50 Ohms
Polarization	Horizontal
Gain	2.14 dBi Max.
VSWR	<2:1
Power handling	50W
Operating temperature	-40°C to +85°C

1.2. Connection Specifications

1.2.1. Default (recommended)

Connector type: FME female
Cable: RG174U
Cable length: 30 cm

1.2.2. Optional

Suitable cables: RG174, RG316
Cable length: min. 250 cm
Suitable connectors: All connectors suitable for cables above

1.3. Mechanical Specifications and Dimensions

1.3.1. Mounting Type

- Body Mount

1.3.2. Body mount

Material:	ABS
Max. dimensions:	22.3mm x 80.5mm x 75.5mm
Weight:	95 g ‘counted with default connection’
Colour:	Black (for different colours please ask our sales team)

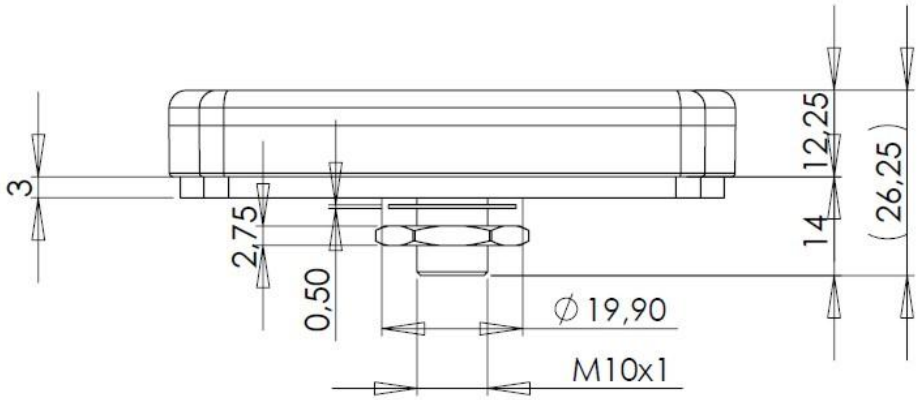

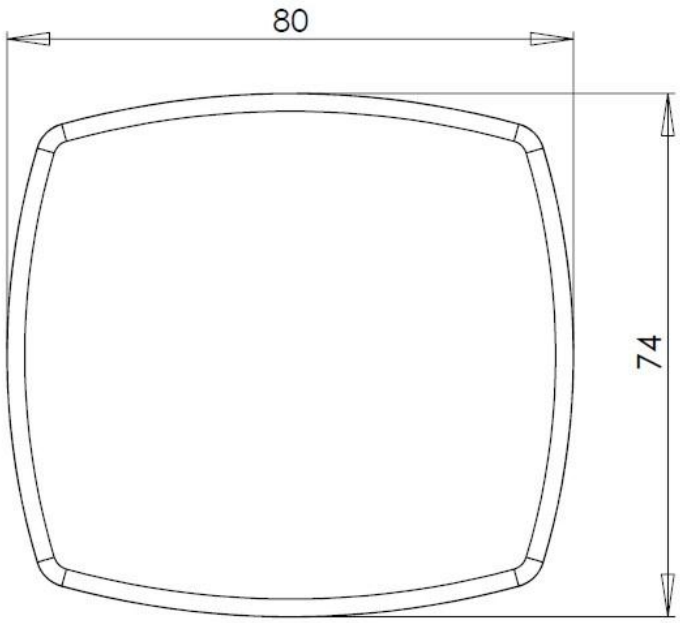

2. MEASUREMENT

VSWR (Quad Band)

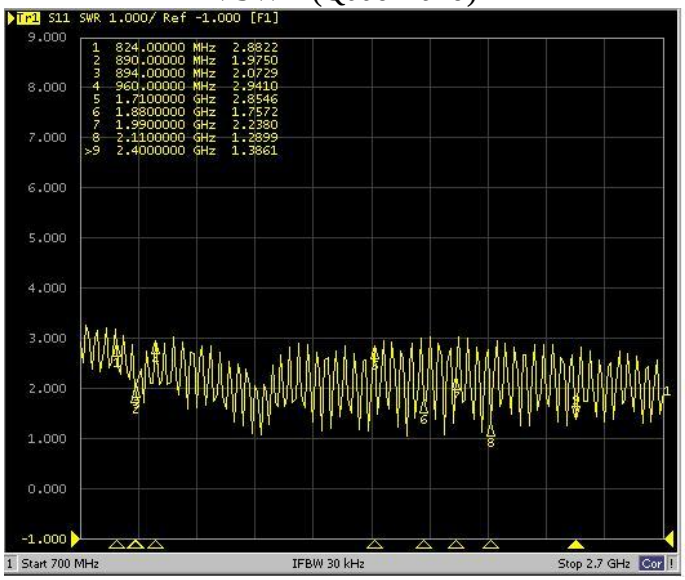

Tested with 3m cable length

Log Mag (Quad Band)

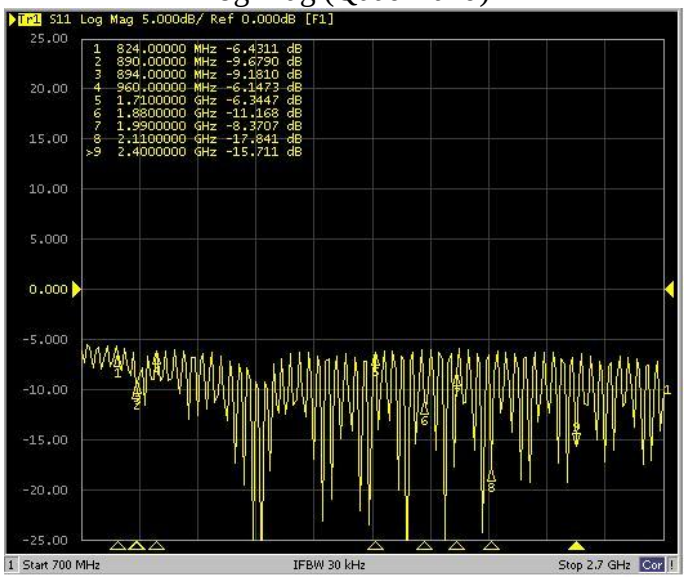

Tested with 3m cable length

VSWR (Quad Band)

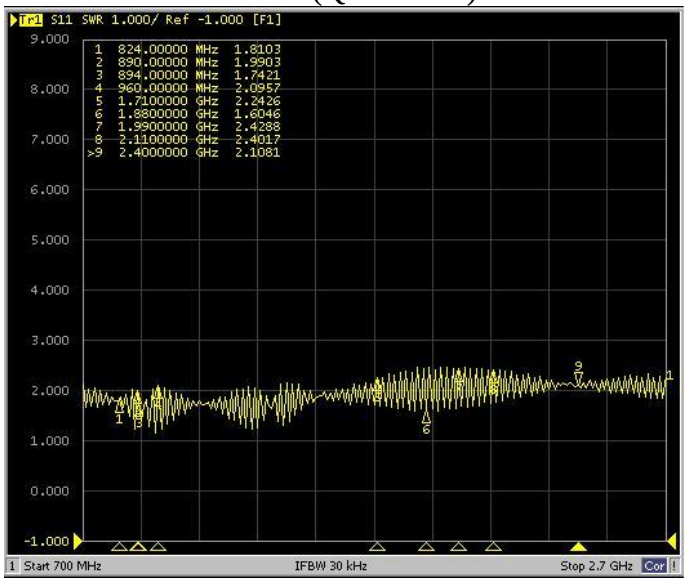

Tested with 5m cable length

Log Mag (Quad Band)

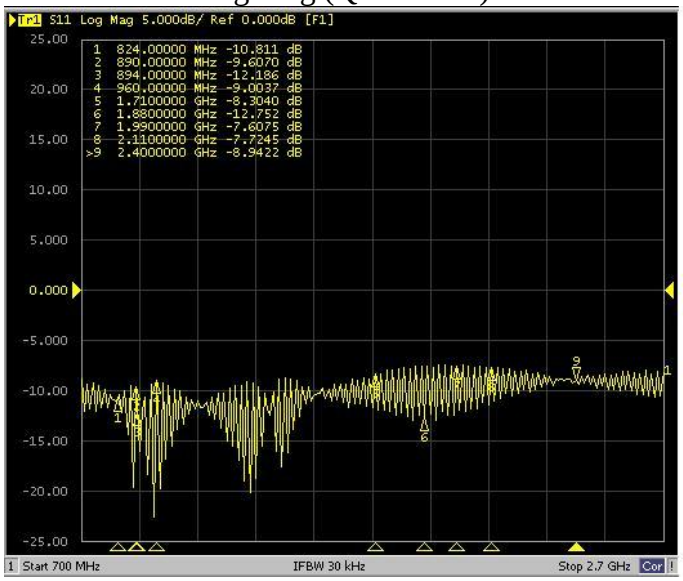

Tested with 5m cable length

3. IMAGES



