THIS DRAWING IS UNPUBLISHED
VERTRAULICHE UNVEROEFFENTLICHE ZEICHNUNG
RELEASE FOR PUBLIKATION ,2000
FREI FUER VEROEFFENTLICHUNG
© COPYRIGHT 2000 BY AMP INCORPORATED ALL RIGHTS RESERVED
ALLE RECHTE VORBEHALTEN

MATED WITH:
PASSEND ZU:
HA.3/4

LOC	DIST
AI	-

REVISIONS
AENDERUNGEN

P	LTR	DESCRIPTION BESCHREIBUNG	DATE	DWN	APVD
C2		TEXT CHANGED ECR-07-020917	03.09.2007	SR	ST

PROJEKT NR. -

CONTACT ARRANGEMENT
VIEW FROM CONECTING SIDE

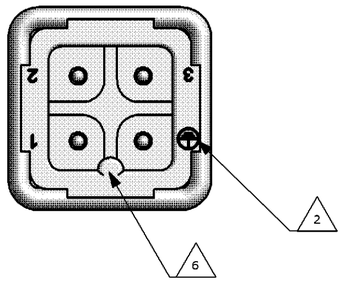

LATERAL PRINT
PN 1-1 / 0-2

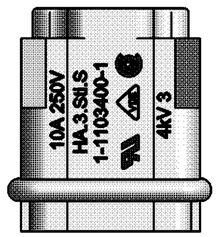

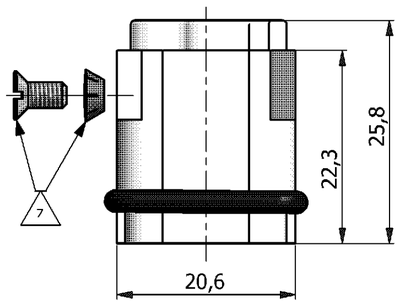

LATERAL PRINT
PN 0-1

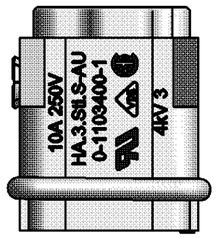

LATERAL PRINT
PN 0-3

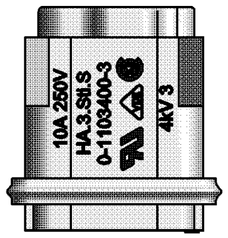

NOTES

1 CONTACT: 1 TO 3
SUITABLE SCREW CONTACTS: SERIES HA.3
OUTER DIMENSIONS OF INSULATION: MAX. Ø3,4 MM

△2 GROUNDING CONTACT:
SUITABLE SCREW CONTACTS: SERIES HA.3
OUTER DIMENSIONS OF INSULATION: MAX. Ø3,4 MM

3 SUITABLE HOOD SIZE 1: SERIES HA; HD; EMV AND HIP

4 SUITABLE INSERTION AND EXTRACTION TOOL:
SCREWDRIVER 2,0x65

5 STANDARDS:
DIN EN 61984; DIN EN 60664-1

△6 POLARIZATION RIPS

△7 POS. 8 AND POS.9 PACKED SEPARATE IN POLY BAG

8 AUTHORIZATION: UL; CSA; VDE; SEV

△9 PACKAGING:
10 SETS IN A CARTON, PRE-MOUNTED

△10 PACKAGING
200 PIECES IN A KANN-BAN BOT

CONTACT ARRANGEMENT
VIEW FROM TERMINATION SIDE

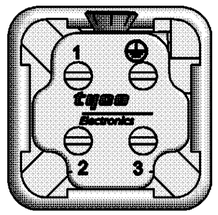

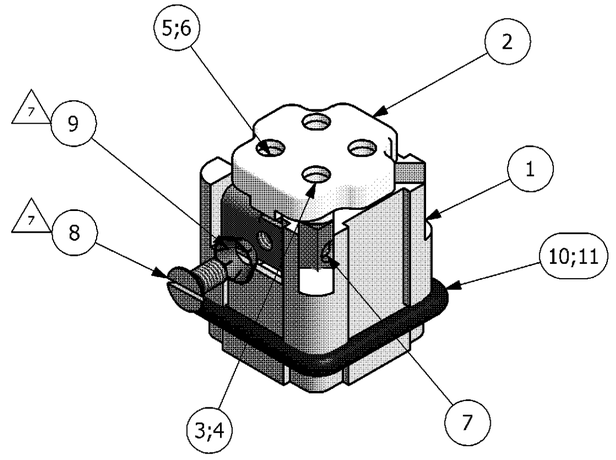

1				PROFILE SEAL	NEOPRENE		BLACK	11	CONDUCTIVE
	1	1	1	PROFILE SEAL	NEOPRENE		BLACK	10	
	1	1	1	SPRING WASHER	STEEL	ZINK PLATED		9	V3.2
	1	1	1	SLOTED COUNTER FLAT HEAD SCREW	STEEL	ZINK PLATED		8	M3x6
4	4	4	4	SLOTED CHEESE HEAD SCREW	BRASS	NICKEL PLATED		7	M3x5.5
		1		EARTING CONTACT PIN WITH ANGLE	BRASS	GOLD PLATED		6	
1	1		1	EARTING CONTACT PIN WITH ANGLE	BRASS	SILVER PLATED		5	
		3		CONTACT PIN	BRASS	GOLD PLATED		4	
3	3		3	CONTACT PIN	BRASS	SILVER PLATED		3	
1	1	1	1	COVER	PC		BEIGE	2	
1	1	1	1	MALE INSERT	PC		BEIGE	1	
0-3	0-2	0-1	1-1	DESCRIPTION	MATERIAL	SURFACE	COLOR	ITEM	NOTES
				HA.3.Sti.S △9					
				HA.3.Sti.S-AU △8					
				HA.3.Sti.S-KM △10					
				HA.3.Sti.S △9					

THIS DRAWING IS A CONTROLLED DOCUMENT FOR AMP INCORPORATED. IT IS SUBJECT TO CHANGE AND THE CONTROLLING ENGINEERING ORGANIZATION SHOULD BE CONTACTED FOR THE LATEST REVISION.
DIESES ZEICHNUNGSDOKUMENT WIRD DURCH AMP INCORPORATED KONTROLLIERT. AENDERUNGEN LIEGT DER TECHNISCHEN KONTAKTSTELLE DIESEN STAND FORMELDEN. DEN JEWEILS LETZTGUELTIGEN AENDERUNGSSTAND ERFAHREN SIE AUF ANFRAGE.

DIMENSIONS:
DIMENSIONEN:
mm

TOLERANCES UNLESS OTHERWISE SPECIFIED:
ALLGEMEINTOLERANZEN
n. ISO 8015 -
n. ISO 2768 - mH-E
n. DIN 16901- 140
0 PLC #
1 PLC #
2 PLC #
3 PLC #
ANGLES / WINKEL #

MATERIAL

FINISH / OBERFLAECHE / FARBE

DWN	SCHNEIDER	24.09.1999
CHK	KRAMER	24.09.1999
APVD	T.SCHNURPFEIL	27.03.2006
PRODUCT SPEC. PRODUKTSPEZ.	108-74055	
APPLICATION SPEC. VERARBEITUNGSSPEZ.	114-74056	
WEIGHT GEWICHT	0,0012 KG	

tyco Electronics
Tyco / Electronics AMP GmbH
D - 53819 Neunkirchen

NAME
MALE INSERT
HA.3.STI.S

SIZE	CAGE CODE	DRAWING NO ZEICHNUNGS-NR.	RESTRICTED TO NUR FUER
A2	00779	C- 1103400	

CUSTOMER DRAWING / KUNDENZEICHNUNG

SCALE MASSSTAB	SHEET BLATT	OF VON	REV.
1:1	1	1	C2

This is a TRANSLATED file from
Computervision, Inc., Medusa Revision 12.2.5T