Aluminum Capacitors
Axial Standard Miniature



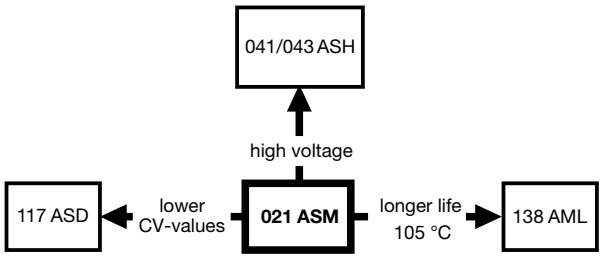

Fig. 1

FEATURES

- Long useful life: 2500 h to 8000 h at 85 °C
- Miniaturized, high CV-product per unit volume
- Charge and discharge proof
- Taped versions up to case Ø 15 mm x 30 mm available for automatic insertion
- Polarized aluminum electrolytic capacitors, non-solid electrolyte
- Axial leads, cylindrical aluminum case, insulated with a blue sleeve
- Mounting ring version not available in insulated form
- Material categorization: For definitions of compliance please see www.vishay.com/doc?99912

Pb-free

RoHS COMPLIANT

APPLICATIONS

- General purpose, industrial, automotive, audio-video
- Coupling, decoupling, smoothing, filtering, buffering
- Portable and mobile equipment (small size, low mass)
- Low mounting height boards, vibration and shock resistant

MARKING

The capacitors are marked (where possible) with the following information:

- Rated capacitance (in µF)
- Tolerance on rated capacitance, code letter in accordance with IEC 60062 (M for ± 20 %)
- Rated voltage (in V)
- Upper category temperature (85 °C)
- Date code in accordance with IEC 60062
- Code for factory of origin
- Name of manufacturer
- Negative terminal identification
- Series number (021)

QUICK REFERENCE DATA

DESCRIPTION	VALUE	
Nominal case sizes (Ø D x L in mm)	4.5 x 10 to 10 x 25	10 x 30 to 21 x 38
Rated capacitance range, C_R	1 µF to 15 000 µF	
Tolerance on C_R	± 20 %	
Rated voltage range, U_R	6.3 V to 100 V	
Category temperature range	- 40 °C to + 85 °C	
Endurance test at 85 °C: U_R = 6.3 V to 25 V U_R = 40 V to 100 V	 1000 h 2000 h	 5000 h 5000 h
Endurance test at 105 °C	-	2000 h
Useful life at 85 °C	2500 h	8000 h
Useful life at 40 °C, 1.4 x I_R applied	70 000 h	200 000 h
Shelf life at 0 V, 85 °C	500 h	
Based on sectional specification	IEC 60384-4/EN 130300	
Climatic category IEC 60068	40/085/56	

SELECTION CHART FOR C_R, U_R, AND RELEVANT NOMINAL CASE SIZES (Ø D x L in mm)

C_R (µF)	U_R (V)						
	6.3	10	16	25	40	63	100
1.0	-	-	-	-	-	4.5 x 10	4.5 x 10
2.2	-	-	-	-	-	4.5 x 10	4.5 x 10
3.3	-	-	-	-	-	4.5 x 10	-
4.7	-	-	-	-	-	4.5 x 10	4.5 x 10
10	-	-	-	-	-	4.5 x 10	6 x 10
15	-	-	-	-	-	4.5 x 10	8 x 11
	-	-	-	-	-	-	6.5 x 18
22	-	-	-	-	4.5 x 10	6 x 10	8 x 11
	-	-	-	-	-	-	6.5 x 18
33	-	-	-	-	-	6 x 10	6.5 x 18
47	-	-	-	4.5 x 10	6 x 10	8 x 11	8 x 18
	-	-	-	-	-	6.5 x 18	-

For technical questions, contact: aluminumcaps1@vishay.com

THIS DOCUMENT IS SUBJECT TO CHANGE WITHOUT NOTICE. THE PRODUCTS DESCRIBED HEREIN AND THIS DOCUMENT ARE SUBJECT TO SPECIFIC DISCLAIMERS, SET FORTH AT www.vishay.com/doc?91000

SELECTION CHART FOR C_R, U_R, AND RELEVANT NOMINAL CASE SIZES (Ø D x L in mm)							
C_R (µF)	U_R (V)						
	6.3	10	16	25	40	63	100
68	-	-	4.5 x 10	-	-	8 x 11	10 x 18
	-	-	-	-	-	6.5 x 18	-
100	-	4.5 x 10	-	6 x 10	8 x 11	8 x 18	10 x 25
	-	-	-	-	6.5 x 18	-	10 x 30
150	-	-	6 x 10	8 x 11	8 x 18	10 x 18	12.5 x 30
	-	-	-	6.5 x 18	-	-	-
220	-	6 x 10	8 x 11	6.5 x 18	10 x 18	10 x 25	12.5 x 30
	-	-	-	-	-	10 x 30	-
330	-	8 x 11	6.5 x 18	8 x 18	10 x 25	12.5 x 30	15 x 30
470	8 x 11	6.5 x 18	8 x 18	10 x 18	10 x 25	12.5 x 30	18 x 30
	-	-	-	-	10 x 30	-	-
680	-	8 x 18	10 x 18	10 x 25	12.5 x 30	15 x 30	18 x 38
	-	-	-	10 x 30	-	-	-
1000	8 x 18	10 x 18	10 x 25	12.5 x 30	12.5 x 30	18 x 30	21 x 38
	-	-	10 x 30	-	-	-	-
1500	-	10 x 25	12.5 x 30	12.5 x 30	15 x 30	18 x 38	-
	-	10 x 30	-	-	-	-	-
2200	10 x 25	12.5 x 30	12.5 x 30	15 x 30	18 x 30	21 x 38	-
3300	-	12.5 x 30	15 x 30	18 x 30	18 x 38	-	-
4700	-	15 x 30	18 x 30	18 x 38	21 x 38	-	-
6800	-	18 x 30	18 x 38	21 x 38	-	-	-
10 000	-	18 x 38	21 x 38	-	-	-	-
15 000	-	21 x 38	-	-	-	-	-

DIMENSIONS in millimeters AND AVAILABLE FORMS

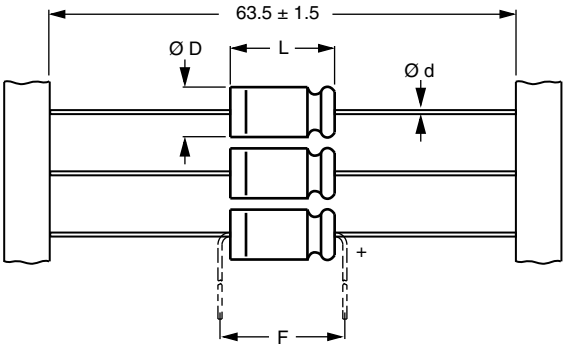

Form BR: Taped on reel
Form BA: Taped in box (ammopack)
Case Ø D x L = 4.5 mm x 10 mm to 8 mm x 11 mm

Fig. 2 - **Forms BA** and **BR**

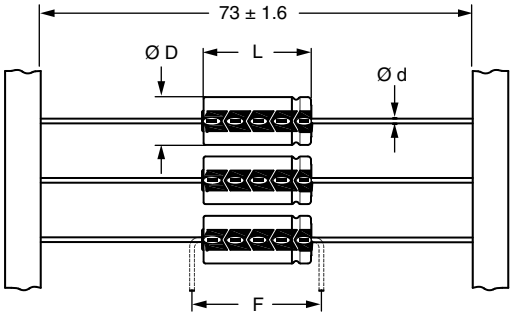

Form BR: Taped on reel
Case Ø D x L = 6.5 mm x 18 mm to 15 mm x 30 mm
Form BA: Taped in box (ammopack)
Case Ø D x L = 6.5 mm x 18 mm to 10 mm x 25 mm

Fig. 3 - **Forms BA** and **BR**

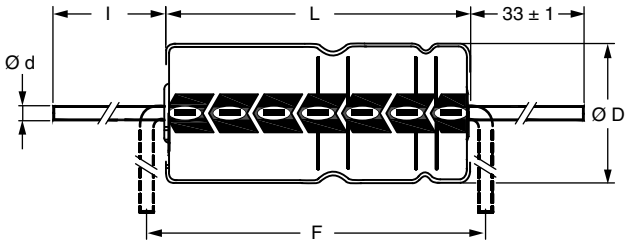

Form AA: Axial in box
Case Ø D x L = 10 mm x 30 mm to 21 mm x 38 mm

Fig. 4 - **Form AA**

For technical questions, contact: aluminumcaps1@vishay.com

THIS DOCUMENT IS SUBJECT TO CHANGE WITHOUT NOTICE. THE PRODUCTS DESCRIBED HEREIN AND THIS DOCUMENT ARE SUBJECT TO SPECIFIC DISCLAIMERS, SET FORTH AT www.vishay.com/doc?91000

Table 1

AXIAL; DIMENSIONS in millimeters, **MASS AND PACKAGING QUANTITIES**										
NOMINAL CASE SIZE Ø D x L	**CASE CODE**	**AXIAL: FORM AA, BA, AND BR**					**MASS (g)**	**PACKAGING QUANTITIES**		
		Ø d	**l**	**Ø $D_{max.}$**	**$L_{max.}$**	**$F_{min.}$**		**FORM AA**	**FORM BA**	**FORM BR**
4.5 x 10	2	0.6	-	5.0	10.5	15	≈ 0.5	-	1000	3000
6 x 10	3	0.6	-	6.3	10.5	15	≈ 0.7	-	1000	1000
8 x 11	5a	0.6	-	8.5	11.5	15	≈ 1.1	-	500	500
6.5 x 18	4	0.8	-	6.9	18.5	25	≈ 1.3	-	1000	1000
8 x 18	5	0.8	-	8.5	18.5	25	≈ 1.7	-	500	500
10 x 18	6	0.8	-	10.5	18.5	25	≈ 2.5	-	500	500
10 x 25	7	0.8	-	10.5	25.5	30	≈ 3.3	-	500	500
10 x 30	00	0.8	55 ± 1	10.5	30.5	35	≈ 4.8	340	-	500
12.5 x 30	01	0.8	55 ± 1	13.0	30.5	35	≈ 7.4	260	-	400
15 x 30	02	0.8	55 ± 1	15.5	30.5	35	≈ 11.7	200	-	250
18 x 30	03	0.8	55 ± 1	18.5	30.5	35	≈ 12.9	120	-	-
18 x 38	04	0.8	34 ± 1	18.5	39.5	44	≈ 19.0	125	-	-
21 x 38	05	0.8	34 ± 1	21.5	39.5	44	≈ 24.0	100	-	-

Note

- For detailed tape dimensions, please see www.vishay.com/doc?28361.

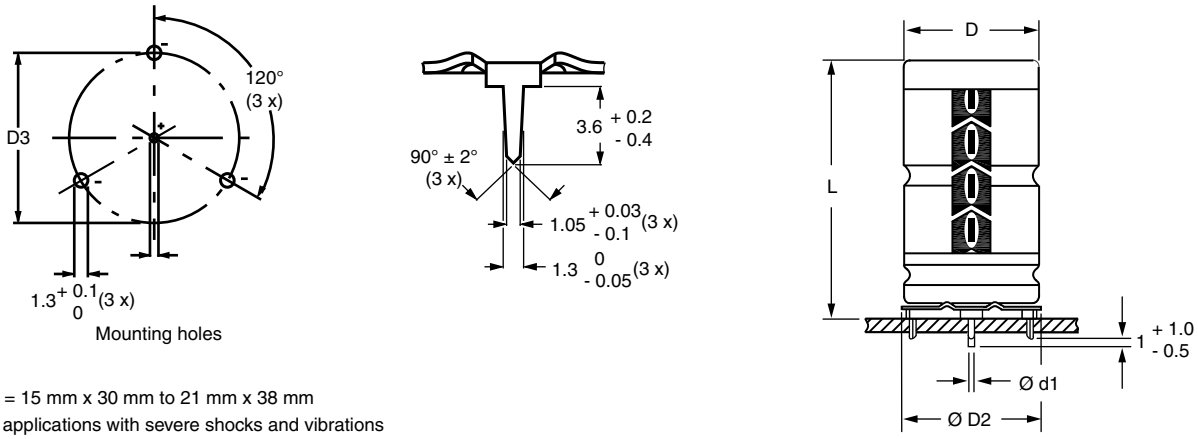

Form MR:
Case Ø D x L = 15 mm x 30 mm to 21 mm x 38 mm
Especially for applications with severe shocks and vibrations

Fig. 5 - Mounting hole diagram and outline. **Form MR:** With mounting ring and pins

Table 2

MOUNTING RING; DIMENSIONS in millimeters, **MASS AND PACKAGING QUANTITIES**								
NOMINAL CASE SIZE Ø D x L	**CASE CODE**	**MOUNTING RING: FORM MR**					**MASS (g)**	**PACKAGING QUANTITIES**
		Ø d1	**Ø d2**	**Ø $D2_{max.}$**	**D3**	**$L_{max.}$**		
15 x 30	02	0.8	1.0 + 0.4	17.5	16.5 ± 0.2	33	≈ 11.7	200
18 x 30	03	0.8	1.0 + 0.4	19.5	18.5 ± 0.2	33	≈ 12.9	240
18 x 38	04	0.8	1.0 + 0.4	19.5	18.5 ± 0.2	42	≈ 19.0	100
21 x 38	05	0.8	1.0 + 0.4	22.5	21.5 ± 0.2	42	≈ 24.0	100

For technical questions, contact: aluminumcaps1@vishay.com

THIS DOCUMENT IS SUBJECT TO CHANGE WITHOUT NOTICE. THE PRODUCTS DESCRIBED HEREIN AND THIS DOCUMENT ARE SUBJECT TO SPECIFIC DISCLAIMERS, SET FORTH AT www.vishay.com/doc?91000

ELECTRICAL DATA	
SYMBOL	DESCRIPTION
C_R	Rated capacitance at 100 Hz, tolerance ± 20 %
I_R	Rated RMS ripple current at 100 Hz, 85 °C
I_{L5}	Max. leakage current after 5 min at U_R
tan δ	Max. dissipation factor at 100 Hz
ESR	Equivalent series resistance at 100 Hz (calculated from tan $\delta_{max.}$ and C_R)
Z	Max. impedance at 10 kHz

Note
- Unless otherwise specified, all electrical values in Table 3 apply at T_{amb} = 20 °C, P = 86 kPa to 106 kPa, RH = 45 % to 75 %.

ORDERING EXAMPLE

Electrolytic capacitor 021 series

1000 µF/16 V; ± 20 %

Nominal case size: Ø 10 mm x 25 mm; Form BA

Ordering code: MAL202190518E3
Former 12 NC: 2222 021 90518

Table 3

ELECTRICAL DATA AND ORDERING INFORMATION

U_R (V)	C_R 100 Hz (µF)	NOMINAL CASE SIZE Ø D x L (mm)	I_R 100 Hz 85 °C (mA)	I_{L5} 5 min (µA)	tan δ 100 Hz	ESR 100 Hz (Ω)	Z 10 kHz (Ω)	ORDERING CODE MAL2021..... IN BOX FORM AA	TAPED ON REEL FORM BR	TAPED IN BOX FORM BA	MOUNTING RING FORM MR
6.3	470	8 x 11	260	10	0.25	0.850	0.640	-	23471E3	33471E3	-
	1000	8 x 18	440	17	0.25	0.400	0.500	-	23102E3	33102E3	-
	2200	10 x 25	710	32	0.29	0.210	0.160	-	90588E3	90589E3	-
10	100	4.5 x 10	100	6	0.20	3.200	2.000	-	24101E3	34101E3	-
	220	6 x 10	160	8.4	0.20	1.500	0.910	-	24221E3	34221E3	-
	330	8 x 11	230	11	0.20	1.000	0.610	-	24331E3	34331E3	-
	470	6.5 x 18	310	13	0.20	0.680	0.430	-	24471E3	34471E3	-
	680	8 x 18	400	18	0.20	0.470	0.290	-	24681E3	34681E3	-
	1000	10 x 18	550	24	0.20	0.320	0.200	-	24102E3	34102E3	-
	1500	10 x 25	690	34	0.23	0.250	0.180	-	90524E3	90525E3	-
	1500	10 x 30	740	34	0.23	0.245	0.180	14152E3	24152E3	-	-
	2200	12.5 x 30	980	48	0.25	0.177	0.095	14222E3	24222E3	-	-
	3300	12.5 x 30	1090	70	0.27	0.128	0.095	14332E3	24332E3	-	-
	4700	15 x 30	1320	98	0.29	0.100	0.070	14472E3	24472E3	-	44472E3
	6800	18 x 30	1590	140	0.34	0.079	0.065	14682E3	-	-	44682E3
	10 000	18 x 38	2090	204	0.40	0.064	0.040	14103E3	-	-	44103E3
	15 000	21 x 38	2250	304	0.50	0.054	0.035	14153E3	-	-	44153E3
16	68	4.5 x 10	90	6.2	0.16	3.800	2.400	-	25689E3	35689E3	-
	150	6 x 10	140	8.8	0.16	1.700	1.100	-	25151E3	35151E3	-
	220	8 x 11	210	11	0.16	1.200	0.730	-	25221E3	35221E3	-
	330	6.5 x 18	290	15	0.16	0.770	0.480	-	25331E3	35331E3	-
	470	8 x 18	380	19	0.16	0.550	0.340	-	25471E3	35471E3	-
	680	10 x 18	500	26	0.16	0.380	0.240	-	25681E3	35681E3	-
	1000	10 x 25	660	36	0.16	0.260	0.180	-	90517E3	90518E3	-
	1000	10 x 30	700	36	0.16	0.260	0.175	15102E3	25102E3	-	-
	1500	12.5 x 30	950	52	0.19	0.205	0.095	15152E3	25152E3	-	-
	2200	12.5 x 30	1040	74	0.21	0.150	0.095	15222E3	25222E3	-	-
	3300	15 x 30	1290	110	0.23	0.111	0.070	15332E3	25332E3	-	45332E3
	4700	18 x 30	1560	154	0.25	0.087	0.065	15472E3	-	-	45472E3
	6800	18 x 38	2040	222	0.30	0.070	0.040	15682E3	-	-	45682E3
	10 000	21 x 38	2170	324	0.36	0.058	0.035	15103E3	-	-	45103E3
25	47	4.5 x 10	80	6.4	0.14	4.800	2.600	-	26479E3	36479E3	-
	100	6 x 10	150	9	0.14	2.300	1.200	-	26101E3	36101E3	-
	150	8 x 11	190	12	0.14	1.500	0.800	-	90534E3	90535E3	-
	150	6.5 x 18	210	12	0.14	1.500	0.800	-	26151E3	36151E3	-
	220	6.5 x 18	250	15	0.14	1.000	0.550	-	26221E3	36221E3	-
	330	8 x 18	340	21	0.14	0.680	0.360	-	26331E3	36331E3	-
	470	10 x 18	450	28	0.14	0.480	0.260	-	26471E3	36471E3	-
	680	10 x 25	560	38	0.14	0.330	0.180	-	90527E3	90528E3	-
	680	10 x 30	640	38	0.14	0.323	0.175	16681E3	26681E3	-	-
	1000	12.5 x 30	840	54	0.14	0.220	0.095	16102E3	26102E3	-	-
	1500	12.5 x 30	950	79	0.17	0.179	0.095	16152E3	26152E3	-	-
	2200	15 x 30	1180	114	0.19	0.132	0.070	16222E3	26222E3	-	46222E3
	3300	18 x 30	1470	169	0.21	0.099	0.065	16332E3	-	-	46332E3
	4700	18 x 38	1920	239	0.23	0.079	0.040	16472E3	-	-	46472E3
	6800	21 x 38	2070	344	0.28	0.064	0.035	16682E3	-	-	46682E3

For technical questions, contact: aluminumcaps1@vishay.com
THIS DOCUMENT IS SUBJECT TO CHANGE WITHOUT NOTICE. THE PRODUCTS DESCRIBED HEREIN AND THIS DOCUMENT ARE SUBJECT TO SPECIFIC DISCLAIMERS, SET FORTH AT www.vishay.com/doc?91000

ELECTRICAL DATA AND ORDERING INFORMATION

U_R (V)	C_R 100 Hz (µF)	NOMINAL CASE SIZE Ø D x L (mm)	I_R 100 Hz 85 °C (mA)	I_{L5} 5 min (µA)	tan δ 100 Hz	ESR 100 Hz (Ω)	Z 10 kHz (Ω)	ORDERING CODE MAL2021..... IN BOX FORM AA	TAPED ON REEL FORM BR	TAPED IN BOX FORM BA	MOUNTING RING FORM MR
40	22	4.5 x 10	60	5.8	0.11	8.000	3.200	-	27229E3	37229E3	-
	47	6 x 10	110	7.8	0.11	3.800	1.500	-	27479E3	37479E3	-
	100	8 x 11	170	12	0.11	1.800	0.700	-	90537E3	90538E3	-
	100	6.5 x 18	190	12	0.11	1.800	0.700	-	27101E3	37101E3	-
	150	8 x 18	250	16	0.11	1.100	0.470	-	27151E3	37151E3	-
	220	10 x 18	330	22	0.11	0.800	0.320	-	27221E3	37221E3	-
	330	10 x 25	430	30	0.11	0.530	0.210	-	27331E3	37331E3	-
	470	10 x 25	520	42	0.11	0.370	0.180	-	90514E3	90515E3	-
	470	10 x 30	590	42	0.12	0.404	0.175	17471E3	27471E3	-	-
	680	12.5 x 30	800	58	0.12	0.297	0.110	17681E3	27681E3	-	-
	1000	12.5 x 30	900	84	0.12	0.190	0.110	17102E3	27102E3	-	-
	1500	15 x 30	1120	124	0.15	0.159	0.070	17152E3	27152E3	-	47152E3
	2200	18 x 30	1390	180	0.17	0.118	0.065	17222E3	-	-	47222E3
	3300	18 x 38	1810	268	0.19	0.090	0.040	17332E3	-	-	47332E3
	4700	21 x 38	1940	380	0.21	0.072	0.035	17472E3	-	-	47472E3
63	1.0	4.5 x 10	12	4.1	0.09	150.0	55.00	-	28108E3	38108E3	-
	2.2	4.5 x 10	21	4.3	0.09	65.00	25.00	-	28228E3	38228E3	-
	3.3	4.5 x 10	25	4.4	0.09	44.00	17.00	-	28338E3	38338E3	-
	4.7	4.5 x 10	31	4.6	0.09	31.00	12.00	-	28478E3	38478E3	-
	10	4.5 x 10	50	5.3	0.08	13.00	5.500	-	28109E3	38109E3	-
	15	4.5 x 10	55	5.9	0.08	8.500	3.700	-	28159E3	38159E3	-
	22	6 x 10	90	6.8	0.08	5.800	2.500	-	28229E3	38229E3	-
	33	6 x 10	100	8.2	0.08	3.900	1.700	-	28339E3	38339E3	-
	47	8 x 11	140	10	0.08	2.700	1.200	-	90541E3	90542E3	-
	47	6.5 x 18	150	10	0.08	2.700	1.200	-	28479E3	38479E3	-
	68	8 x 11	160	13	0.08	1.900	0.810	-	90544E3	90545E3	-
	68	6.5 x 18	170	13	0.08	1.900	0.810	-	28689E3	38689E3	-
	100	8 x 18	250	17	0.08	1.300	0.550	-	28101E3	38101E3	-
	150	10 x 18	320	23	0.08	0.850	0.370	-	28151E3	38151E3	-
	220	10 x 25	430	32	0.08	0.600	0.250	-	90511E3	90512E3	-
	220	10 x 30	480	32	0.08	0.614	0.260	18221E3	28221E3	-	-
	330	12.5 x 30	610	46	0.08	0.409	0.190	18331E3	28331E3	-	-
	470	12.5 x 30	700	63	0.08	0.287	0.130	18471E3	28471E3	-	-
	680	15 x 30	890	90	0.08	0.199	0.095	18681E3	28681E3	-	48681E3
	1000	18 x 30	1170	130	0.08	0.135	0.075	18102E3	-	-	48102E3
	1500	18 x 38	1530	193	0.11	0.122	0.045	18152E3	-	-	48152E3
	2200	21 x 38	1780	281	0.13	0.099	0.040	18222E3	-	-	48222E3
100	1.0	4.5 x 10	14	4.2	0.08	130.0	90.00	-	29108E3	39108E3	-
	2.2	4.5 x 10	20	4.4	0.08	58.00	41.00	-	29228E3	39228E3	-
	4.7	4.5 x 10	30	4.9	0.08	27.00	19.00	-	29478E3	39478E3	-
	10	6 x 10	65	6	0.08	13.00	9.000	-	29109E3	39109E3	-
	15	8 x 11	77	7	0.08	8.500	6.000	-	90547E3	90548E3	-
	15	6.5 x 18	85	7	0.08	8.500	6.000	-	29159E3	39159E3	-
	22	8 x 11	95	8.4	0.08	5.800	4.100	-	90551E3	90552E3	-
	22	6.5 x 18	100	8.4	0.08	5.800	4.100	-	29229E3	39229E3	-
	33	6.5 x 18	120	10.6	0.08	3.900	2.700	-	29339E3	39339E3	-
	47	8 x 18	160	13.4	0.08	2.700	1.900	-	29479E3	39479E3	-
	68	10 x 18	220	17.6	0.08	1.900	1.300	-	29689E3	39689E3	-
	100	10 x 25	300	24	0.08	1.300	0.900	-	90531E3	90532E3	-
	100	10 x 30	340	24	0.07	1.150	1.000	19101E3	29101E3	-	-
	150	12.5 x 30	490	34	0.07	0.645	0.610	19151E3	29151E3	-	-
	220	12.5 x 30	560	48	0.08	0.610	0.560	19221E3	29221E3	-	-
	330	15 x 30	740	70	0.09	0.420	0.400	19331E3	29331E3	-	49331E3
	470	18 x 30	980	98	0.09	0.310	0.290	19471E3	-	-	49471E3
	680	18 x 38	1260	140	0.09	0.195	0.180	19681E3	-	-	49681E3
	1000	21 x 38	1470	204	0.10	0.160	0.150	19102E3	-	-	49102E3

For technical questions, contact: aluminumcaps1@vishay.com
THIS DOCUMENT IS SUBJECT TO CHANGE WITHOUT NOTICE. THE PRODUCTS DESCRIBED HEREIN AND THIS DOCUMENT ARE SUBJECT TO SPECIFIC DISCLAIMERS, SET FORTH AT www.vishay.com/doc?91000

ADDITIONAL ELECTRICAL DATA			
PARAMETER	**CONDITIONS**	**VALUE**	
		AXIAL	**MOUNTING RING**
Voltage			
Surge voltage		$U_s \leq 1.15 \times U_R$	
Reverse voltage		$U_{rev} \leq 1$ V	
Current			
Leakage current	After 1 min at U_R	$I_{L1} \leq 0.006\ C_R \times U_R + 4\ \mu A$	
	After 5 min at U_R	$I_{L5} \leq 0.002\ C_R \times U_R + 4\ \mu A$	
Inductance			
Equivalent series inductance (ESL)	Case Ø D x L mm:		
	4.5 x 10	Typ. 10 nH	-
	6 x 10	Typ. 22 nH	-
	8 x 11	Typ. 85 nH	-
	6.5 x 18	Typ. 25 nH	-
	8 x 18	Typ. 40 nH	-
	10 x 18	Typ. 61 nH	-
	10 x 25	Typ. 38 nH	-
	10 x 30	Typ. 38 nH	-
	12.5 x 30	Typ. 46 nH	-
	15 x 30	Typ. 48 nH	Typ. 39 nH
	18 x 30	Typ. 50 nH	Typ. 39 nH
	18 x 38	Typ. 54 nH	Typ. 39 nH
	21 x 38	Typ. 59 nH	Typ. 39 nH

RIPPLE CURRENT AND USEFUL LIFE

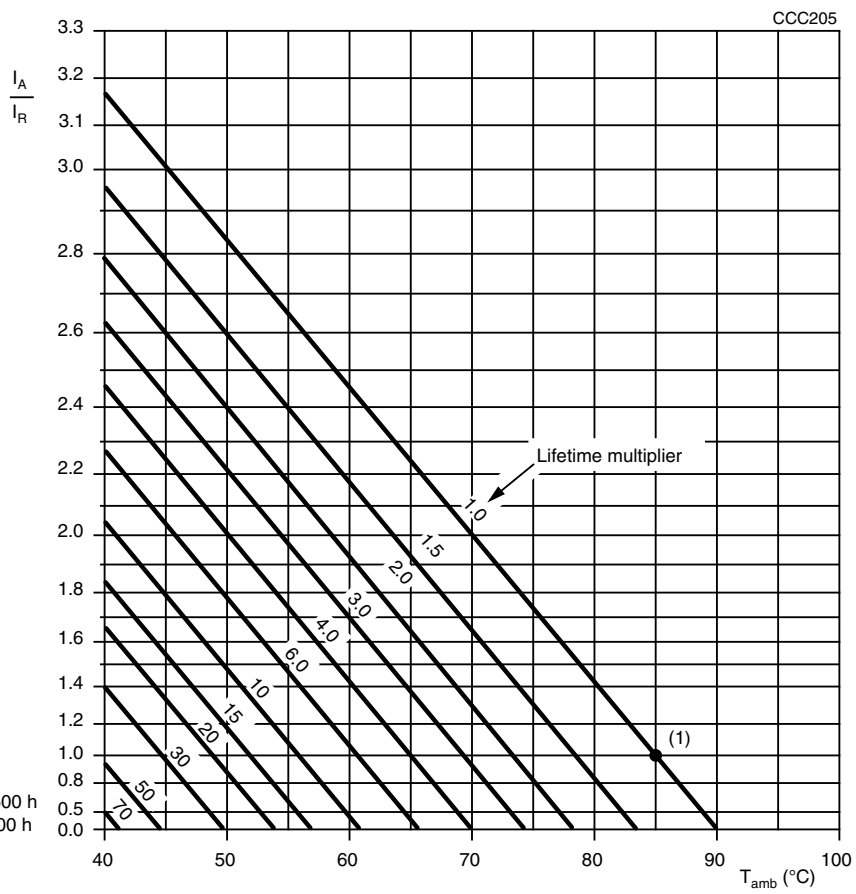

I_A = Actual ripple current at 100 Hz
I_R = Rated ripple current at 100 Hz, 85 °C

(1) Useful life at 85 °C and I_R applied:
Case Ø D x L = 4.5 mm x 10 mm to 10 mm x 25 mm: 2500 h
Case Ø D x L = 10 mm x 30 mm to 21 mm x 38 mm: 8000 h

Fig. 6 - Multiplier of useful life as a function of ambient temperature and ripple current load

For technical questions, contact: aluminumcaps1@vishay.com

THIS DOCUMENT IS SUBJECT TO CHANGE WITHOUT NOTICE. THE PRODUCTS DESCRIBED HEREIN AND THIS DOCUMENT ARE SUBJECT TO SPECIFIC DISCLAIMERS, SET FORTH AT www.vishay.com/doc?91000

Table 4

MULTIPLIER OF RIPPLE CURRENT (I_R) AS A FUNCTION OF FREQUENCY			
FREQUENCY (Hz)	I_R MULTIPLIER		
	U_R = 6.3 V TO 16 V	U_R = 25 V TO 40 V	U_R = 63 V TO 100 V
50	0.95	0.90	0.85
100	1.00	1.00	1.00
300	1.07	1.12	1.20
1000	1.12	1.20	1.30
3000	1.15	1.25	1.35
≥ 10 000	1.20	1.30	1.40

Table 5

TEST PROCEDURES AND REQUIREMENTS			
TEST		PROCEDURE (quick reference)	REQUIREMENTS
NAME OF TEST	REFERENCE		
Endurance	IEC 60384-4/ EN130300 subclause 4.13	T_{amb} = 85 °C; U_R applied; case Ø D x L = 4.5 mm x 10 mm to 10 mm x 25 mm: U_R = 6.3 V to 25 V: 1000 h; U_R = 40 V to 100 V: 2000 h; case Ø D x L = 10 mm x 30 m to 21 mm x 38 mm: U_R = 6.3 V to 100 V: 5000 h	$U_R \leq$ 6.3 V; ΔC/C: + 15 %/- 30 % U_R > 6.3 V; ΔC/C: ± 15 % tan δ ≤ 1.3 x spec. limit Z ≤ 2 x spec. limit $I_{L5} \leq$ spec. limit
		T_{amb} = 105 °C; U_R applied; case Ø D x L = 10 mm x 30 mm to 21 mm x 38 mm: 2000 h	ΔC/C: ≤ ± 20 % tan δ ≤ 1.6 x spec. limit Z ≤ 2 x spec. limit $I_{L5} \leq$ spec. limit
Useful life	CECC 30301 subclause 1.8.1	T_{amb} = 85 °C; U_R and I_R applied; case Ø D x L = 4.5 mm x 10 mm to 10 mm x 25 mm: 2500 h; case Ø D x L = 10 mm x 30 mm to 21 mm x 38 mm: 8000 h	$U_R \leq$ 6.3 V; ΔC/C: + 45 %/- 50 % U_R > 6.3 V; ΔC/C: ± 45 % tan δ ≤ 3 x spec. limit Z ≤ 3 x spec. limit $I_{L5} \leq$ spec. limit no short or open circuit total failure percentage: ≤ 1 %
Shelf life (storage at high temperature)	IEC 60384-4/ EN130300 subclause 4.17	T_{amb} = 85 °C; no voltage applied; 500 h after test: U_R to be applied for 30 min, 24 h to 48 h before measurement	ΔC/C, tan δ, Z: for requirements see “Endurance test” above $I_{L5} \leq$ 2 x spec. limit

For technical questions, contact: aluminumcaps1@vishay.com
THIS DOCUMENT IS SUBJECT TO CHANGE WITHOUT NOTICE. THE PRODUCTS DESCRIBED HEREIN AND THIS DOCUMENT ARE SUBJECT TO SPECIFIC DISCLAIMERS, SET FORTH AT www.vishay.com/doc?91000

Disclaimer

ALL PRODUCT, PRODUCT SPECIFICATIONS AND DATA ARE SUBJECT TO CHANGE WITHOUT NOTICE TO IMPROVE RELIABILITY, FUNCTION OR DESIGN OR OTHERWISE.

Vishay Intertechnology, Inc., its affiliates, agents, and employees, and all persons acting on its or their behalf (collectively, “Vishay”), disclaim any and all liability for any errors, inaccuracies or incompleteness contained in any datasheet or in any other disclosure relating to any product.

Vishay makes no warranty, representation or guarantee regarding the suitability of the products for any particular purpose or the continuing production of any product. To the maximum extent permitted by applicable law, Vishay disclaims (i) any and all liability arising out of the application or use of any product, (ii) any and all liability, including without limitation special, consequential or incidental damages, and (iii) any and all implied warranties, including warranties of fitness for particular purpose, non-infringement and merchantability.

Statements regarding the suitability of products for certain types of applications are based on Vishay’s knowledge of typical requirements that are often placed on Vishay products in generic applications. Such statements are not binding statements about the suitability of products for a particular application. It is the customer’s responsibility to validate that a particular product with the properties described in the product specification is suitable for use in a particular application. Parameters provided in datasheets and/or specifications may vary in different applications and performance may vary over time. All operating parameters, including typical parameters, must be validated for each customer application by the customer’s technical experts. Product specifications do not expand or otherwise modify Vishay’s terms and conditions of purchase, including but not limited to the warranty expressed therein.

Except as expressly indicated in writing, Vishay products are not designed for use in medical, life-saving, or life-sustaining applications or for any other application in which the failure of the Vishay product could result in personal injury or death. Customers using or selling Vishay products not expressly indicated for use in such applications do so at their own risk. Please contact authorized Vishay personnel to obtain written terms and conditions regarding products designed for such applications.

No license, express or implied, by estoppel or otherwise, to any intellectual property rights is granted by this document or by any conduct of Vishay. Product names and markings noted herein may be trademarks of their respective owners.

Material Category Policy

Vishay Intertechnology, Inc. hereby certifies that all its products that are identified as RoHS-Compliant fulfill the definitions and restrictions defined under Directive 2011/65/EU of The European Parliament and of the Council of June 8, 2011 on the restriction of the use of certain hazardous substances in electrical and electronic equipment (EEE) - recast, unless otherwise specified as non-compliant.

Please note that some Vishay documentation may still make reference to RoHS Directive 2002/95/EC. We confirm that all the products identified as being compliant to Directive 2002/95/EC conform to Directive 2011/65/EU.

Vishay Intertechnology, Inc. hereby certifies that all its products that are identified as Halogen-Free follow Halogen-Free requirements as per JEDEC JS709A standards. Please note that some Vishay documentation may still make reference to the IEC 61249-2-21 definition. We confirm that all the products identified as being compliant to IEC 61249-2-21 conform to JEDEC JS709A standards.