SKT 340

THYRISTOR BRIDGE,SCR BRIDGE



Capsule Thyristor

Line Thyristor

SKT 340

Features

- Hermetic metal case with ceramic insulator
- Capsule package for double sided cooling
- Shallow design with single sided cooling
- International standard case
- Off-state and reverse voltages up to 1800 V

Typical Applications*

- DC motor control (e. g. for machine tools)
- Controlled rectifiers (e. g. for battery charging)
- AC controllers (e. g. for temperature control)
- Recommended snubber network e. g. for $V_{VRMS} \leq 400$ V: R = 33 Ω/32 W, C = 0,47 µF



SKT

V_{RSM} V	V_{RRM}, V_{DRM} V	I_{TRMS} = 700 A (maximum value for continuous operation) I_{TAV} = 340 A (sin. 180; DSC; T_c = 82 °C)		
1300	1200	SKT 340/12E		
1700	1600	SKT 340/16E		
1900	1800	SKT 340/18E		

Symbol	Conditions	Values	Units
I_{TAV}	sin. 180; T_c = 100 (85) °C;	230 (323)	A
I_D	2 x P8/180; T_a = 45 °C; B2 / B6	300 / 420	A
	2 x P8/180F; T_a = 35 °C; B2 / B6	620 /870	A
I_{RMS}	2 x P8/180; T_a = 45 °C; W1C	330	A
I_{TSM}	T_{vj} = 25 °C; 10 ms	5700	A
	T_{vj} = 125 °C; 10 ms	5200	A
i²t	T_{vj} = 25 °C; 8,3 ... 10 ms	162000	A²s
	T_{vj} = 125 °C; 8,3 ... 10 ms	135000	A²s
V_T	T_{vj} = 25 °C; I_T = 1000 A	max. 1,9	V
$V_{T(TO)}$	T_{vj} = 125 °C	max. 1	V
r_T	T_{vj} = 125 °C	max. 0,9	mΩ
I_{DD}; I_{RD}	T_{vj} = 125 °C; V_{RD} = V_{RRM}; V_{DD} = V_{DRM}	max. 40	mA
t_{gd}	T_{vj} = 25 °C; I_G = 1 A; di_G/dt = 1 A/µs	1	µs
t_{gr}	V_D = 0,67 * V_{DRM}	2	µs
$(di/dt)_{cr}$	T_{vj} = 125 °C	max. 125	A/µs
$(dv/dt)_{cr}$	T_{vj} = 125 °C ; SKT ...D / SKT ...E	max. 500 / 1000	V/µs
t_q	T_{vj} = 125 °C ,	50 ... 150	µs
I_H	T_{vj} = 25 °C; typ. / max.	150 / 400	mA
I_L	T_{vj} = 25 °C; typ. / max.	300 / 1000	mA
V_{GT}	T_{vj} = 25 °C; d.c.	min. 2	V
I_{GT}	T_{vj} = 25 °C; d.c.	min. 150	mA
V_{GD}	T_{vj} = 125 °C; d.c.	max. 0,25	V
I_{GD}	T_{vj} = 125 °C; d.c.	max. 10	mA
$R_{th(j-c)}$	cont.; DSC	0,07	K/W
$R_{th(j-c)}$	sin. 180; DSC / SSC	0,072 / 0,151	K/W
$R_{th(j-c)}$	rec. 120; DSC / SSC	0,08 / 0,168	K/W
$R_{th(c-s)}$	DSC / SSC	0,02 / 0,04	K/W
T_{vj}		- 40 ... + 125	°C
T_{stg}		- 40 ... + 130	°C
V_{isol}		-	V~
F	mounting force	4 ... 5	kN
a			m/s²
m	approx.	61	g
Case		B 8	

© by SEMIKRON

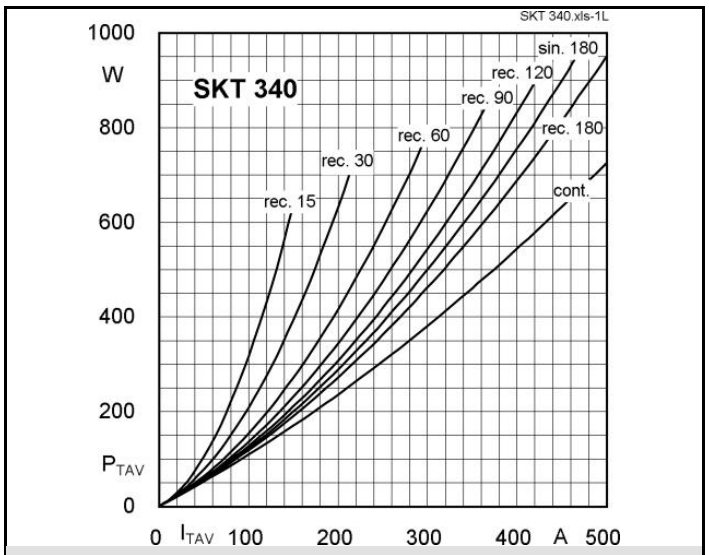

Fig. 1L Power dissipation vs. on-state current

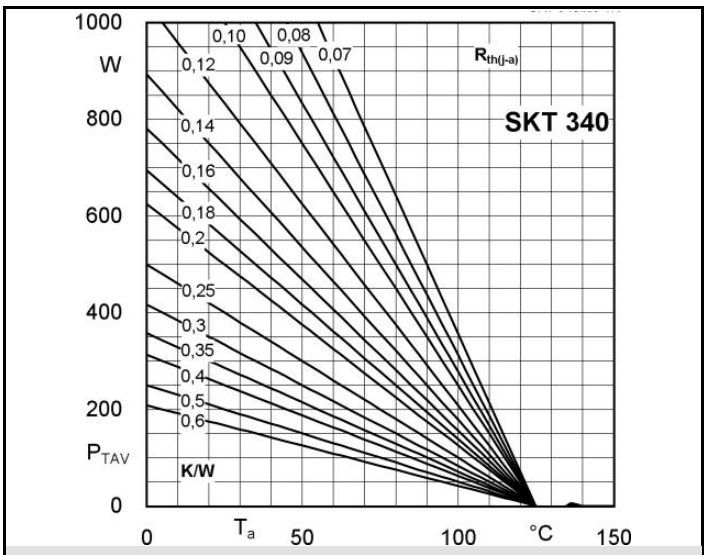

Fig. 1R Power dissipation vs. ambient temperature

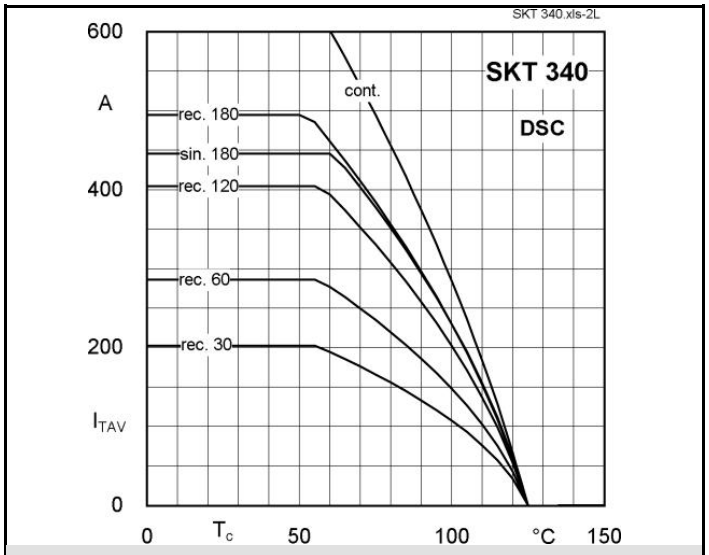

Fig. 2L Rated on-state current vs. case temperature

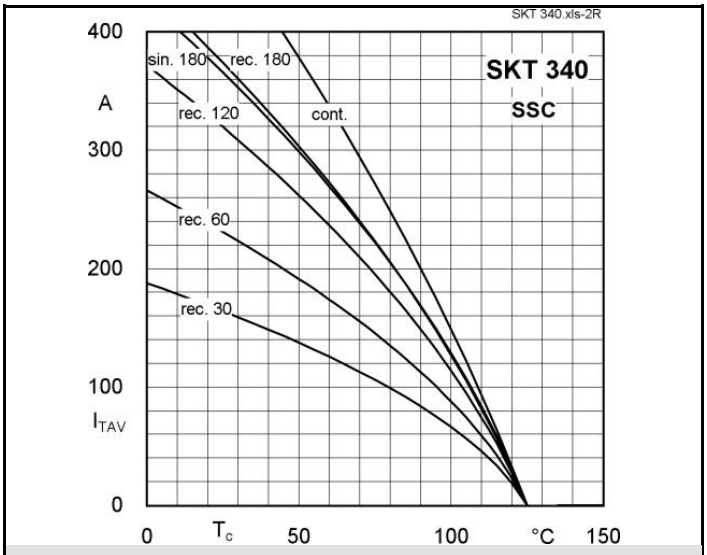

Fig. 2R Rated on-state current vs. case temperature

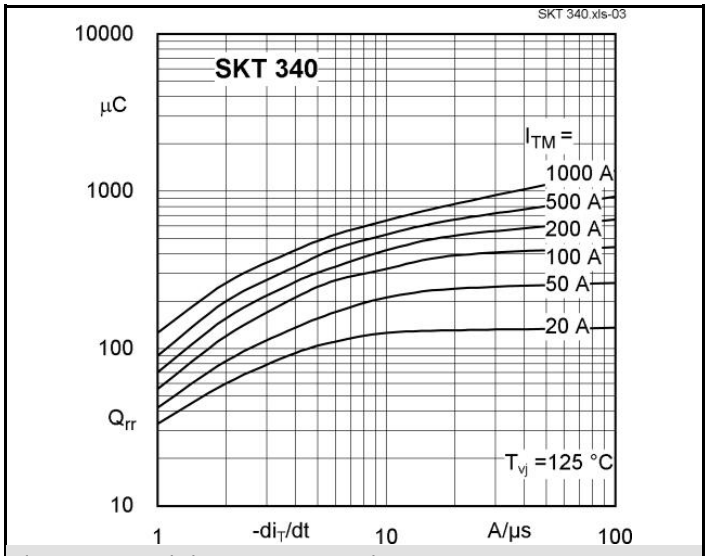

Fig. 3 Recovered charge vs. currrent decrease

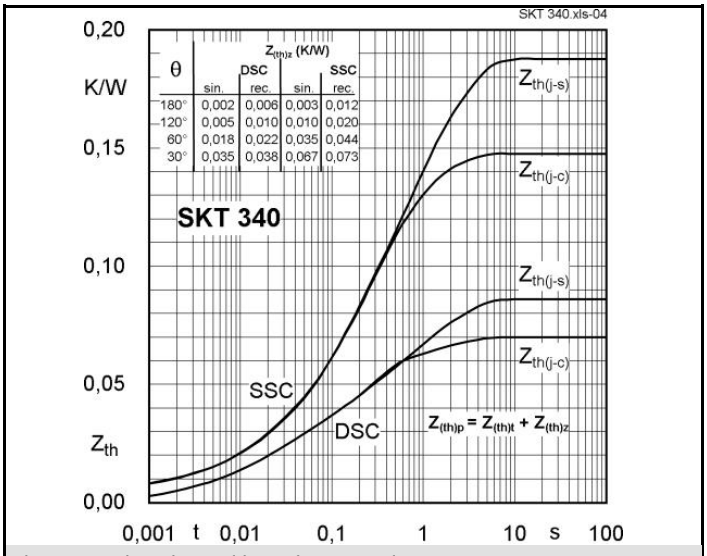

Fig. 4 Transient thermal impedance vs. time

 © by SEMIKRON

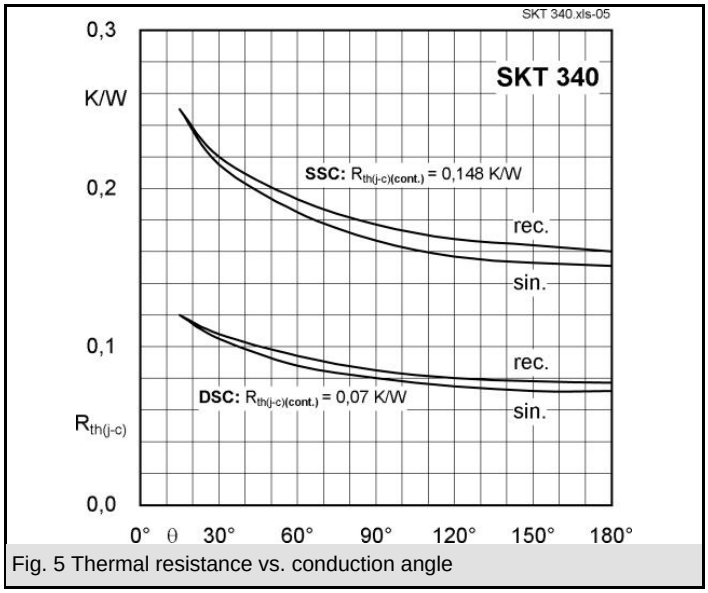

Fig. 5 Thermal resistance vs. conduction angle

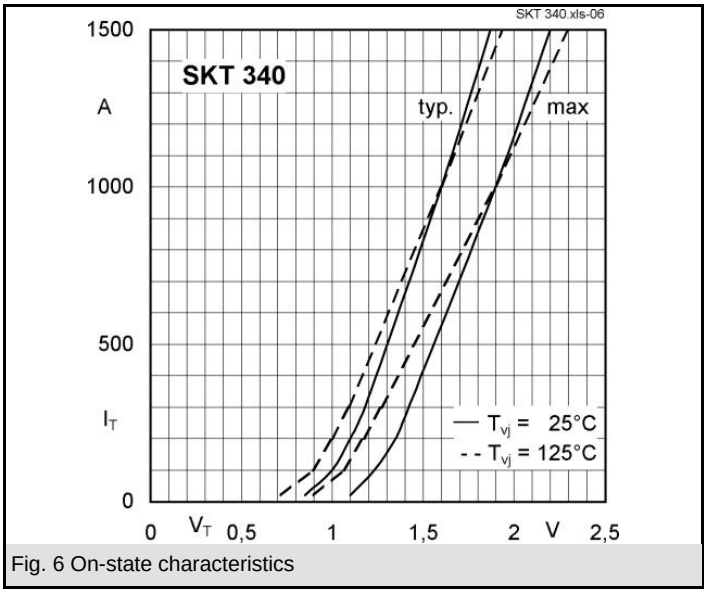

Fig. 6 On-state characteristics

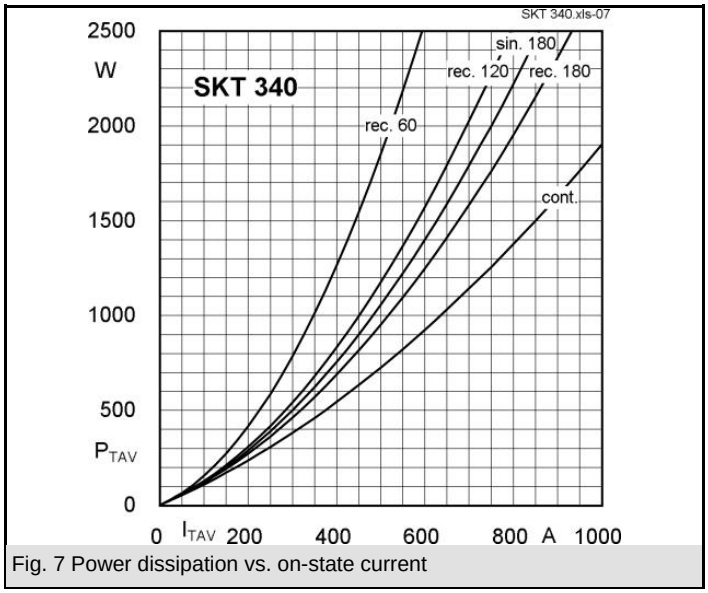

Fig. 7 Power dissipation vs. on-state current

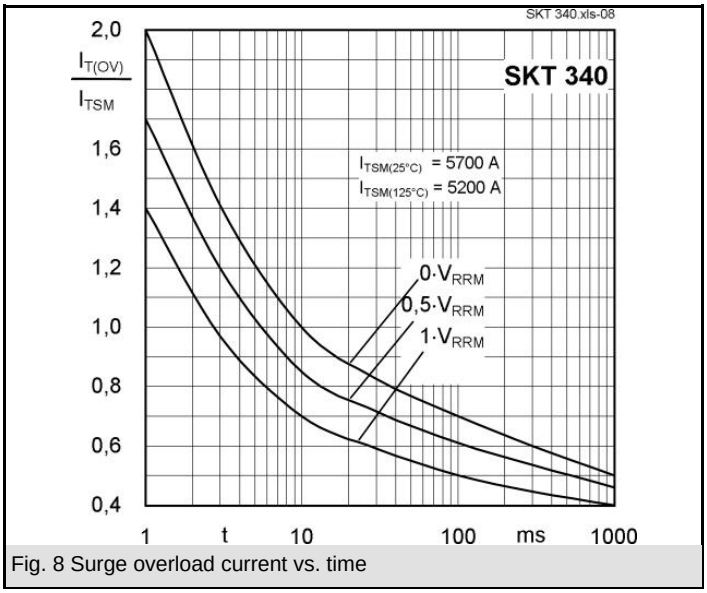

Fig. 8 Surge overload current vs. time

 © by SEMIKRON

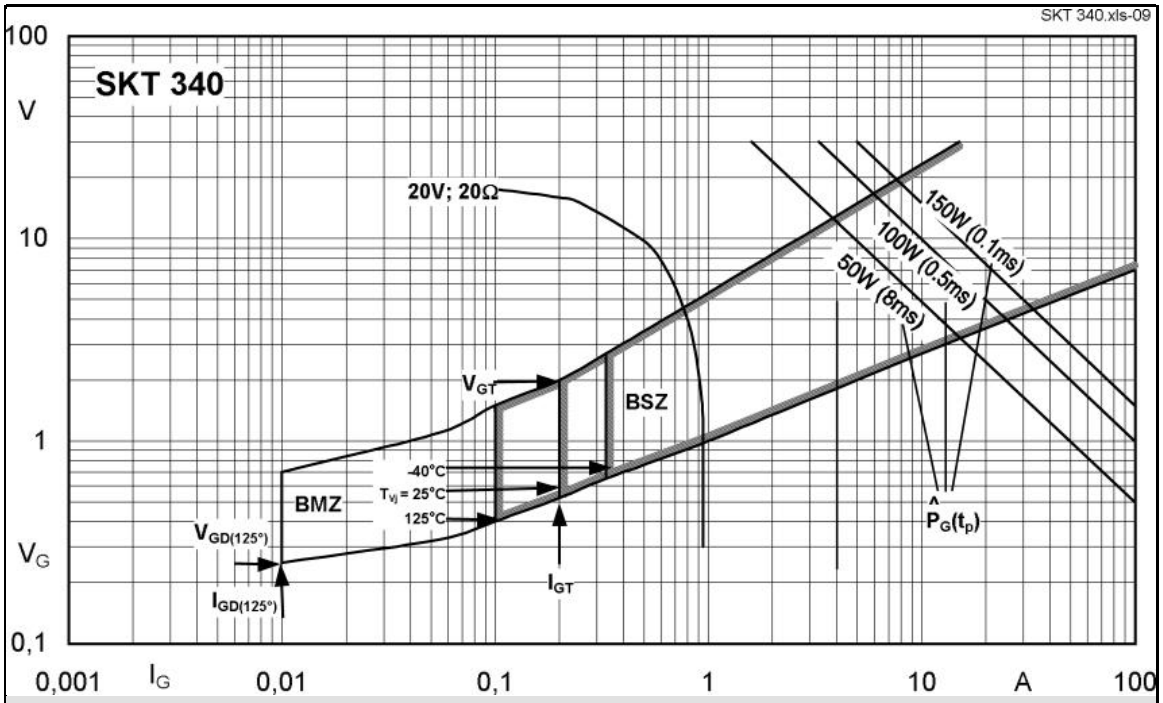

Fig. 9 Gate trigger characteristics

Dimensions in mm

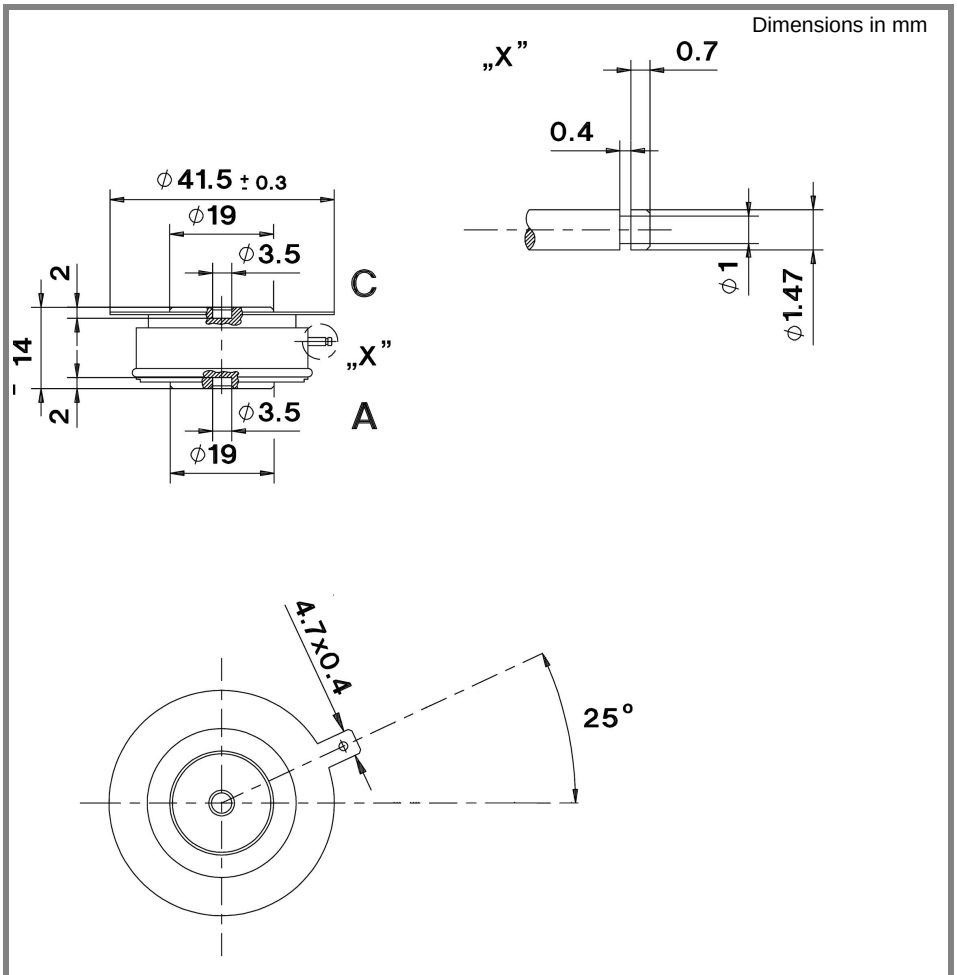

Case B 8 (JEDEC: TO-200AB)

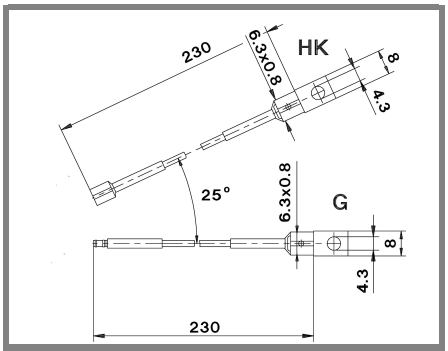

HK/Gate leads: ID-No.:33901250 (12pcs each) — separately available

* The specifications of our components may not be considered as an assurance of component characteristics. Components have to be tested for the respective application. Adjustments may be necessary. The use of SEMIKRON

 © by SEMIKRON

products in life support appliances and systems is subject to prior specification and written approval by SEMIKRON. We therefore strongly recommend prior consultation of our staff.

 © by SEMIKRON