1210 F

Engineer's Kit : EK-1210F-X

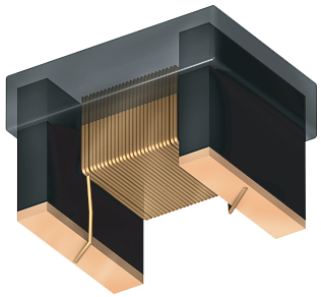

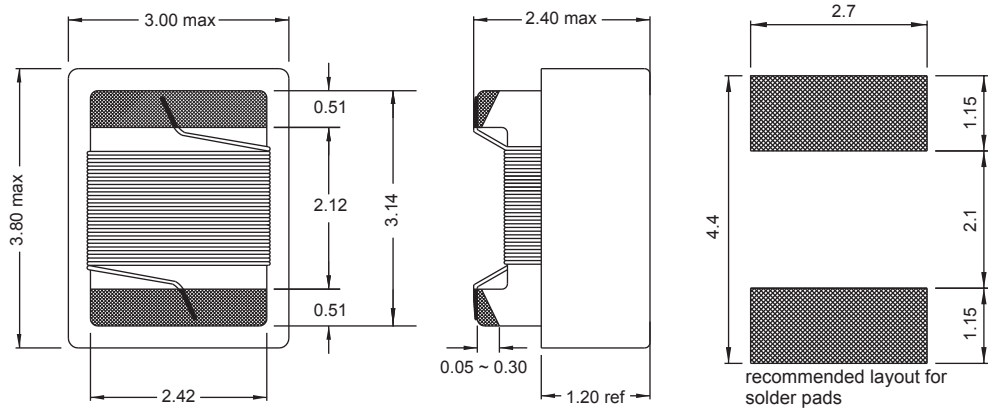

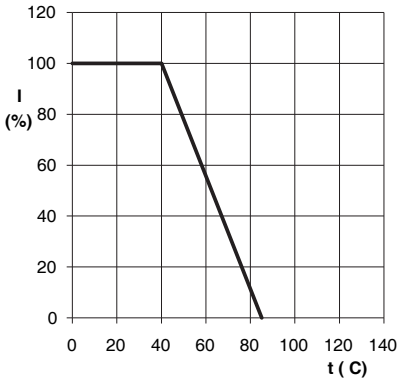

Current carrying capacity dependent on the ambient temperature

Typical Q vs Frequency (f)

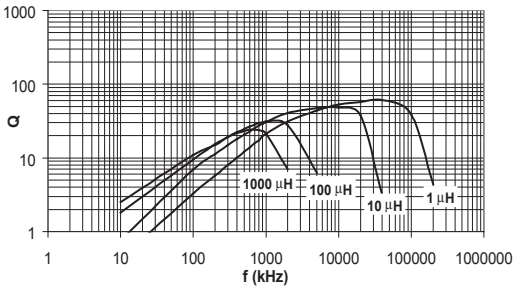

Typical L vs Frequency (f)

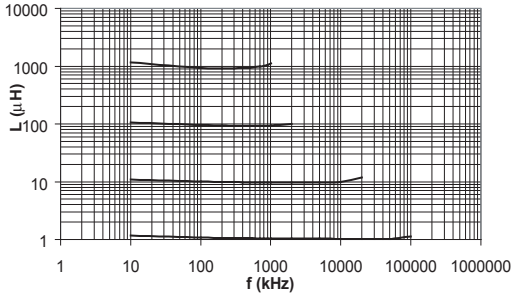

Part No	Inductance L (µH)	f_L (MHz)	Tol ± (%)	Q min	f_Q (MHz)	SRF min (MHz)	DCR max (Ω)	Rated DC Current max (mA)
1210F-R10K-01	0.1	25	10	40	25	375	0.15	1131
1210F-1R0K-01	1.0	1	10	30	7.96	200	0.28	600
1210F-1R2K-01	1.2	1	10	30	7.96	200	0.32	560
1210F-1R5K-01	1.5	1	10	30	7.96	200	0.34	535
1210F-1R8K-01	1.8	1	10	30	7.96	150	0.41	490
1210F-2R2K-01	2.2	1	10	30	7.96	150	0.43	480
1210F-2R7K-01	2.7	1	10	30	7.96	150	0.49	450
1210F-3R3K-01	3.3	1	10	30	7.96	90	0.55	425
1210F-3R9K-01	3.9	1	10	30	7.96	80	0.59	410
1210F-4R7K-01	4.7	1	10	30	7.96	70	0.65	390
1210F-5R6K-01	5.9	1	10	30	7.96	40	0.71	375
1210F-6R8K-01	6.8	1	10	27	7.96	28	0.78	360
1210F-8R2K-01	8.2	1	10	27	7.96	25	0.92	330
1210F-100K-01	10	1	10	27	2.52	15	0.98	320
1210F-120K-01	12	0.1	10	27	2.52	13	1.10	300
1210F-150K-01	15	0.1	10	27	2.52	12	1.25	280
1210F-180K-01	18	0.1	10	27	2.52	11	1.35	270
1210F-220K-01	22	0.1	10	27	2.52	10	1.45	260
1210F-270K-01	27	0.1	10	26	2.52	9.0	1.65	245
1210F-330K-01	33	0.1	10	25	2.52	8.0	1.85	230
1210F-390K-01	39	0.1	10	25	2.52	7.0	2.05	220
1210F-470K-01	47	0.1	10	25	2.52	6.5	2.30	210
1210F-560K-01	56	0.1	10	24	2.52	6.0	2.50	200
1210F-680K-01	68	0.1	10	23	2.52	5.5	2.80	190
1210F-820K-01	82	0.1	10	22	2.52	5.0	3.20	175
1210F-101K-01	100	0.1	10	22	2.52	4.5	4.70	145
1210F-121K-01	120	0.1	10	30	0.796	4.2	5.20	140
1210F-151K-01	150	0.1	10	30	0.796	4.0	6.10	130
1210F-181K-01	180	0.1	10	27	0.796	3.6	6.90	120
1210F-221K-01	220	0.1	10	25	0.796	3.3	7.50	115
1210F-271K-01	270	0.1	10	23	0.796	3.0	12.5	90
1210F-331K-01	330	0.1	10	23	0.796	2.8	14.1	85
1210F-391K-01	390	0.1	10	23	0.796	2.5	15.3	80
1210F-471K-01	470	0.1	10	22	0.796	2.3	20.5	75
1210F-561K-01	560	0.1	10	22	0.796	2.2	23.0	70
1210F-681K-01	680	0.1	10	22	0.796	1.9	25.0	65
1210F-821K-01	820	0.1	10	20	0.796	1.7	28.0	60
1210F-102K-01	1000	0.1	10	18	0.796	1.6	32.0	55

Material : Ferrite

SPQ : Reel 800 [-01]
3,000 [-04]

Remarks: - For not listed inductance values please check availability with us.
- 2% and 5% available on request.

● All dimensions in mm