LCD / LCM SPECIFICATION



WINSTAR Display Co.,Ltd.

華凌光電股份有限公司

Winstar Display Co., LTD
華凌光電股份有限公司
WEB: http://www.winstar.com.tw E-mail: sales@winstar.com.tw

SPECIFICATION

CUSTOMER : _____

MODULE NO.: WH1602A-TGH-ET#

APPROVED BY: (FOR CUSTOMER USE ONLY)	**PCB VERSION:** **DATA:**

SALES BY	APPROVED BY	CHECKED BY	PREPARED BY

VERSION	DATE	REVISED PAGE NO.	SUMMARY
A	2016/01/27		Modify Precautions in use of LCD Modules & Static electricity test

Winstar Display Co., LTD
華凌光電股份有限公司

MODLE NO：

RECORDS OF REVISION			DOC. FIRST ISSUE
VERSION	DATE	REVISED PAGE NO.	SUMMARY
0	2015/09/21		First issue
A	2016/01/27		Modify Precautions in use of LCD Modules & Static electricity test

Contents

1.Module Classification Information

2.Precautions in use of LCD Modules

3.General Specification

4.Absolute Maximum Ratings

5.Electrical Characteristics

6.Optical Characteristics

7.Interface Pin Function

8.Contour Drawing &Block Diagram

9.Character Generator ROM Pattern

10.Reliability

11.Backlight Information

12.Inspection specification

13.Material List of Components for RoHs

14.Recommendable Storage

1.Module Classification Information

W	H	1602	A	—	T	G	H	—	ET#
①	②	③	④		⑤	⑥	⑦		⑧

① Brand：WINSTAR DISPLAY CORPORATION

② Display Type：H→Character Type, G→Graphic Type, T→TAB Type

③ Display Font：Character 16 words, 02 Lines.

④ Model serials no.

⑤ Backlight Type：

N→Without backlight	T→LED, White	S→LED, High light White
B→EL, Blue green	A→LED, Amber	L→LED, Full color
D→EL, Green	R→LED, Red	J→DIP LED,Blue
W→EL, White	O→LED, Orange	K→DIP LED,White
M→EL, Yellow Green	G→LED, Green	E→DIP LED, Yellow Green
F→CCFL, White	P→LED, Blue	H→DIP LED,Amber
Y→LED, Yellow Green	X→LED, Dual color	I→DIP LED, Red
G→LED, Green	C→LED, Full color	

⑥ LCD Mode：

B→TN Positive, Gray	V→FSTN Negative, Blue
N→TN Negative,	T→FSTN Negative, Black
L→VA Negative	D→FSTN Negative (Double film)
H→ HTN Positive, Gray	F→FSTN Positive
I→HTN Negative, Black	K→FSC Negative
U→HTN Negative, Blue	S→FSC Positive
M→STN Negative, Blue	E→ISTN Negative, Black
G→STN Positive, Gray	C→CSTN Negative, Black
Y→STN Positive, Yellow Green	A→ASTN Negative, Black

⑦ LCD Polarizer Type/ Temperature range/ View direction

A→Reflective, N.T, 6:00	H→Transflective, W.T,6:00
D→Reflective, N.T, 12:00	K→Transflective, W.T,12:00
G→Reflective, W. T, 6:00	C→Transmissive, N.T,6:00
J→Reflective, W. T, 12:00	F→Transmissive, N.T,12:00
B→Transflective, N.T,6:00	I→Transmissive, W. T, 6:00
E→Transflective, N.T.12:00	L→Transmissive, W.T,12:00

⑧ Special Code ET:English and European standard font
#:Fit in with the ROHS Directions and regulations

2.Precautions in use of LCD Modules

(1)Avoid applying excessive shocks to the module or making any alterations or modifications to it.

(2)Don't make extra holes on the printed circuit board, modify its shape or change the components of LCD module.

(3)Don't disassemble the LCM.

(4)Don't operate it above the absolute maximum rating.

(5)Don't drop, bend or twist LCM.

(6)Soldering: only to the I/O terminals.

(7)Storage: please storage in anti-static electricity container and clean environment.

(8) Winstar have the right to change the passive components, including R3,R6 & backlight adjust resistors. (Resistors,capacitors and other passive components will have different appearance and color caused by the different supplier.)

(9)Winstar have the right to change the PCB Rev. (In order to satisfy the supplying stability, management optimization and the best product performance...etc, under the premise of not affecting the electrical characteristics and external dimensions, Winstar have the right to modify the version.)

(10) To ensure the stability of the display screen, please apply screen saver after showing 30 mins of fixed display content.

3.General Specification

Item	Dimension	Unit
Number of Characters	16 characters x 2Lines	—
Module dimension	84.0 x 44.0 x 13.5 (MAX)	mm
View area	66.0 x 16.0	mm
Active area	56.2 x 11.5	mm
Dot size	0.55 x 0.65	mm
Dot pitch	0.60 x 0.70	mm
Character size	2.95 x 5.55	mm
Character pitch	3.55 x 5.95	mm
LCD type	STN Positive, Gray Transflective (In LCD production, It will occur slightly color difference. We can only guarantee the same color in the same batch.)	
Duty	1/16	
View direction	6 o'clock	
Backlight Type	LED, White	
IC	ST7066U	

4.Absolute Maximum Ratings

Item	Symbol	Min	Typ	Max	Unit
Operating Temperature	T_{OP}	-20	—	+70	℃
Storage Temperature	T_{ST}	-30	—	+80	℃
Input Voltage	V_I	V_{SS}	—	V_{DD}	V
Supply Voltage For Logic	V_{DD}-V_{SS}	-0.3	—	7	V
Supply Voltage For LCD	V_{DD}-V_o	-0.3	—	13	V

5.Electrical Characteristics

Item	Symbol	Condition	Min	Typ	Max	Unit
Supply Voltage For Logic	V_{DD}-V_{SS}	—	4.5	5.0	5.5	V
Supply Voltage For LCD *Note	V_{DD}-V_0	Ta=-20℃ Ta=25℃ Ta=70℃	— 3.6 3.2	— 3.7 —	5.2 3.8 —	V V V
Input High Volt.	V_{IH}	—	0.7 V_{DD}	—	V_{DD}	V
Input Low Volt.	V_{IL}	—	Vss	—	0.6	V
Output High Volt.	V_{OH}	—	3.9	—	V_{DD}	V
Output Low Volt.	V_{OL}	—	0	—	0.4	V
Supply Current	I_{DD}	V_{DD}=5.0V	1.0	1.2	1.5	mA

* Note: Please design the VOP adjustment circuit on customer's main board

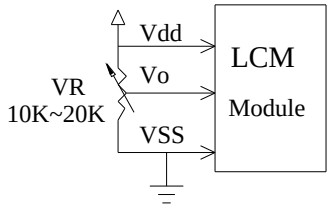

6.Optical Characteristics

Item	Symbol	Condition	Min	Typ	Max	Unit
View Angle	θ	CR≧2	0	—	20	ψ = 180°
	θ	CR≧2	0	—	40	ψ = 0°
	θ	CR≧2	0	—	30	ψ = 90°
	θ	CR≧2	0	—	30	ψ = 270°
Contrast Ratio	CR	—	—	3	—	—
Response Time	T rise	—	—	150	200	ms
	T fall	—	—	150	200	ms

Definition of Operation Voltage (Vop)

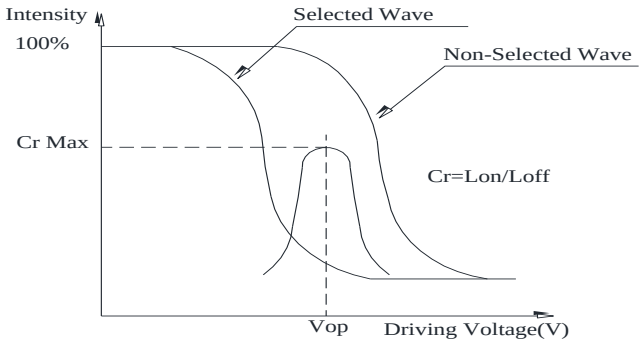

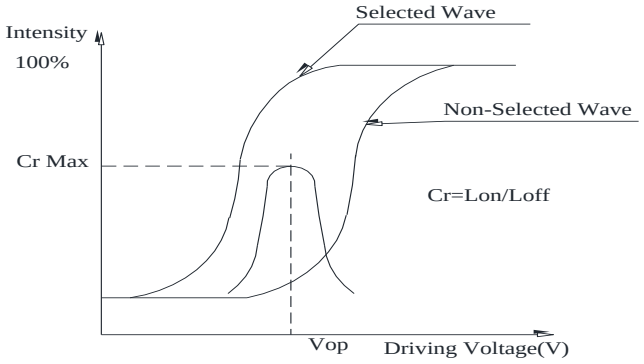

Definition of Response Time (Tr , Tf)

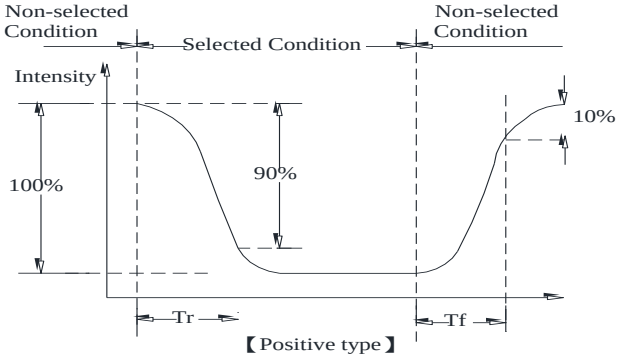

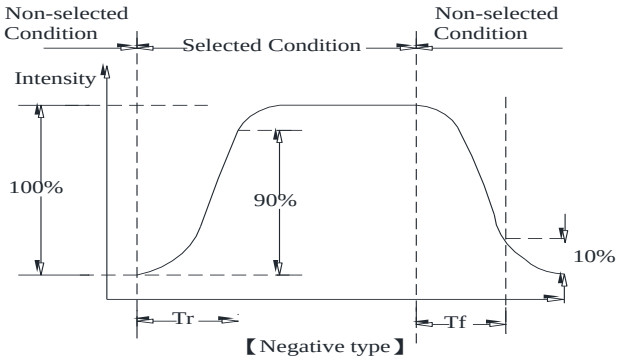

Conditions :

Operating Voltage : Vop　　Viewing Angle(θ ，φ) : 0°， 0°

Frame Frequency : 64 HZ　　Driving Waveform : 1/N duty , 1/a bias

Definition of viewing angle(CR≧2)

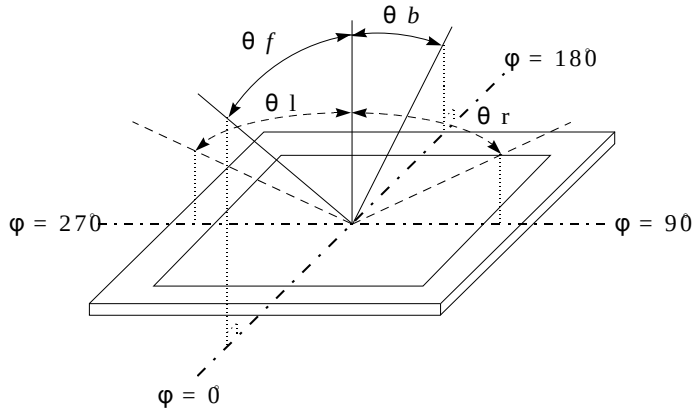

7.Interface Pin Function

Pin No.	Symbol	Level	Description
1	V_{SS}	0V	Ground
2	V_{DD}	5.0V	Supply Voltage for logic
3	VO	(Variable)	Operating voltage for LCD
4	RS	H/L	H: DATA, L: Instruction code
5	R/W	H/L	H: Read L: Write
6	E	H,H→L	Chip enable signal
7	DB0	H/L	Data bus line
8	DB1	H/L	Data bus line
9	DB2	H/L	Data bus line
10	DB3	H/L	Data bus line
11	DB4	H/L	Data bus line
12	DB5	H/L	Data bus line
13	DB6	H/L	Data bus line
14	DB7	H/L	Data bus line
15	A	—	Power supply for LED +
16	K	—	Power supply for LED—

8.Contour Drawing &Block Diagram

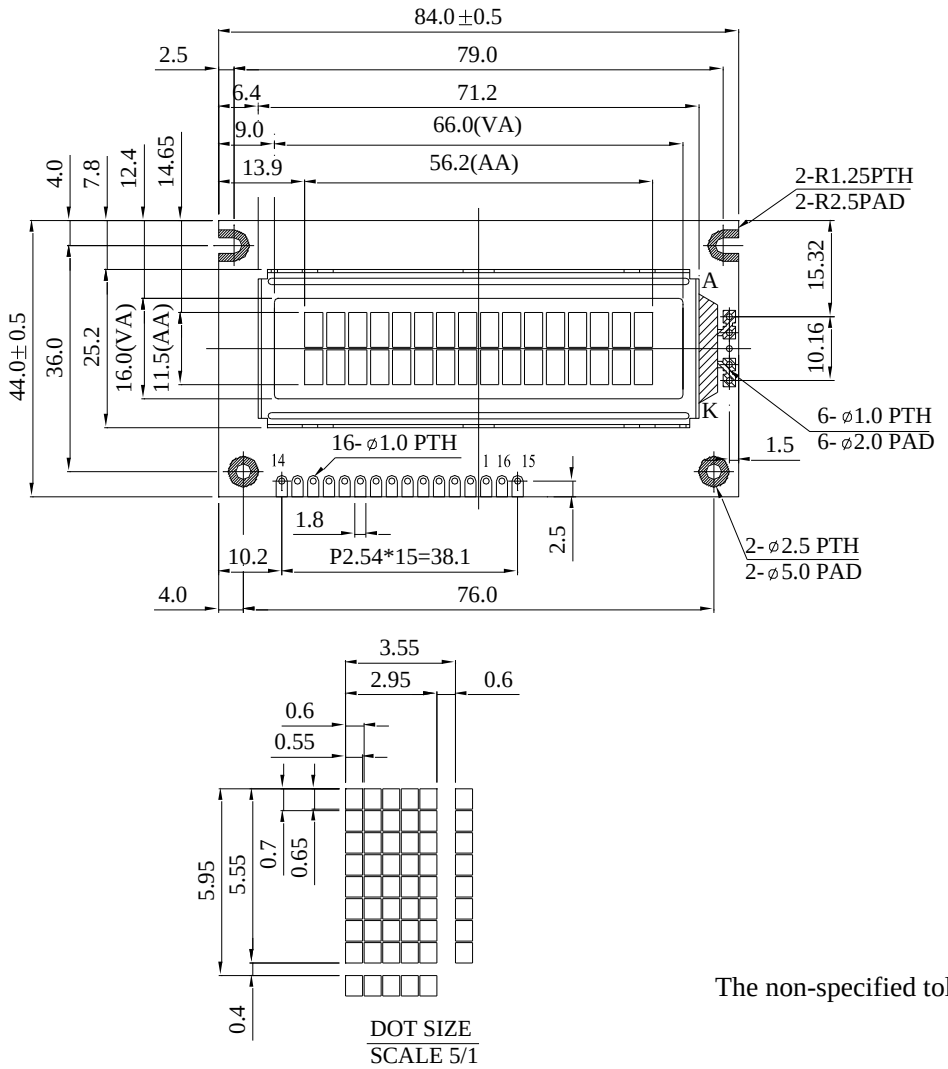

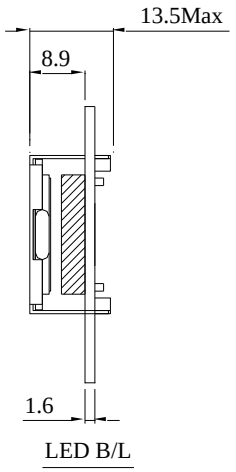

PIN NO.	SYMBOL
1	Vss
2	Vdd
3	Vo
4	RS
5	R/$\overline{W}$
6	E
7	DB0
8	DB1
9	DB2
10	DB3
11	DB4
12	DB5
13	DB6
14	DB7
15	A
16	K

The non-specified tolerance of dimension is ±0.3mm.

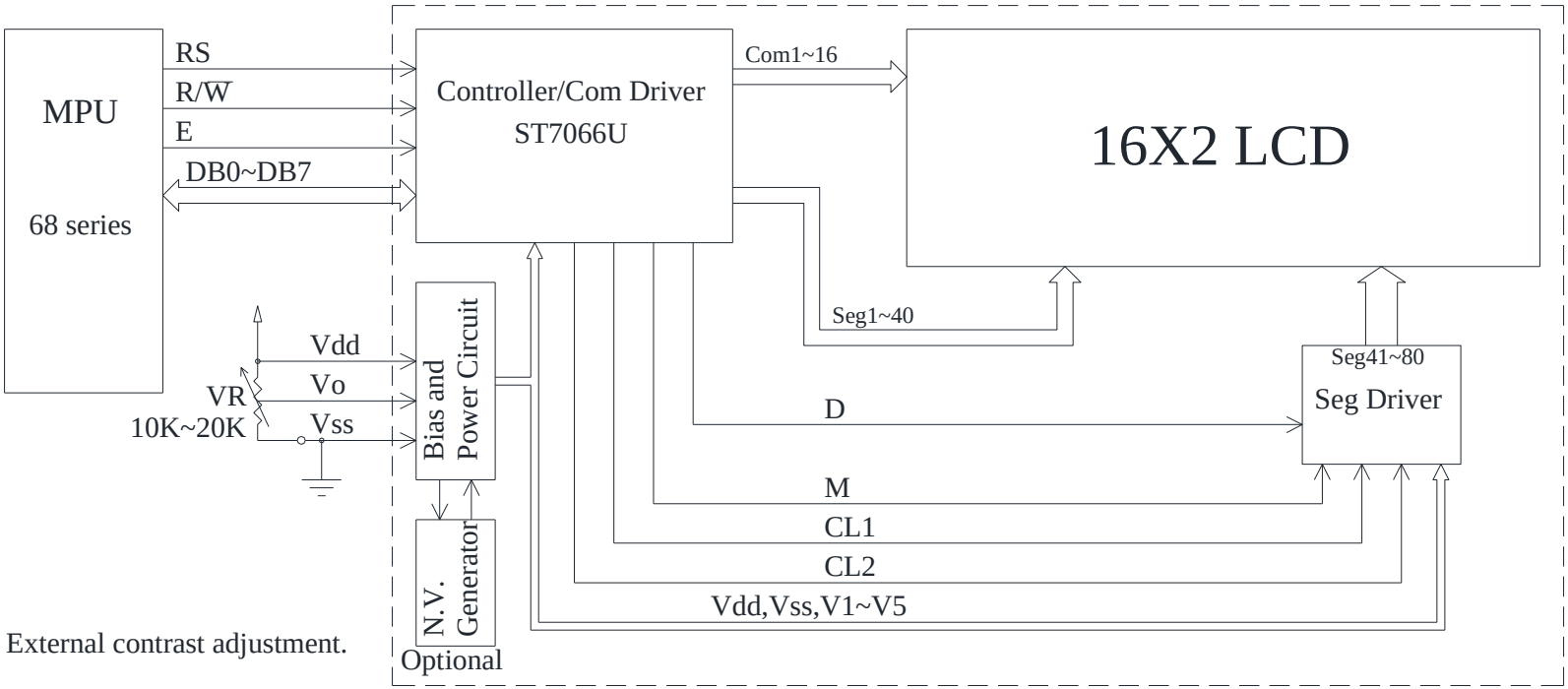

Character located	1	2	3	4	5	6	7	8	9	10	11	12	13	14	15	16
DDRAM address	00	01	02	03	04	05	06	07	08	09	0A	0B	0C	0D	0E	0F
DDRAM address	40	41	42	43	44	45	46	47	48	49	4A	4B	4C	4D	4E	4F

9.Character Generator ROM Pattern

Table.2

Upper 4 bit / Lower 4 bit	LLLL	LLLH	LLHL	LLHH	LHLL	LHLH	LHHL	LHHH	HLLL	HLLH	HLHL	HLHH	HHLL	HHLH	HHHL	HHHH
LLLL	CG RAM (1)															
LLLH	CG RAM (2)															
LLHL	CG RAM (3)															
LLHH	CG RAM (4)															
LHLL	CG RAM (5)															
LHLH	CG RAM (6)															
LHHL	CG RAM (7)															
LHHH	CG RAM (8)															
HLLL	CG RAM (1)															
HLLH	CG RAM (2)															
HLHL	CG RAM (3)															
HLHH	CG RAM (4)															
HHLL	CG RAM (5)															
HHLH	CG RAM (6)															
HHHL	CG RAM (7)															
HHHH	CG RAM (8)															

10.Reliability

Content of Reliability Test (Wide temperature, -20℃~70℃)

Environmental Test			
Test Item	**Content of Test**	**Test Condition**	**Note**
High Temperature storage	Endurance test applying the high storage temperature for a long time.	80℃ 200hrs	2
Low Temperature storage	Endurance test applying the low storage temperature for a long time.	-30℃ 200hrs	1,2
High Temperature Operation	Endurance test applying the electric stress (Voltage & Current) and the thermal stress to the element for a long time.	70℃ 200hrs	— —
Low Temperature Operation	Endurance test applying the electric stress under low temperature for a long time.	-20℃ 200hrs	1
High Temperature/ Humidity storage	The module should be allowed to stand at 60℃,90%RH max For 96hrs under no-load condition excluding the polarizer, Then taking it out and drying it at normal temperature.	60℃,90%RH 96hrs	1,2
Thermal shock resistance	The sample should be allowed stand the following 10 cycles of operation -20℃ 25℃ 70℃ 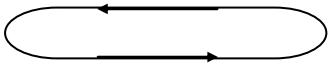 30min 5min 30min 1 cycle	-20℃/70℃ 10 cycles	— —
Vibration test	Endurance test applying the vibration during transportation and using.	Total fixed amplitude : 1.5mm Vibration Frequency : 10~55Hz One cycle 60 seconds to 3 directions of X,Y,Z for Each 15 minutes	3
Static electricity test	Endurance test applying the electric stress to the terminal.	VS=±600V(contact), ±800v(air), RS=330Ω CS=150pF 10 times	— —

Note1: No dew condensation to be observed.

Note2: The function test shall be conducted after 4 hours storage at the normal Temperature and humidity after remove from the test chamber.

Note3: The packing have to including into the vibration testing.

11.Backlight Information

Specification

PARAMETER	SYMBOL	MIN	TYP	MAX	UNIT	TEST CONDITION
Supply Current	ILED	—	32	40	mA	V=3.5V
Supply Voltage	V	3.4	3.5	3.6	V	—
Reverse Voltage	VR	—	—	5	V	—
Luminance (Without LCD)	IV	496	620	—	CD/M^2	ILED=32mA
LED Life Time (For Reference only)	—	—	50K	—	Hr.	ILED=32mA 25℃,50-60%RH, (Note 1)
Color	White					

Note: The LED of B/L is drive by current only, drive voltage is for reference only. drive voltage can make driving current under safety area (current between minimum and maximum).

Note 1:50K hours is only an estimate for reference.

Drive from pin15,pin16

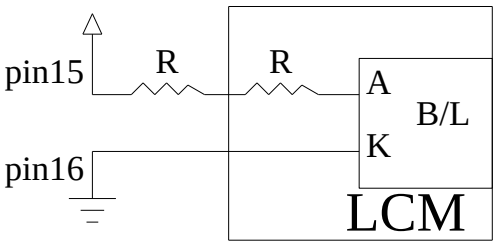

(Will never get Vee output from pin15)

12.Inspection specification

<table>
<tr><th>NO</th><th>Item</th><th>Criterion</th><th>AQL</th></tr>
<tr><td>01</td><td>Electrical Testing</td><td>Missing vertical, horizontal segment, segment contrast defect.
Missing character , dot or icon.
Display malfunction.
No function or no display.
Current consumption exceeds product specifications.
LCD viewing angle defect.
Mixed product types.
Contrast defect.</td><td>0.65</td></tr>
<tr><td>02</td><td>Black or white spots on LCD (display only)</td><td>2.1 White and black spots on display ≦0.25mm, no more than three white or black spots present.
2.2 Densely spaced: No more than two spots or lines within 3mm</td><td>2.5</td></tr>
<tr><td rowspan="2">03</td><td rowspan="2">LCD black spots, white spots, contamination (non-display)</td><td>3.1 Round type : As following drawing
Φ=(x + y) / 2
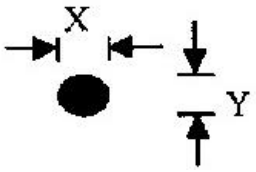

<table>
<tr><th>SIZE</th><th>Acceptable Q TY</th></tr>
<tr><td>Φ≦0.10</td><td>Accept no dense</td></tr>
<tr><td>0.10＜Φ≦0.20</td><td>2</td></tr>
<tr><td>0.20＜Φ≦0.25</td><td>1</td></tr>
<tr><td>0.25＜Φ</td><td>0</td></tr>
</table></td><td>2.5</td></tr>
<tr><td>3.2 Line type : (As following drawing)
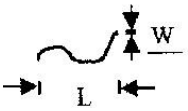

<table>
<tr><th>Length</th><th>Width</th><th>Acceptable Q TY</th></tr>
<tr><td>---</td><td>W≦0.02</td><td>Accept no dense</td></tr>
<tr><td>L≦3.0</td><td>0.02＜W≦0.03</td><td rowspan="2">2</td></tr>
<tr><td>L≦2.5</td><td>0.03＜W≦0.05</td></tr>
<tr><td>---</td><td>0.05＜W</td><td>As round type</td></tr>
</table></td><td>2.5</td></tr>
<tr><td>04</td><td>Polarizer bubbles</td><td>If bubbles are visible, judge using black spot specifications, not easy to find, must check in specify direction.
<table>
<tr><th>Size Φ</th><th>Acceptable Q TY</th></tr>
<tr><td>Φ≦0.20</td><td>Accept no dense</td></tr>
<tr><td>0.20＜Φ≦0.50</td><td>3</td></tr>
<tr><td>0.50＜Φ≦1.00</td><td>2</td></tr>
<tr><td>1.00＜Φ</td><td>0</td></tr>
<tr><td>Total Q TY</td><td>3</td></tr>
</table></td><td>2.5</td></tr>
</table>

<table>
<tr><td>NO</td><td>Item</td><td>Criterion</td><td>AQL</td></tr>
<tr><td>05</td><td>Scratches</td><td>Follow NO.3 LCD black spots, white spots, contamination</td><td></td></tr>
<tr><td>06</td><td>Chipped glass</td><td>Symbols Define:
x: Chip length y: Chip width z: Chip thickness
k: Seal width t: Glass thickness a: LCD side length
L: Electrode pad length:

6.1 General glass chip :
6.1.1 Chip on panel surface and crack between panels:
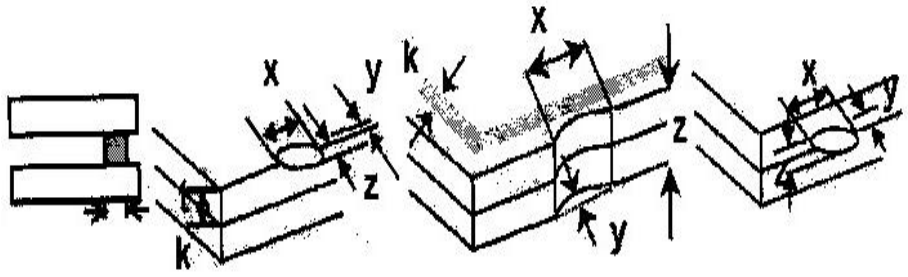

<table><tr><td>z: Chip thickness</td><td>y: Chip width</td><td>x: Chip length</td></tr><tr><td>Z≦1/2t</td><td>Not over viewing area</td><td>x≦1/8a</td></tr><tr><td>1/2t＜z≦2t</td><td>Not exceed 1/3k</td><td>x≦1/8a</td></tr></table>⊙If there are 2 or more chips, x is total length of each chip.

6.1.2 Corner crack:
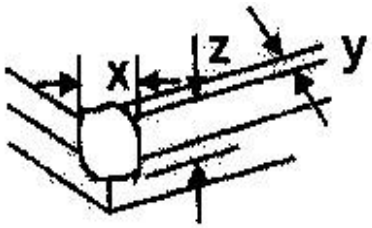

<table><tr><td>z: Chip thickness</td><td>y: Chip width</td><td>x: Chip length</td></tr><tr><td>Z≦1/2t</td><td>Not over viewing area</td><td>x≦1/8a</td></tr><tr><td>1/2t＜z≦2t</td><td>Not exceed 1/3k</td><td>x≦1/8a</td></tr></table>⊙If there are 2 or more chips, x is the total length of each chip.</td><td>2.5</td></tr>
</table>

<table>
<tr><th>NO</th><th>Item</th><th>Criterion</th><th>AQL</th></tr>
<tr><td>06</td><td>Glass crack</td><td>
Symbols :
x: Chip length y: Chip width z: Chip thickness
k: Seal width t: Glass thickness a: LCD side length
L: Electrode pad length
6.2 Protrusion over terminal :
6.2.1 Chip on electrode pad :
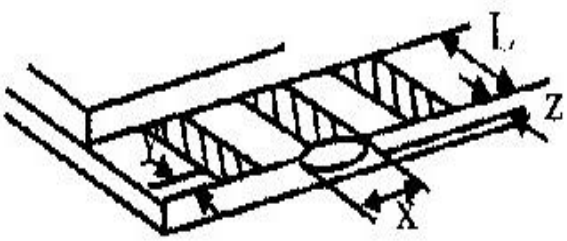
<table>
<tr><td>y: Chip width</td><td>x: Chip length</td><td>z: Chip thickness</td></tr>
<tr><td>y≦0.5mm</td><td>x≦1/8a</td><td>0 ＜ z ≦ t</td></tr>
</table>
6.2.2 Non-conductive portion:
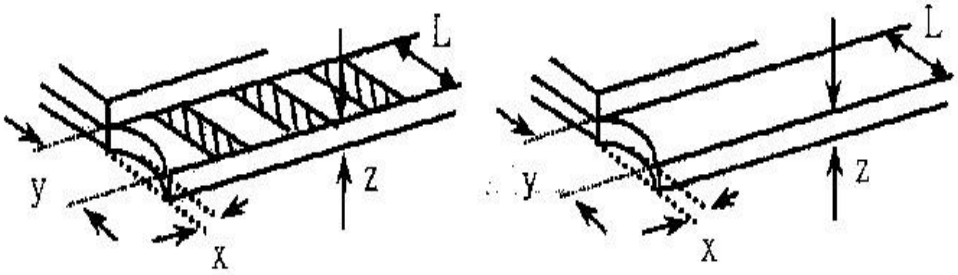
<table>
<tr><td>y: Chip width</td><td>x: Chip length</td><td>z: Chip thickness</td></tr>
<tr><td>y≦ L</td><td>x≦1/8a</td><td>0 ＜ z ≦ t</td></tr>
</table>
⊙If the chipped area touches the ITO terminal, over 2/3 of the ITO must remain and be inspected according to electrode terminal specifications.
⊙If the product will be heat sealed by the customer, the alignment mark not be damaged.
6.2.3 Substrate protuberance and internal crack.
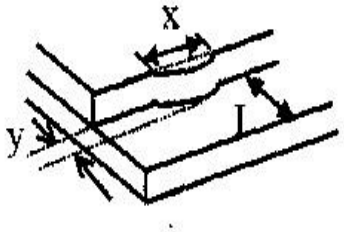
<table>
<tr><td>y: width</td><td>x: length</td></tr>
<tr><td>y≦1/3L</td><td>x ≦ a</td></tr>
</table>
</td><td>2.5</td></tr>
</table>

NO	Item	Criterion	AQL
07	Cracked glass	The LCD with extensive crack is not acceptable.	2.5
08	Backlight elements	8.1 Illumination source flickers when lit. 8.2 Spots or scratched that appear when lit must be judged. Using LCD spot, lines and contamination standards. 8.3 Backlight doesn't light or color wrong.	0.65 2.5 0.65
09	Bezel	9.1 Bezel may not have rust, be deformed or have fingerprints, stains or other contamination. 9.2 Bezel must comply with job specifications.	2.5 0.65
10	PCB、COB	10.1 COB seal may not have pinholes larger than 0.2mm or contamination. 10.2 COB seal surface may not have pinholes through to the IC. 10.3 The height of the COB should not exceed the height indicated in the assembly diagram. 10.4 There may not be more than 2mm of sealant outside the seal area on the PCB. And there should be no more than three places. 10.5 No oxidation or contamination PCB terminals. 10.6 Parts on PCB must be the same as on the production characteristic chart. There should be no wrong parts, missing parts or excess parts. 10.7 The jumper on the PCB should conform to the product characteristic chart. 10.8 If solder gets on bezel tab pads, LED pad, zebra pad or screw hold pad, make sure it is smoothed down. 10.9 The Scraping testing standard for Copper Coating of PCB 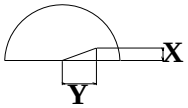 X * Y<=2mm^2	2.5 2.5 0.65 2.5 2.5 0.65 0.65 2.5 2.5
11	Soldering	11.1 No un-melted solder paste may be present on the PCB. 11.2 No cold solder joints, missing solder connections, oxidation or icicle. 11.3 No residue or solder balls on PCB. 11.4 No short circuits in components on PCB.	2.5 2.5 2.5 0.65

NO	Item	Criterion	AQL
12	General appearance	12.1 No oxidation, contamination, curves or, bends on interface Pin (OLB) of TCP.	2.5
		12.2 No cracks on interface pin (OLB) of TCP.	0.65
		12.3 No contamination, solder residue or solder balls on product.	2.5
		12.4 The IC on the TCP may not be damaged, circuits.	2.5
		12.5 The uppermost edge of the protective strip on the interface pin must be present or look as if it cause the interface pin to sever.	2.5
		12.6 The residual rosin or tin oil of soldering (component or chip component) is not burned into brown or black color.	2.5
		12.7 Sealant on top of the ITO circuit has not hardened.	2.5
		12.8 Pin type must match type in specification sheet.	0.65
		12.9 LCD pin loose or missing pins.	0.65
		12.10 Product packaging must the same as specified on packaging specification sheet.	0.65
		12.11 Product dimension and structure must conform to product specification sheet.	0.65
		12.12 Visual defect outside of VA is not considered to be rejection.	0.65

13.Material List of Components for RoHs

1. WINSTAR Display Co., Ltd hereby declares that all of or part of products (with the mark "#"in code), including, but not limited to, the LCM, accessories or packages, manufactured and/or delivered to your company (including your subsidiaries and affiliated company) directly or indirectly by our company (including our subsidiaries or affiliated companies) do not intentionally contain any of the substances listed in all applicable EU directives and regulations, including the following substances.

   Exhibit A：The Harmful Material List

Material	(Cd)	(Pb)	(Hg)	(Cr6+)	PBBs	PBDEs
Limited Value	100 ppm	1000 ppm	1000 ppm	1000 ppm	1000 ppm	1000 ppm
Above limited value is set up according to RoHS.						

2.Process for RoHS requirement：**(only for RoHS inspection)**

(1) Use the Sn/Ag/Cu soldering surface；the surface of Pb-free solder is rougher than we used before.

(2) Heat-resistance temp.：

Reflow：250℃,30 seconds Max.；

Connector soldering wave or hand soldering：320℃, 10 seconds max.

(3) Temp. curve of reflow, max. Temp.：235±5℃；

Recommended customer's soldering temp. of connector：280℃, 3 seconds.

14.Recommendable Storage

1. Place the panel or module in the temperature 25℃±5℃ and the humidity below 65% RH
2. Do not place the module near organics solvents or corrosive gases.
3. Do not crush, shake, or jolt the module.

winstar **LCM Sample Estimate Feedback Sheet**

Module Number： _____ **Page: 1**

1、Panel Specification：

1. Panel Type： ☐ Pass ☐ NG ,_____
2. View Direction： ☐ Pass ☐ NG ,_____
3. Numbers of Dots： ☐ Pass ☐ NG ,_____
4. View Area： ☐ Pass ☐ NG ,_____
5. Active Area： ☐ Pass ☐ NG ,_____
6. Operating Temperature： ☐ Pass ☐ NG ,_____
7. Storage Temperature： ☐ Pass ☐ NG ,_____
8. Others：_____

2、Mechanical Specification：

1. PCB Size： ☐ Pass ☐ NG ,_____
2. Frame Size： ☐ Pass ☐ NG ,_____
3. Materal of Frame： ☐ Pass ☐ NG ,_____
4. Connector Position： ☐ Pass ☐ NG ,_____
5. Fix Hole Position： ☐ Pass ☐ NG ,_____
6. Backlight Position： ☐ Pass ☐ NG ,_____
7. Thickness of PCB： ☐ Pass ☐ NG ,_____
8. Height of Frame to PCB： ☐ Pass ☐ NG ,_____
9. Height of Module： ☐ Pass ☐ NG ,_____
10. Others： ☐ Pass ☐ NG ,_____

3、Relative Hole Size：

1. Pitch of Connector： ☐ Pass ☐ NG ,_____
2. Hole size of Connector： ☐ Pass ☐ NG ,_____
3. Mounting Hole size： ☐ Pass ☐ NG ,_____
4. Mounting Hole Type： ☐ Pass ☐ NG ,_____
5. Others： ☐ Pass ☐ NG ,_____

4、Backlight Specification：

1. B/L Type： ☐ Pass ☐ NG ,_____
2. B/L Color： ☐ Pass ☐ NG ,_____
3. B/L Driving Voltage (Reference for LED Type)： ☐ Pass ☐ NG ,_____
4. B/L Driving Current： ☐ Pass ☐ NG ,_____
5. Brightness of B/L： ☐ Pass ☐ NG ,_____
6. B/L Solder Method： ☐ Pass ☐ NG ,_____
7. Others： ☐ Pass ☐ NG ,_____

>> **Go to page 2** <<

5、Electronic Characteristics of Module：

1.	Input Voltage：	☐ Pass	☐ NG ,_____
2.	Supply Current：	☐ Pass	☐ NG ,_____
3.	Driving Voltage for LCD：	☐ Pass	☐ NG ,_____
4.	Contrast for LCD：	☐ Pass	☐ NG ,_____
5.	B/L Driving Method：	☐ Pass	☐ NG ,_____
6.	Negative Voltage Output：	☐ Pass	☐ NG ,_____
7.	Interface Function：	☐ Pass	☐ NG ,_____
8.	LCD Uniformity：	☐ Pass	☐ NG ,_____
9.	ESD test：	☐ Pass	☐ NG ,_____
10.	Others：	☐ Pass	☐ NG ,_____

6、Summary：

Sales signature：_____

Customer Signature：_____ **Date**： / /