Winstar Display Co., LTD
華凌光電股份有限公司
WEB: http://www.winstar.com.tw E-mail: winstar@winstar.com.tw

SPECIFICATION

CUSTOMER : _____

MODULE NO.: WF70NTZAHLNNO#

APPROVED BY: **(FOR CUSTOMER USE ONLY)**	**PCB VERSION: DATA:**

SALES BY	APPROVED BY	CHECKED BY	PREPARED BY
			葉虹蘭
ISSUED DATE: 2014/02/10			

TFT Display Inspection Specification: http://www.winstar.com.tw/service.php

MODLE NO：

RECORDS OF REVISION

DOC. FIRST ISSUE

VERSION	DATE	REVISED PAGE NO.	**SUMMARY**
0	2013/07/24		First issue
A	2013/10/23		Update Package Specification
B	2014/02/10		Remove Package Specification Modify Luminance,Contrast Ratio,Viewing Angle

Contents

1.Module Classification Information

2.Summary

3.General Specification

4.Absolute Maximum Ratings

5.Electrical Characteristics

6.DC Characteristics

7.AC Characteristics

8.Optical Characteristics

9.Interface

10.Reliability

11.Contour Drawing

12.Other

1.Module Classification Information

W	F	70	N	T	Z	A	H	L	N	N	0	#
①	②	③	④	⑤	⑥	⑦	⑧	⑨	⑩	⑪	⑫	⑬

①	Brand：WINSTAR DISPLAY CORPORATION		
②	Display Type：F→TFT Type, J→Custom TFT		
③	Display Size：7.0” TFT		
④	Model serials no.		
⑤	Backlight Type：	F→CCFL, White S→LED, High Light White	T→LED, White
⑥	LCD Polarize Type/ Temperature range/ Gray Scale Inversion Direction	I→Transmissive, W. T, 6:00 L→Transmissive, W.T,12:00 Z→Transmissive, W.T, Wide Viewing Angle for O-FILM Y→Transmissive, W.T, Wide View	
⑦	A：TFT LCD B：TFT+FR+CONTROL BOARD C：TFT+FR+A/D BOARD D：TFT+FR+A/D BOARD+CONTROL BOARD E：TFT+FR+POWER BOARD F：TFT+CONTROL BOARD	G：TFT+FR H：TFT+D/V BOARD I：TFT+FR+D/V BOARD J：TFT+POWER BD	
⑧	Solution:		
	A: 128160	B:320234	C:320240
	H:1024600	I:320480	J:240320
⑨	D: Digital L：LVDS		
⑩	Interface： N：without control board A：8Bit B：16Bit		
⑪	TS： N：Without TS T：resistive touch panel C：capacitive touch panel		
⑫	Version		
⑬	Special Code	#:Fit in with ROHS directive regulations	

2.Summary

This technical specification applies to 7.0’ color TFT-LCD panel. The 7.0’ color TFT-LCD panel is designed for camcorder, digital camera application and other electronic products which require high quality flat panel displays. This module follows RoHS.

3.General Specifications

Item	Dimension	Unit
Dot Matrix	1024 × 3(RGB) × 600	dots
Module dimension	165.75 (W) ×105.39(H) ×2.45(D)	mm
Active area	153.6(W) × 90.0(H)	mm
Dot pitch	0.05(W) × 0.15(H)	mm
LCD type	TFT, Transmissive	
View Direction	Wide Viewing Angle (12 o'clock)	
Gray Scale Inversion Direction	Wide Viewing Angle (6 o'clock)	
Backlight Type	LED,Normally White	
Surface treatment	Anti-Glare	
Interface	LVDS	

4.Absolute Maximum Ratings

Item	Symbol	Values		Unit	Remark
		Min.	Max.		
Power voltage	DVDD	-0.3	5.0	V	
	AVDD	6.5	13.5	V	
	VGH	-0.3	42.0	V	
	VGL	-20.0	0.3	V	
	VGH-VGL	—	40.0	V	
Operation temperature	TOP	-20	60	℃	
Storage temperature	TST	-30	70	℃	
LED Reverse Voltage	VR	—	5	V	Each LED
LED Reverse Voltage	IF	—	35	mA	Each LED

Note 1: The absolute maximum rating values of this product are not allowed to be exceeded at any times. Should a module be used with any of the absolute maximum ratings exceeded, the characteristics of the module may not be recovered, or in an extreme case, the module may be permanently destroyed.

5.Electrical Characteristics

5.1. Typical Operation Conditions

Item	Symbol	Values			Unit	Remark
		Min.	TYP.	MAX.		
Power voltage	DVDD	3.0	3.3	3.6	V	Note 2
	AVDD	10.8	11	11.2	V	
	VGH	19.7	20	20.3	V	
	VGL	-6.5	-6.8	-7.1	V	
Input signal voltage	VCOM	3.4	(3.7)	4.0	V	Note 4
Input logic high voltage	VIH	0.7 DVDD	-	DVDD	V	Note 3
Input logic low voltage	VIL	0	-	0.3 DVDD	V	

Note 1: Be sure to apply DVDD and VGL to the LCD first, and then apply VGH.
Note 2: DVDD setting should match the signals output voltage (refer to Note 3) of customer's system board.
Note 3: LVDS, Reset.
Note 4: Typ. VCOM is only a reference value, it must be optimized according to each LCM. Be sure to use VR;

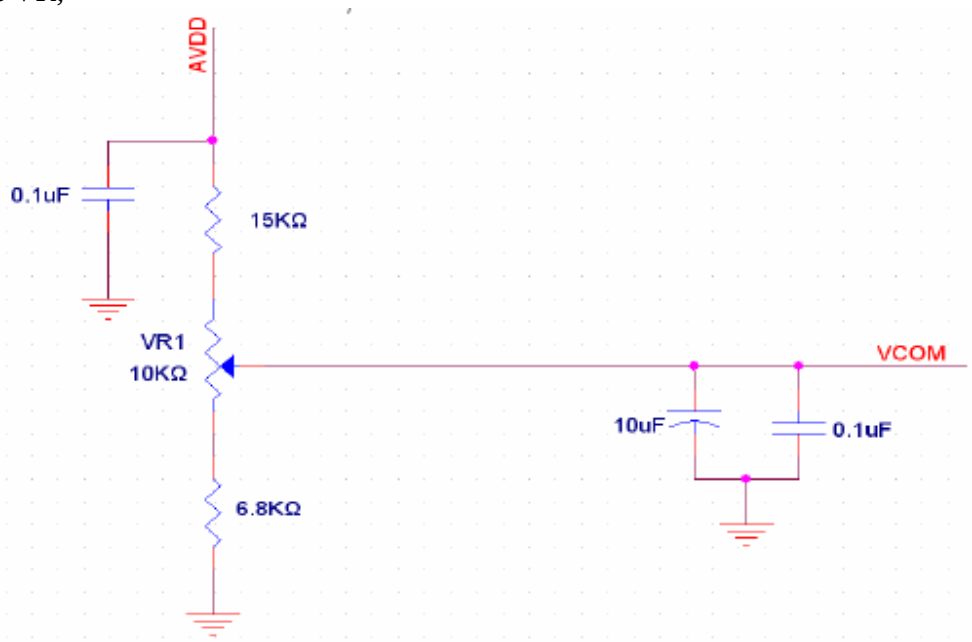

5.2. Current Consumption

Item	Symbol	Values			Unit	Remark
		Min.	Typ.	Max.		
Current for Driver	IGH	—	0.25	1.0	mA	VGH =20V
	IGL	—	0.25	1.0	mA	VGL = -6.8V
	IDVDD	—	38	60	mA	DVDD =3.3V
	IAVDD	—	20	30	mA	AVDD =11V

5.3. Backlight Driving Conditions

Item	Symbol	Values			Unit	Remark
		Min.	Typ.	Max.		
Voltage for LED backlight	VL	—	9.3	10.2	V	Note 1
Current for LED backlight	IL	—	160	200	mA	
LED life time	—	—	20000	—	Hr	Note 2

Note 1: The LED Supply Voltage is defined by the number of LED at Ta=25℃ and IL =160mA.

Note 2: The “LED life time” is defined as the module brightness decrease to 50% original brightness at Ta=25℃ and IL =160mA. The LED lifetime could be decreased if operating IL is lager than 160mA.

5.4. Power Sequence

a. Power on:

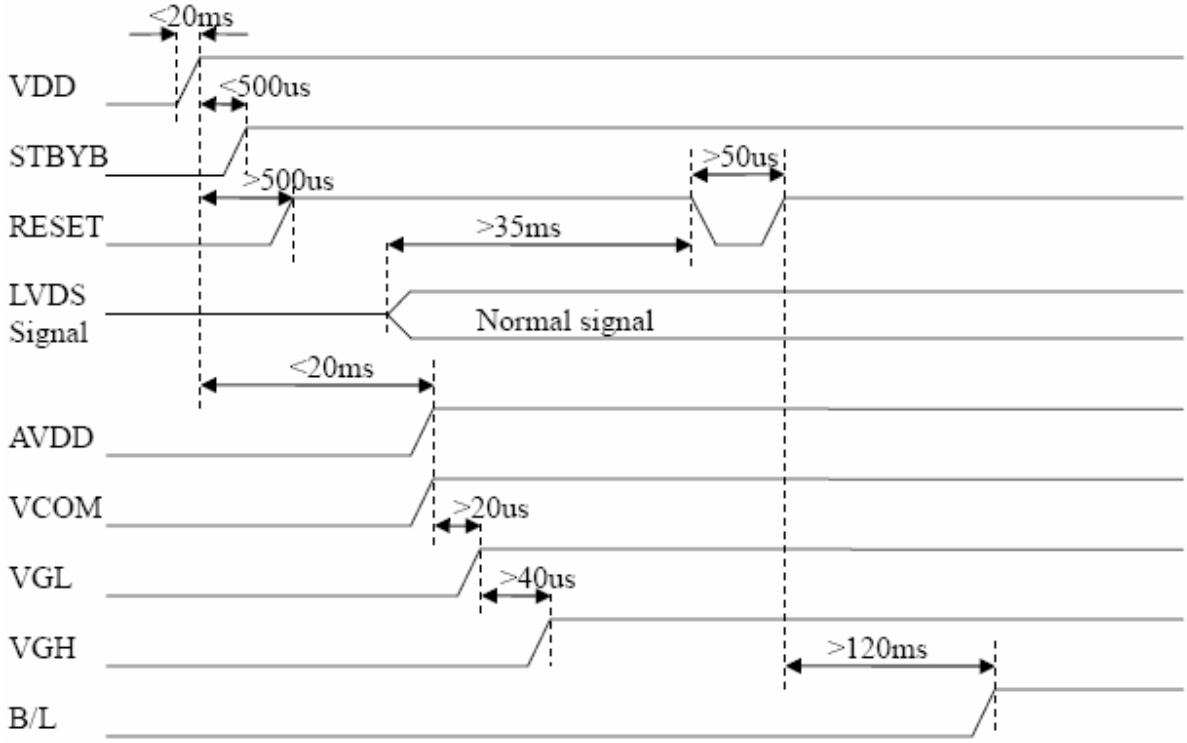

b. Power off:

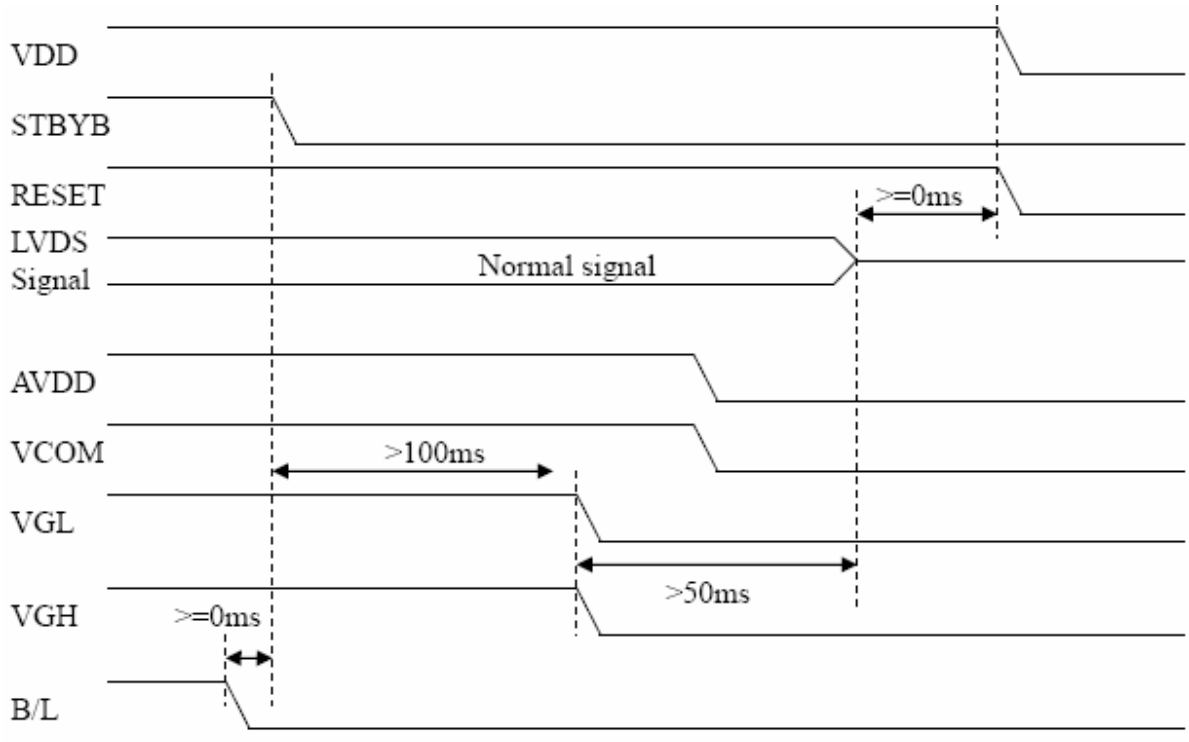

6.DC CHARATERISTICS

Parameter	Symbol	Values			Unit	Remark
		Min.	Typ.	Max.		
Differential input high Threshold voltage	R_{xVTH}	-	-	+0.1	V	R_{XVCM} =1.2V
Differential input low Threshold voltage	R_{xVTL}	-0.1	-	-	V	
Input voltage range (singled-end)	R_{xVIN}	0	-	2.4	V	
Differential input common mode voltage	R_{xVCM}	$\|V_{ID}\|/2$	-	$2.4-\|V_{ID}\|/2$	V	
Differential voltage	$\|V_{ID}\|$	0.2	-	0.6	V	
Differential input leakage current	RV_{xliz}	-10	-	+10	uA	

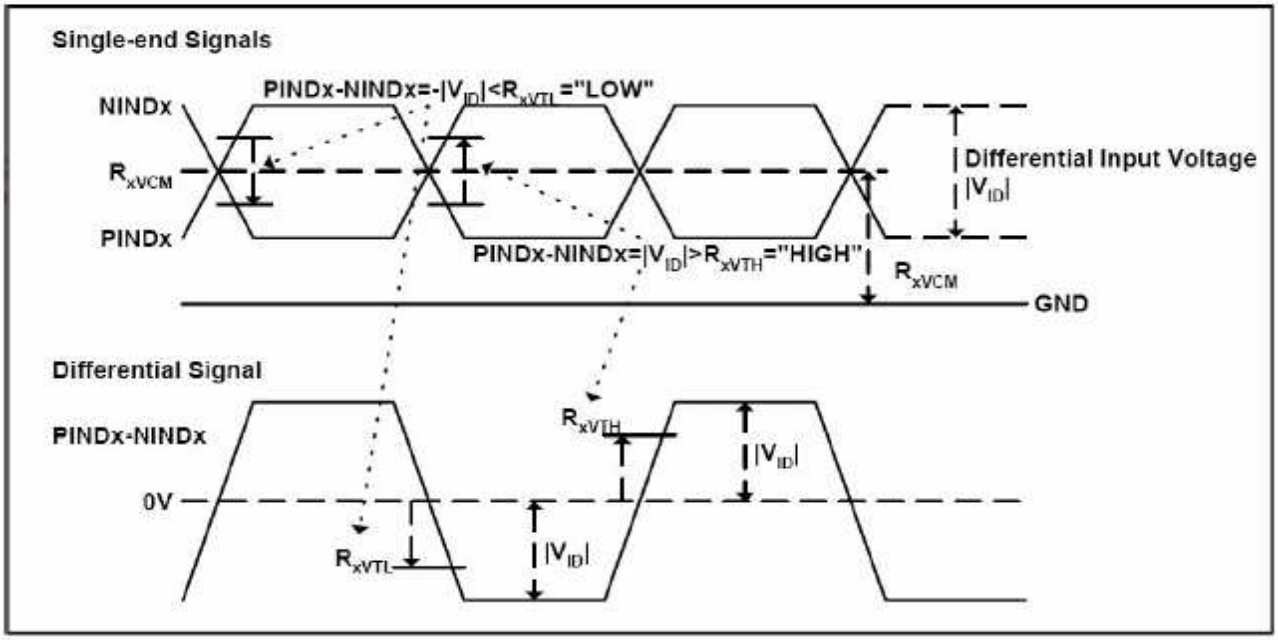

6.1. Timing

Item	Symbol	Values			Unit	Remark
		Min.	Typ.	Max.		
Clock Frequency	fclk	40.8	51.2	67.2	MHz	Frame rate =60Hz
Horizontal display area	thd		1024		DCLK	
HS period time	th	1114	1344	1400	DCLK	
HS Blanking	thb	90	320	376	DCLK	
Vertical display area	tvd		600		H	
VS period time	tv	610	634	800	H	
VS Blanking	thb	10	35	200	H	

6.2. Data Input Format

6bit LVDS input

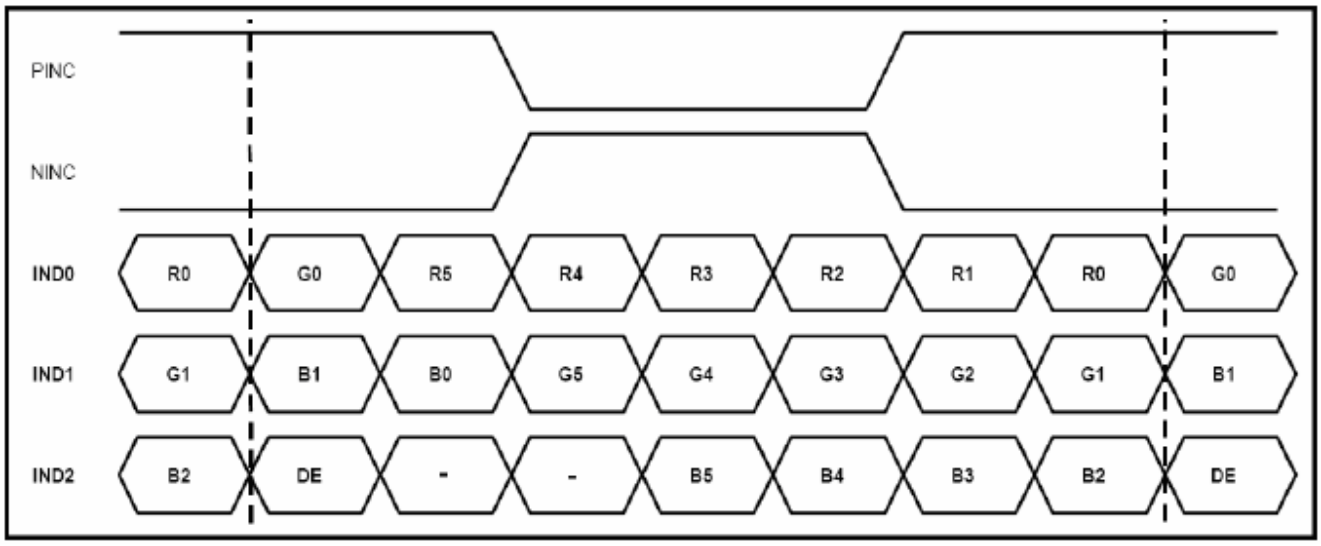

8bit LVDS input

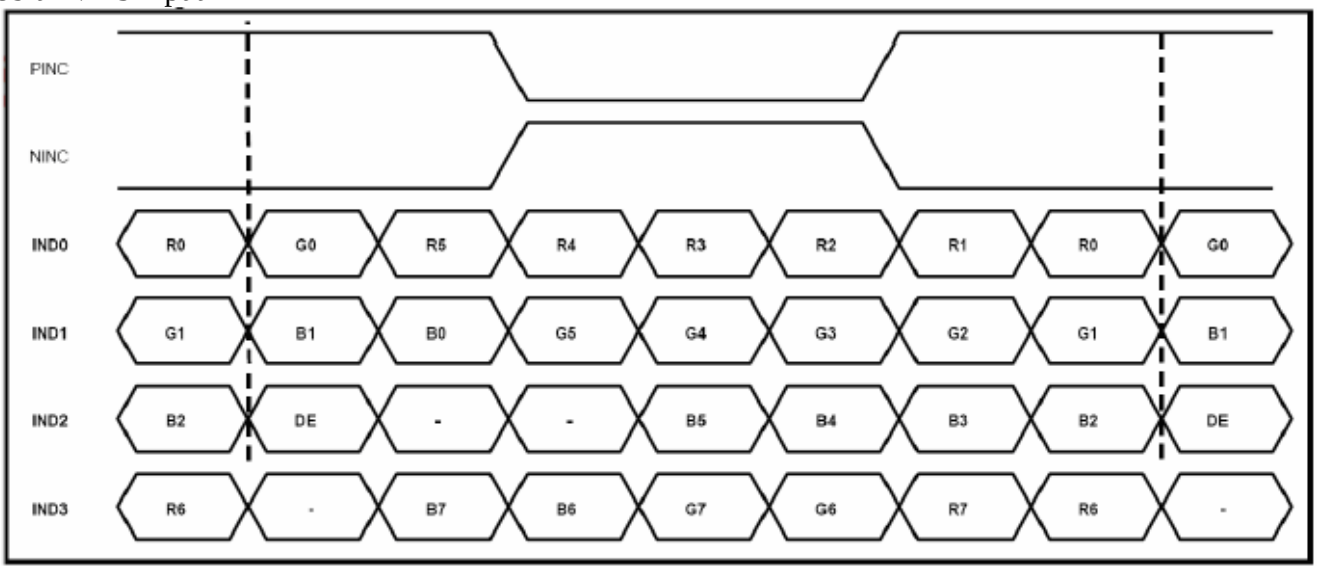

Note: Support DE timing mode only, SYNC mode not supported.

7.AC Characteristics

Parameter	Symbol	Values			Unit	Remark
		Min.	Typ	Max.		
Clock frequency	RxFCLK	40.8	51.2	67.2	MHz	
Input data skew margin	TRSKM	500			ps	
Clock high time	TLVCH		4/(7* RxFCLK)		ns	
Clock low time	TLVCL		3/(7* RxFCLK)		ns	

7.1. Input Clock and Data Timing Diagram

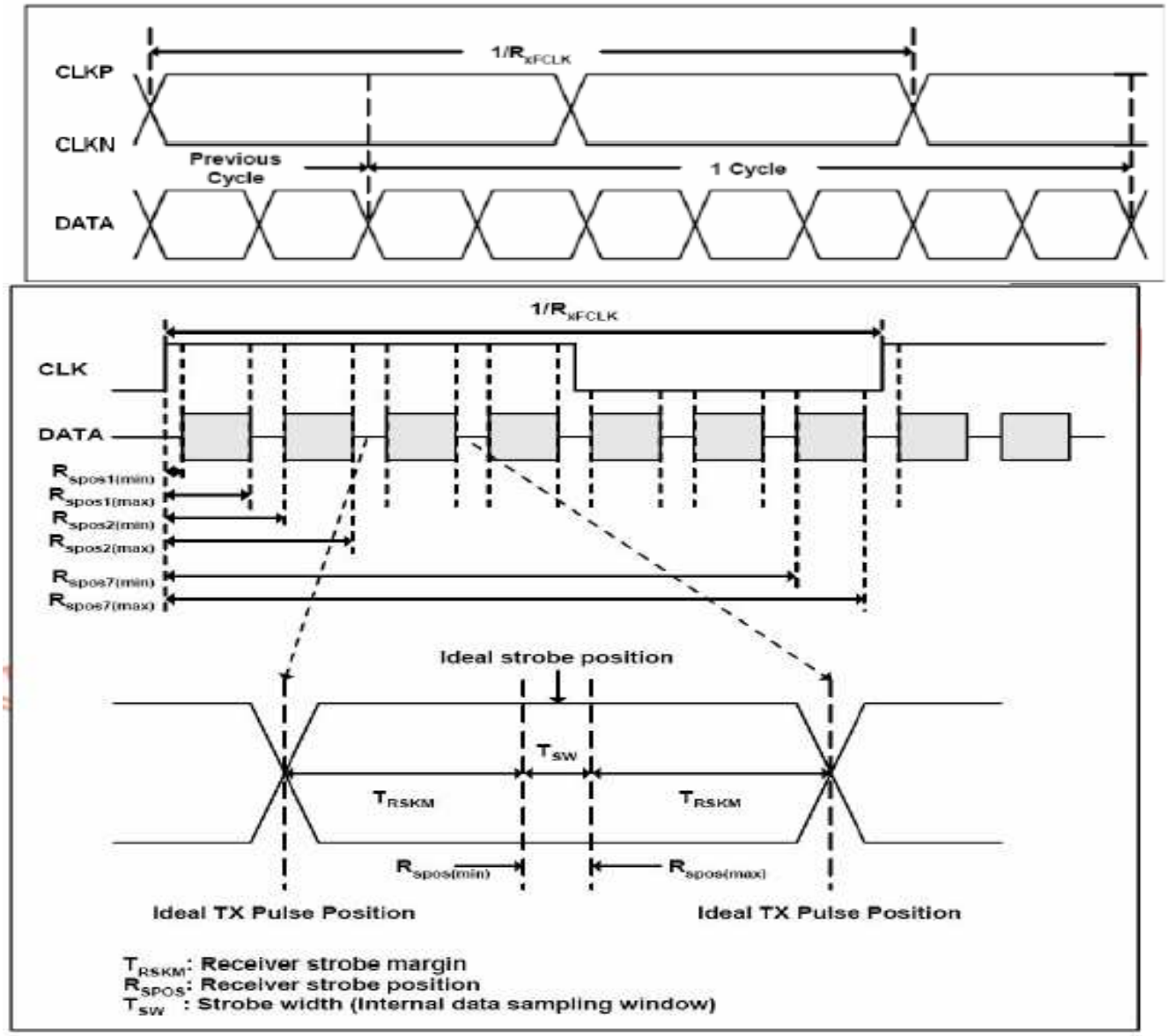

8.Optical Characteristics

Item		Symbol	Condition.	Min	Typ.	Max.	Unit	Remark
Response time		Tr	θ =0°、Φ =0°	-	10	20	.ms	Note 3,5
		Tf		-	15	30	.ms	
Contrast ratio		CR	At optimized viewing angle	500	700	-	-	Note 4,5
Color Chromaticity	White	Wx	θ =0°、Φ =0	0.26	0.31	0.36		Note 2,6,7
		Wy		0.28	0.33	0.38		
Viewing angle	Hor.	ΘR	CR≧10	65	75	-	Deg.	Note 1
		ΘL		65	75	-		
	Ver.	ΦT		60	70	-		
		ΦB		65	75	-		
Brightness		-	-	200	250	-	cd/㎡	Center of display

Ta=25±2℃, IL=20mA

Note 1: Definition of viewing angle range

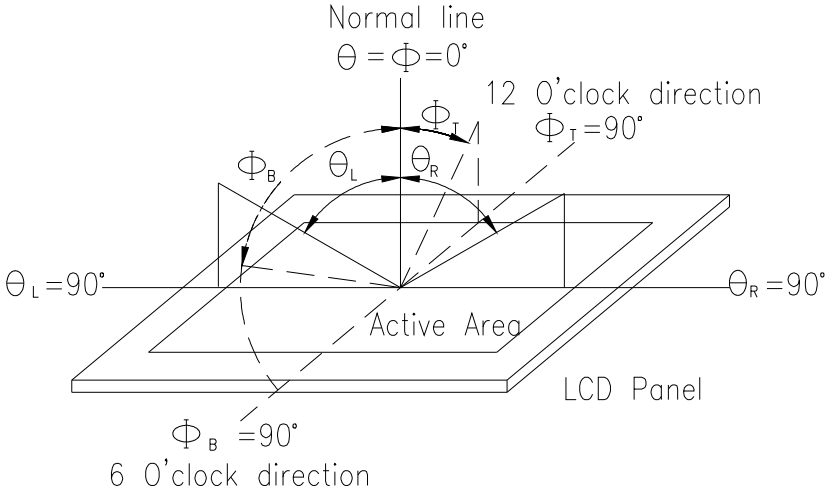

Fig. 8.1. Definition of viewing angle

Note 2: Test equipment setup:

After stabilizing and leaving the panel alone at a driven temperature for 10 minutes, the measurement should be executed. Measurement should be executed in a stable, windless, and dark room. Optical specifications are measured by Topcon BM-7or BM-5 luminance meter 1.0° field of view at a distance of 50cm and normal direction.

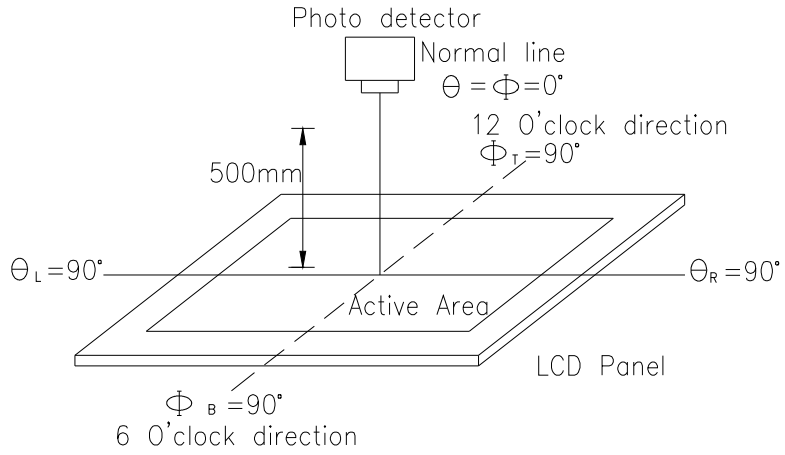

Fig. 8.2. Optical measurement system setup

Note 3: Definition of Response time:
The response time is defined as the LCD optical switching time interval between “White” state and “Black” state. Rise time, Tr, is the time between photo detector output intensity changed from 90%to 10%. And fall time, Tf, is the time between photo detector output intensity changed from 10%to 90%

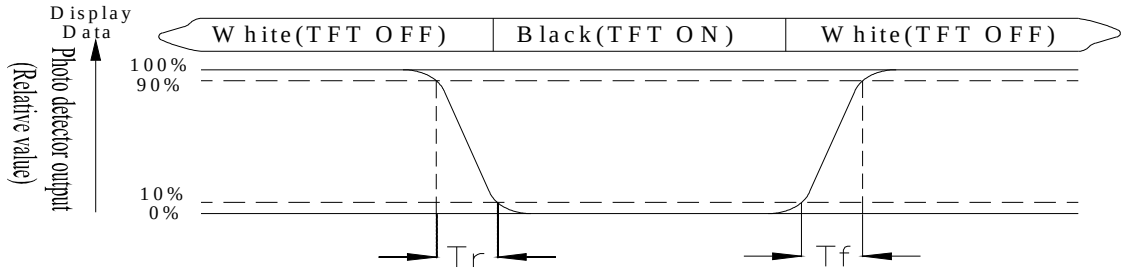

Note 4: Definition of contrast ratio:
The contrast ratio is defined as the following expression.

$$\text{Contrast ratio (CR)} = \frac{\text{Luminance measured when LCD on the "White" state}}{\text{Luminance measured when LCD on the "Black" state}}$$

Note 5: White Vi = Vi50 ± 1.5V
Black Vi = Vi50 ± 2.0V
“±” means that the analog input signal swings in phase with VCOM signal.
“±” means that the analog input signal swings out of phase with VCOM signal.
The 100% transmission is defined as the transmission of LCD panel when all the input terminals of module are electrically opened.

Note 6: Definition of color chromaticity (CIE 1931)
Color coordinates measured at the center point of LCD

Note 7: Measured at the center area of the panel when all the input terminals of LCD panel are electrically opened.

9.Interface

FPC Connector is used for the module electronics interface. The recommended model is FH12A-40S-0.5SH manufactured by Hirose.

.	Symbol	I/O	Function	Remark
1	VCOM	P	Common Voltage	
2	VDD	P	Power Voltage for digital circuit	
3	VDD	P	Power Voltage for digital circuit	
4	NC	---	No connection	
5	Reset	I	Global reset pin	
6	STBYB	I	Standby mode, Normally pulled high STBYB = “1”, normal operation STBYB = “0”, timing controller, source driver will turn off, all output are High-Z	
7	GND	P	Ground	
8	RXIN0-	I	-LVDS differential data input	
9	RXIN0+	I	+ LVDS differential data input	
10	GND	P	Ground	
11	RXIN1-	I	-LVDS differential data input	
12	RXIN1+	I	+ LVDS differential data input	
13	GND	P	Ground	
14	RXIN2-	I	-LVDS differential data input	
15	RXIN2+	I	+ LVDS differential data input	
16	GND	P	Ground	
17	RXCLKIN-	I	-LVDS differential clock input	
18	RXCLKIN+	I	+ LVDS differential clock input	
19	GND	P	Ground	
20	RXIN3-	I	-LVDS differential data input	
21	RXIN3+	I	+ LVDS differential data input	
22	GND	P	Ground	
23	NC	---	No connection	
24	NC	---	No connection	

25	GND	P	Ground	
26	NC	---	No connection	
27	DIMO	O	Backlight CABC controller signal output	
28	SELB	I	6bit/8bit mode select	Note1
29	AVDD	P	Power for Analog Circuit	
30	GND	P	Ground	
31	LED-	P	LED Cathode	
32	LED-	P	LED Cathode	
33	L/R	I	Horizontal inversion	Note3
34	U/D	I	Vertical inversion	Note3
35	VGL	P	Gate OFF Voltage	
36	CABCEN1	I	CABC H/W enable	Note2
37	CABCEN0	I	CABC H/W enable	Note2
38	VGH	P	Gate ON Voltage	
39	LED+	P	LED Anode	
40	LED+	P	LED Anode	

I: input, O: output, P: Power

Note1: If LVDS input data is 6 bits ,SELB must be set to High;
If LVDS input data is 8 bits ,SELB must be set to Low.

Note2: When CABC_EN=”00”, CABC OFF.
When CABC_EN=”01”, user interface image.
When CABC_EN=”10”, still picture.
When CABC_EN=”11”, moving image.
When CABC off, don’t connect DIMO, else connect it to backlight.

Note3: When L/R=”0”, set right to left scan direction.
When L/R=”1”, set left to right scan direction.
When U/D=”0”, set top to bottom scan direction.
When U/D=”1”, set bottom to top scan direction.

Note: Definition of scanning direction.
Refer to the figure as below:

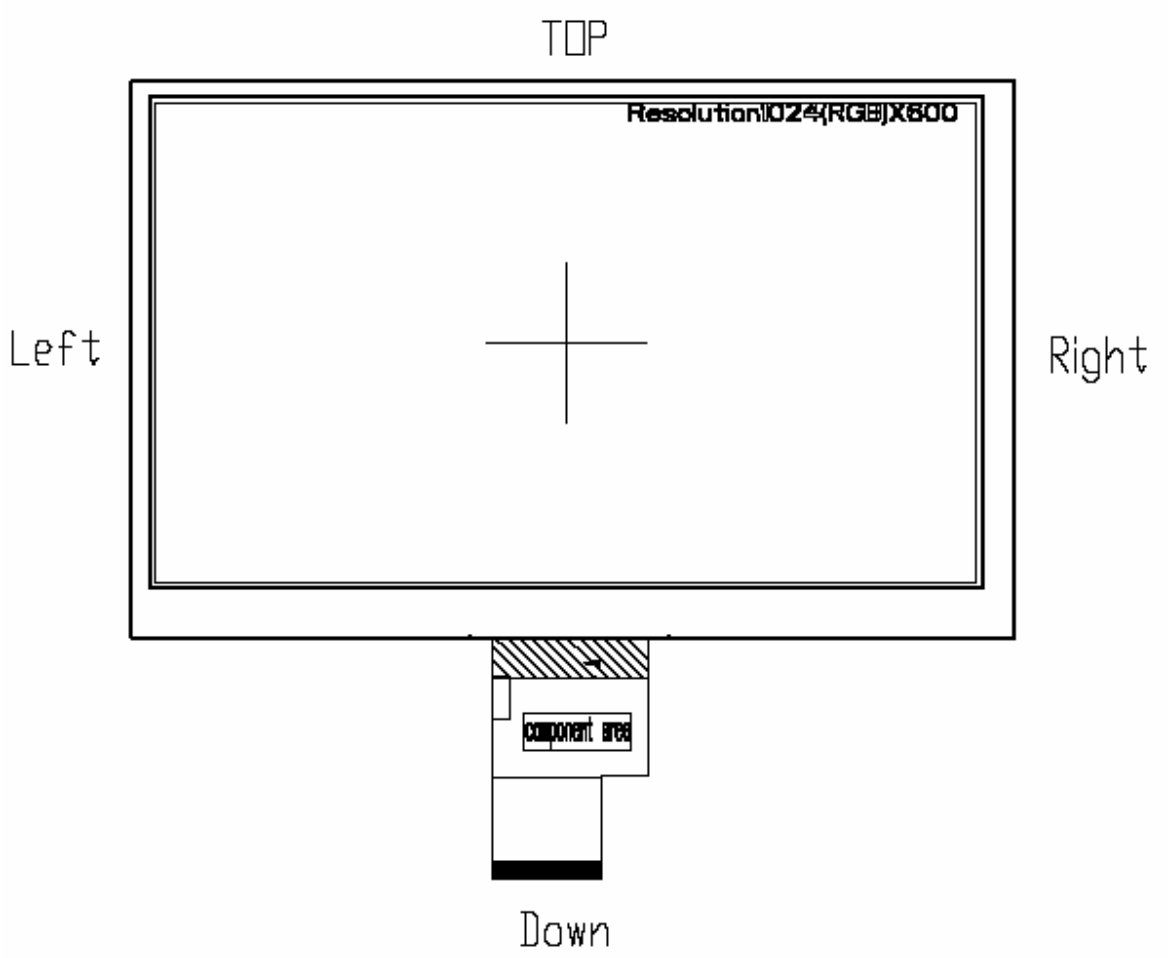

10.Reliability

Content of Reliability Test (Wide temperature, -20℃~60℃)

Environmental Test			
Test Item	**Content of Test**	**Test Condition**	**Note**
High Temperature storage	Endurance test applying the high storage temperature for a long time.	70℃ 200hrs	2
Low Temperature storage	Endurance test applying the high storage temperature for a long time.	-30℃ 200hrs	1,2
High Temperature Operation	Endurance test applying the electric stress (Voltage & Current) and the thermal stress to the element for a long time.	60℃ 200hrs	——
Low Temperature Operation	Endurance test applying the electric stress under low temperature for a long time.	-20℃ 200hrs	1
High Temperature/ Humidity Operation	The module should be allowed to stand at 60 ℃,90%RH max For 96hrs under no-load condition excluding the polarizer, Then taking it out and drying it at normal temperature.	40℃,90%RH 96hrs	1,2
Thermal shock resistance	The sample should be allowed stand the following 10 cycles of operation -20℃ 25℃ 60℃ 30min 5min 30min 1 cycle	-20℃/60℃ 10 cycles	——
Vibration test	Endurance test applying the vibration during transportation and using.	Total fixed amplitude : 15mm Vibration Frequency : 10~55Hz One cycle 60 seconds to 3 directions of X,Y,Z for Each 15 minutes	3
Static electricity test	Endurance test applying the electric stress to the terminal.	VS=800V, RS=1.5kΩ CS=100pF 1 time	——

Note1: No dew condensation to be observed.

Note2: The function test shall be conducted after 4 hours storage at the normal Temperature and humidity after remove from the test chamber.

Note3: Vibration test will be conducted to the product itself without putting it in a container.

11.Contour Drawing

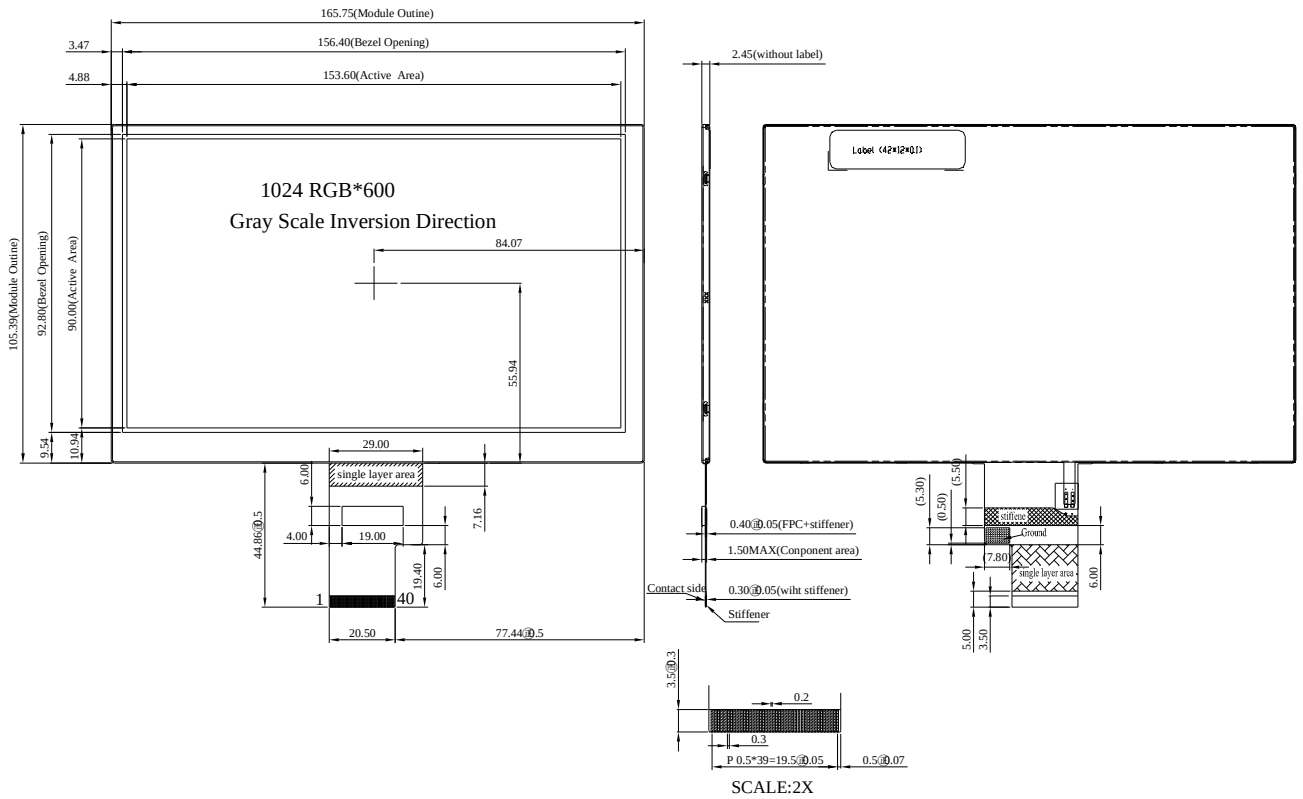

SCALE:2X

PIN NO.	SYMBOL	PIN NO.	SYMBOL
1	VCOM	21	RXIN3+
2	VDD	22	GND
3	VDD	23	NC
4	NC	24	NC
5	RESET	25	GND
6	STBYB	26	NC
7	GND	27	DIMO
8	RXINO-	28	SELB
9	RXINO+	29	AVDD
10	GND	30	GND
11	RXIN1-	31	LED-
12	RXIN1+	32	LED-
13	GND	33	L/R
14	RXIN2-	34	U/D
15	RXIN2+	35	VGL
16	GND	36	CABCEN1
17	RXCLKIN-	37	CABCEN0
18	RXCLKIN+	38	VGH
19	GND	39	LED+
20	RXIN3-	40	LED+

The non-specified tolerance of dimension is ±0.3mm.

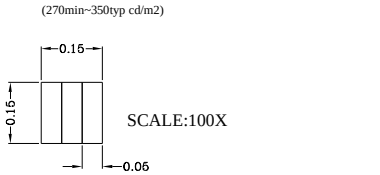

SCALE:100X

winstar **LCM Sample Estimate Feedback Sheet**

Module Number： _____

1、Panel Specification：

1. Panel Type： □ Pass □ NG ,_____
2. View Direction： □ Pass □ NG ,_____
3. Numbers of Dots： □ Pass □ NG ,_____
4. View Area： □ Pass □ NG ,_____
5. Active Area： □ Pass □ NG ,_____
6. Operating Temperature： □ Pass □ NG ,_____
7. Storage Temperature： □ Pass □ NG ,_____
8. Others：_____

2、Mechanical Specification：

1. PCB Size： □ Pass □ NG ,_____
2. Frame Size： □ Pass □ NG ,_____
3. Material of Frame： □ Pass □ NG ,_____
4. Connector Position： □ Pass □ NG ,_____
5. Fix Hole Position： □ Pass □ NG ,_____
6. Backlight Position： □ Pass □ NG ,_____
7. Thickness of PCB： □ Pass □ NG ,_____
8. Height of Frame to PCB： □ Pass □ NG ,_____
9. Height of Module： □ Pass □ NG ,_____
10. Others： □ Pass □ NG ,_____

3、Relative Hole Size：

1. Pitch of Connector： □ Pass □ NG ,_____
2. Hole size of Connector： □ Pass □ NG ,_____
3. Mounting Hole size： □ Pass □ NG ,_____
4. Mounting Hole Type： □ Pass □ NG ,_____
5. Others： □ Pass □ NG ,_____

4、Backlight Specification：

1. B/L Type： □ Pass □ NG ,_____
2. B/L Color： □ Pass □ NG ,_____
3. B/L Driving Voltage (Reference for LED Type)： □ Pass □ NG ,_____
4. B/L Driving Current： □ Pass □ NG ,_____
5. Brightness of B/L： □ Pass □ NG ,_____
6. B/L Solder Method： □ Pass □ NG ,_____
7. Others： □ Pass □ NG ,_____

>> **Go to page 2** <<

5、Electronic Characteristics of Module：

1. Input Voltage： □ Pass □ NG ,_____
2. Supply Current： □ Pass □ NG ,_____
3. Driving Voltage for LCD： □ Pass □ NG ,_____
4. Contrast for LCD： □ Pass □ NG ,_____
5. B/L Driving Method： □ Pass □ NG ,_____
6. Negative Voltage Output： □ Pass □ NG ,_____
7. Interface Function： □ Pass □ NG ,_____
8. LCD Uniformity： □ Pass □ NG ,_____
9. ESD test： □ Pass □ NG ,_____
10. Others： □ Pass □ NG ,_____

6、Summary：

Sales signature：_____

Customer Signature：_____ **Date：** / /