TFT DISPLAY SPECIFICATION



WINSTAR Display Co.,Ltd.

華凌光電股份有限公司

Winstar Display Co., LTD
華凌光電股份有限公司
WEB: https://www.winstar.com.tw E-mail: sales@winstar.com.tw

SPECIFICATION

CUSTOMER : _____

MODULE NO.: WF70C4TIAGDNT0#

APPROVED BY: **(FOR CUSTOMER USE ONLY)**	**PCB VERSION:** **DATA:**

SALES BY	APPROVED BY	CHECKED BY	PREPARED BY
			周园园
ISSUED DATE: 2025/04/24			

TFT Display Inspection Specification: https://www.winstar.com.tw/technology/download.html
Precaution in use of TFT module: https://www.winstar.com.tw/technology/download/declaration.html

WINSTAR DISPLAY Co., Ltd.

Winstar Display Co., LTD
華凌光電股份有限公司

MODLE NO：

RECORDS OF REVISION			DOC. FIRST ISSUE
VERSION	DATE	REVISED PAGE NO.	**SUMMARY**
0	2022/09/13		First issue
A	2022/10/13		Modify Contour Drawing
B	2025/04/24		Modify LED Life Time & Reliability

WINSTAR DISPLAY Co., Ltd.

Contents

1.Module Classification Information

2.Summary

3.General Specifications

4.Absolute Maximum Ratings

5.Electrical Characteristics

6.AC Characteristics

7.Optical Characteristics

8.Interface

9.Block Diagram

10.Reliability

11.Touch Panel Information

12.Contour Drawing

13.Inspection Specification

WINSTAR DISPLAY Co., Ltd.

1.Module Classification Information

W	F	70	C4	T	I	A	G	D	N	T	0	#
①	②	③	④	⑤	⑥	⑦	⑧	⑨	⑩	⑪	⑫	⑬

①	Brand：WINSTAR DISPLAY CORPORATION		
②	Display Type：F→TFT Type, J→Custom TFT		
③	Display Size：7.0” TFT		
④	Model serials no.		
⑤	Backlight Type：	F→CCFL, White S→LED, High Light White	T→LED, White Z→Nichia LED, White
⑥	LCD Polarize Type/ Temperature range/ Gray Scale Inversion Direction	A→Transmissive, N.T, IPS TFT C→Transmissive, N. T, 6:00 ; F→Transmissive, N.T,12:00 ; I→Transmissive, W. T, 6:00 K→Transflective, W.T,12:00 L→Transmissive, W.T,12:00 N→Transmissive, Super W.T, 6:00	Q→Transmissive, Super W.T, 12:00 R→Transmissive, Super W.T, O-TFT V→Transmissive, Super W.T, VA TFT W→Transmissive, Super W.T, IPS TFT X→Transmissive, W.T, VA TFT Y→Transmissive, W.T, IPS TFT Z→Transmissive, W.T, O-TFT
⑦	A：TFT LCD B：TFT+SCREW HOLES+CONTROL BOARD C：TFT+ SCREW HOLES +A/D BOARD D：TFT+ SCREW HOLES +A/D BOARD+CONTROL BOARD E：TFT+ SCREW HOLES +POWER BOARD		F：TFT+CONTROL BOARD G：TFT+ SCREW HOLES H：TFT+D/V BOARD I：TFT+ SCREW HOLES +D/V BOARD J：TFT+POWER BD

⑧ Resolution:

A	128160	B	320234	C	320240	D	480234	E	480272	F	640480
G	800480	H	1024600	I	320480	J	240320	K	800600	L	240400
M	1024768	N	128128	P	1280800	Q	480800	R	640320	S	480128
T	800320	U	8001280	**V**	176220	W	1280398	X	1024250	Y	1920720
Z	800200	2	1024324	3	7201280	4	19201200	5	1366768	6	1280320

⑨ D: Digital L：LVDS M:MIPI

⑩ Interface:

N	Without control board	A	8Bit	B	16Bit	H	HDMI
I	I2C Interface	R	RS232	S	SPI Interface	U	USB

⑪ TS:

N	Without TS	T	Resistive touch panel	C	Capacitive touch panel (G-F-F)
G	Capacitive touch panel (G-G)	C1	Capacitive touch panel (G-F-F)+OCA		
C2	Capacitive touch panel (G-F-F)+OCR	G1	Capacitive touch panel (G-G)+OCA		
G2	Capacitive touch panel (G-G)+OCR	B	CTP+GG+USB		

⑫	Version: X:Raspberry pi	
⑬	Special Code	#:Fit in with ROHS directive regulations

WINSTAR DISPLAY Co., Ltd.

WINSTAR DISPLAY Co., Ltd.

2.Summary

TFT 7.0”is a TN transmissive type color active matrix TFT liquid crystal display that use amorphous silicon TFT as switching devices. This module is a composed of a TFT_LCD module, It is usually designed for industrial application and this module follows RoHs.

WINSTAR DISPLAY Co., Ltd.

3.General Specifications

Item	Dimension	Unit
Size	7.0	inch
Dot Matrix	800 x RGBx480(TFT)	dots
Module dimension	165.0(W) x 104.6(H) x9.83(MAX)(D)	mm
Active area	152.4 x 91.44	mm
Pixel pitch	0.1905x 0.1905	mm
LCD type	TFT, Normally White, Transmissive	
View Direction	12 o'clock	
Gray Scale Inversion Direction	6 o'clock	
Aspect Ratio	16:9	
Backlight Type	LED,Normally White	
TFT Interface	18-bit RGB	
With /Without TP	With RTP	
Surface	Anti-Glare	

*Color tone slight changed by temperature and driving voltage.

WINSTAR DISPLAY Co., Ltd.

4.Absolute Maximum Ratings

Item	Symbol	Min	Typ	Max	Unit
Operating Temperature	TOP	-20	—	+70	℃
Storage Temperature	TST	-30	—	+80	℃

Note: Device is subject to be damaged permanently if stresses beyond those absolute maximum ratings listed above

1. Temp. ≦ 60℃, 90% RH MAX. Temp.＞60℃, Absolute humidity shall be less than 90% RH at 60℃

WINSTAR DISPLAY Co., Ltd.

5.Electrical Characteristics

5.1. Operating conditions:

Item	Symbol	Condition	Min	Typ	Max	Unit
Supply Voltage For LCM	Vcc	-	3.0	3.3	3.6	V
Supply Current For LCM	Icc	Black Pattern	-	140	210	mA

Note 1 : This value is test for VCC=3.3V , Ta=25℃ only

5.2. LED driving conditions

Parameter	Symbol	Min.	Typ.	Max.	Unit	Remark
LED current	-	-	160	200	mA	-
Power Consumption	VBL+=9.8V		1568	-	mW	-
LED voltage	VBL+	8.4	9.8	11	V	Note 1
LED Life Time	-	50,000	-	-	Hr	Note 2,3,4

Note 1 : There are 1 Groups LED

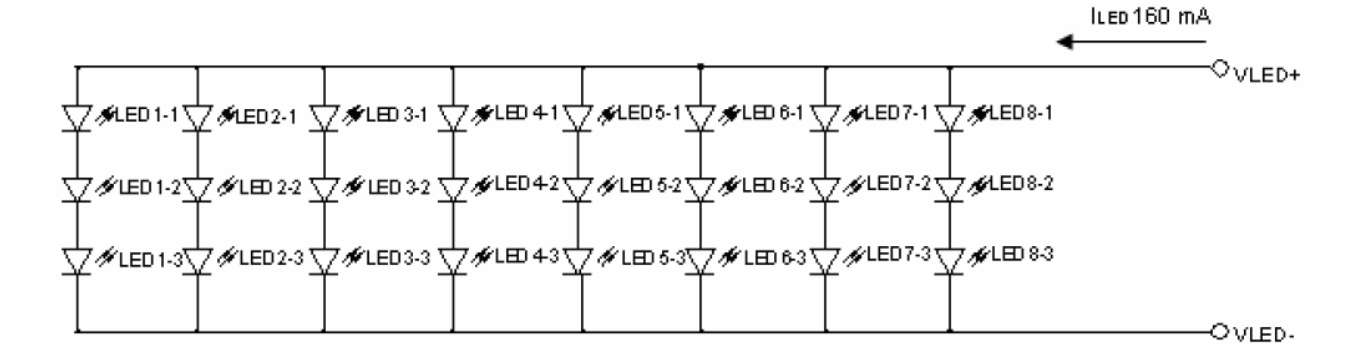

Note 2 : Ta = 25 ℃
Note 3 : Brightness to be decreased to 50% of the initial value
Note 4 : The single LED lamp case

WINSTAR DISPLAY CO.,Ltd.

6.AC Charateristics

6.1. AC Electrical CHARATERISTICS

Item	Symbol	Values			Unit	Remark
		Min.	Typ.	Max.		
HS setup time	T_{hst}	8	-	-	ns	
HS hold time	T_{hhd}	8	-	-	ns	
VS setup time	T_{vst}	8	-	-	ns	
VS hold time	T_{vhd}	8	-	-	ns	
Data setup time	T_{dsu}	8	-	-	ns	
Data hole time	T_{dhd}	8	-	-	ns	
DE setup time	T_{esu}	8	-	-	ns	
DE hole time	T_{ehd}	8	-	-	ns	
DV_{DD} Power On Slew rate	T_{POR}	-	-	20	ms	From 0 to 90% DV_{DD}
RESET pulse width	T_{Rst}	1	-	-	ms	
DCLK cycle time	T_{cph}	20	-	-	ns	
DCLK pulse duty	T_{cwh}	40	50	60	%	

WINSTAR DISPLAY Co.,Ltd.

6.2. Clock and Data input waveforms

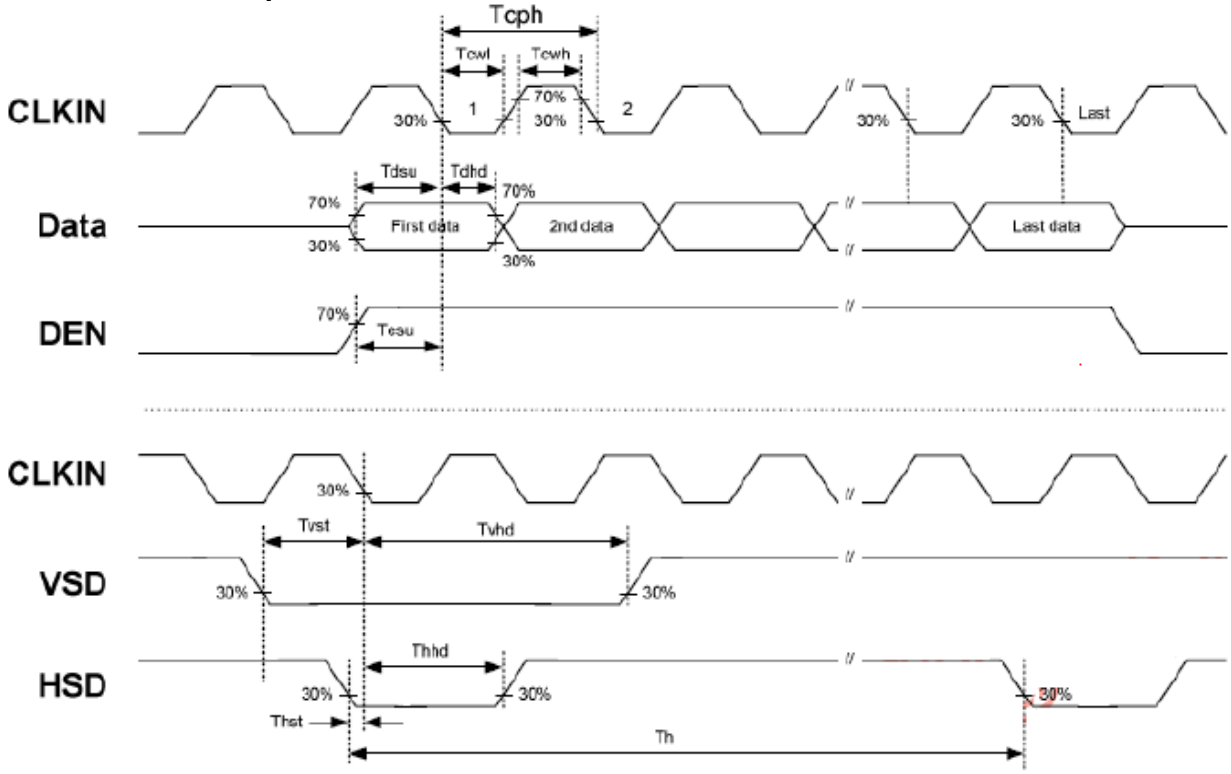

6.3. Timing

Item	Symbol	Values			Unit	Remark
		Min.	Typ.	Max.		
Horizontal Display Area	thd	-	800	-	DCLK	
DCLK Frequency	fclk	26.4	33.3	46.8	MHz	
One Horizontal Line	th	862	1056	1200	DCLK	
HS pulse width	thpw	1	6	40	DCLK	
HS Blanking	thb	46	46	46	DCLK	
HS Front Porch	thfp	16	204	354	DCLK	

WINSTAR DISPLAY

Item	Symbol	Values			Unit	Remark
		Min.	Typ.	Max.		
Vertical Display Area	tvd	-	480	-	TH	
VS period time	tv	510	525	650	TH	
VS pulse width	tvpw	1	3	20	TH	
VS Blanking	tvb	23	23	23	TH	
VS Front Porch	tvfp	7	22	147	TH	

Note: Frame rate is 60±5Hz

6.4. Data input format

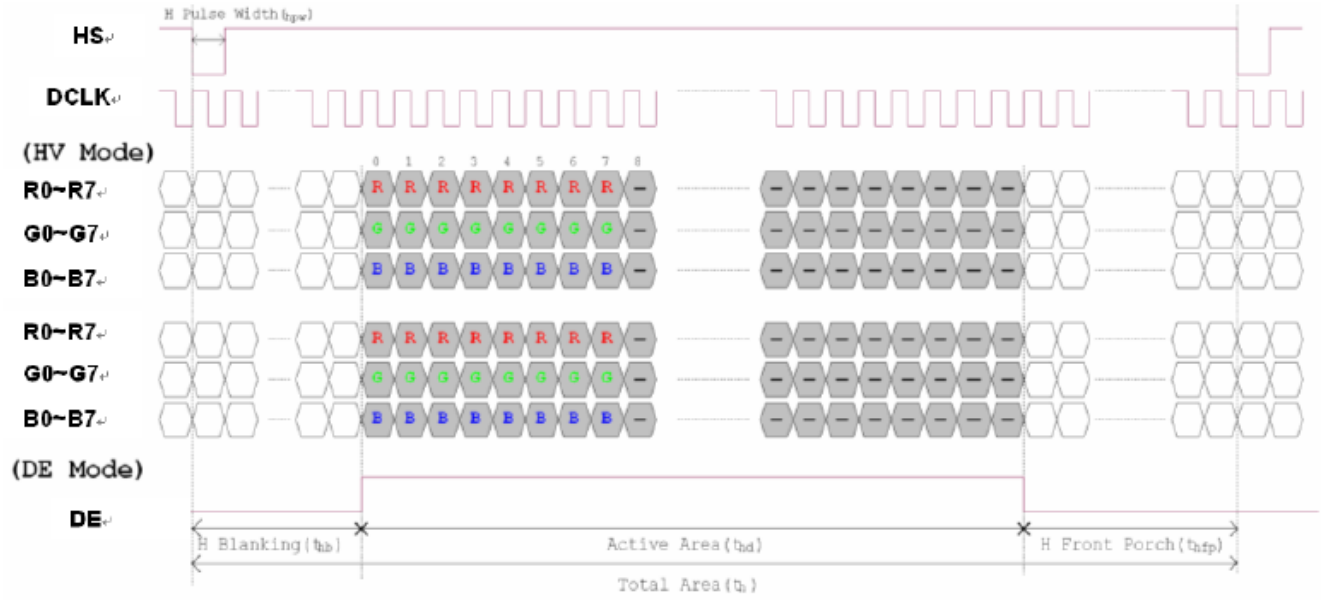

Figure 3. 1 Horizontal input timing diagram.

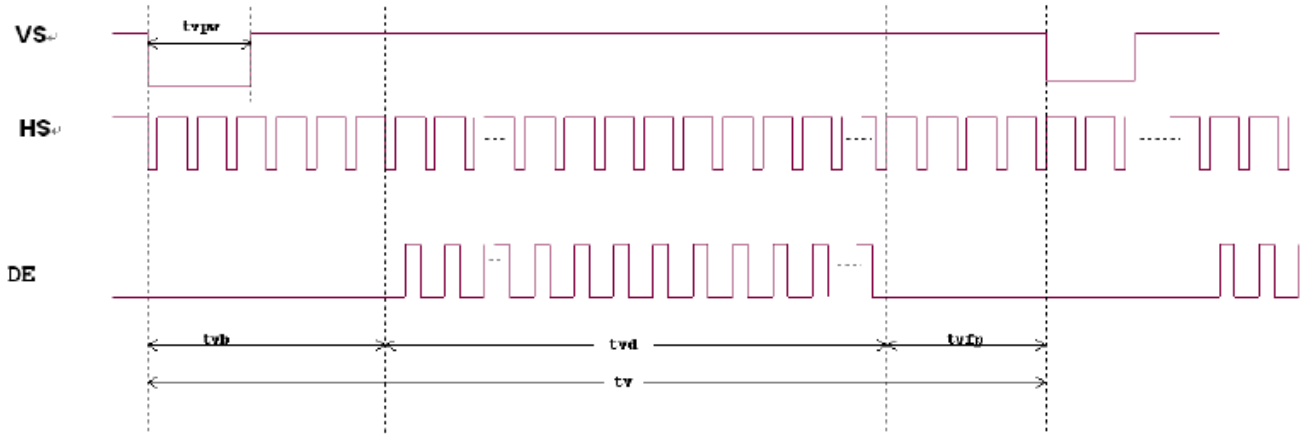

Figure 3. 2 Vertical input timing diagram.

6.5. Power ON/OFF sequence

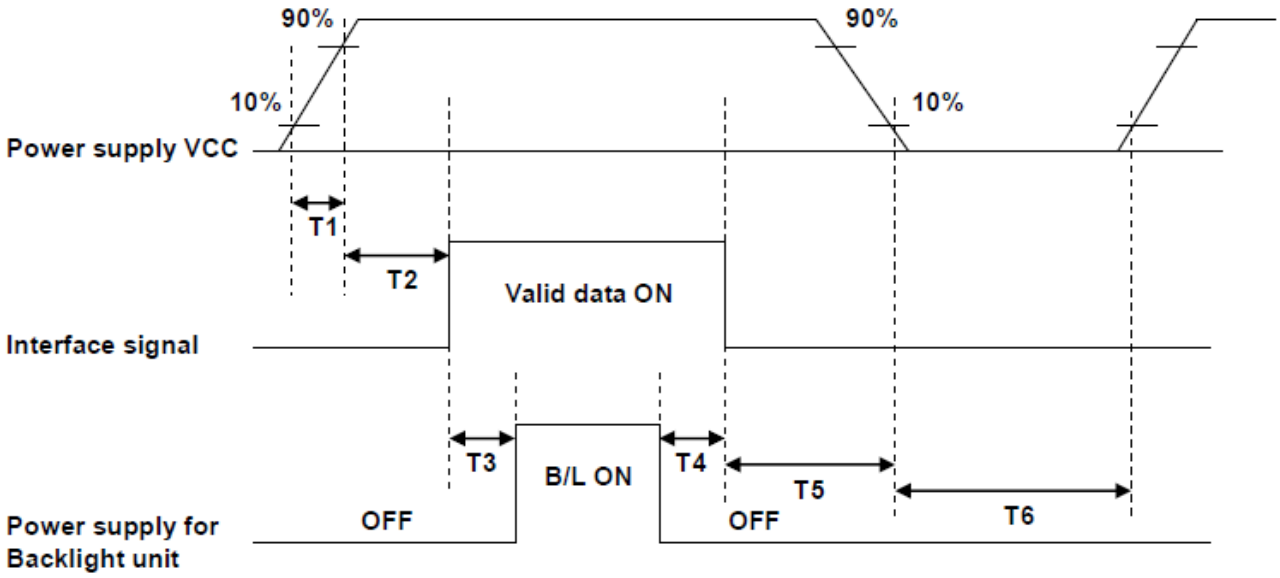

Parameter	SPEC.			Unit
	Min.	Typ.	Max.	
T1	1		2	ms
T2	200			ms
T3	180			ms
T4	180			ms
T5	200			ms
T6	1000			ms

7.Optical Characteristics

TFT LCD characteristic

Item		Symbol	Condition.	Min	Typ.	Max.	Unit	Remark
Response time		Tr+ Tf	θ=0°、Φ=0°		25	50	.ms	Note 3
Contrast ratio		CR	At optimized viewing angle	700	1000	-	-	Note 4
Color Chromaticity	White	Wx	θ=0°、Φ=0	0.26	0.31	0.36		Note 2,6,7
		Wy		0.28	0.33	0.38		
Viewing angle (Gray Scale Inversion Direction)	Hor.	ΘR	CR≧10	60	70	-	Deg.	Note 1
		ΘL		60	70	-		
	Ver.	ΦT		50	60	-		
		ΦB		60	70	-		
Brightness		-	-	200	350	-	cd/m2	Center of display
Uniformity		(U)	-	70	-	-	%	Note 5

Ta=25±2℃, ILED = 160mA

Note 1: Definition of viewing angle range

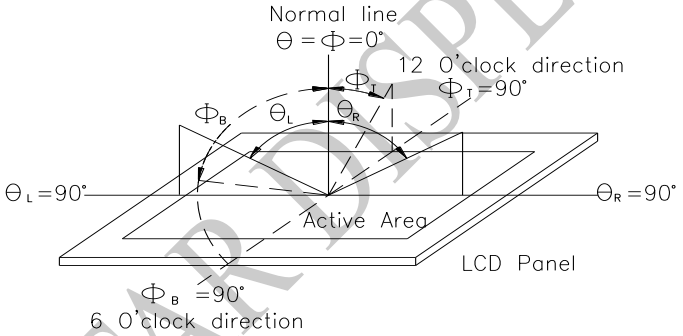

Fig.7.1. Definition of viewing angle

Note 2: Test equipment setup:

After stabilizing and leaving the panel alone at a driven temperature for 10 minutes, the measurement should be executed. Measurement should be executed in a stable, windless, and dark room. Optical specifications are measured by Topcon BM-7orBM-5 luminance meter 1.0° field of view at a distance of 50cm and normal direction.

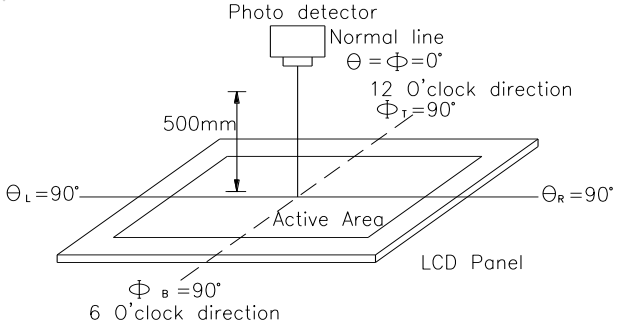

Fig. 7.2. Optical measurement system setup

Note 3: Definition of Response time:

WINSTAR DISPLAY Co.,Ltd.

The response time is defined as the LCD optical switching time interval between “White” state and “Black” state. Rise time, Tr, is the time between photo detector output intensity changed from 90%to 10%. And fall time, Tf, is the time between photo detector output intensity changed from 10%to 90%

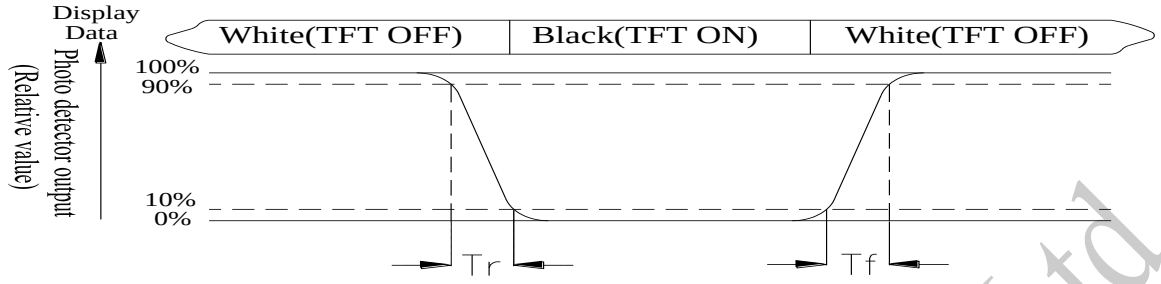

Note 4: Definition of contrast ratio:
The contrast ratio is defined as the following expression.

$$\text{Contrast ratio (CR)} = \frac{\text{Luminance measured when LCD on the "White" state}}{\text{Luminance measured when LCD on the "Black" state}}$$

Note 5: Definition of Luminance Uniformity
Active area is divided into 9 measuring areas (reference the picture in below). Every measuring point is placed at the center of each measuring area.
Luminance Uniformity (U) = Lmin/Lmax x100%
L = Active area length
W = Active area width

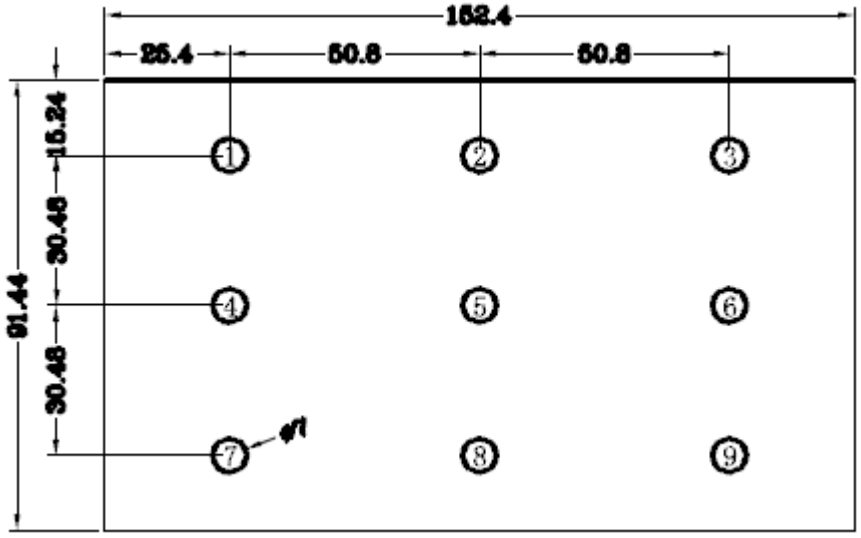

Fig7.3. Definition of uniformity

Note 6: Definition of color chromaticity (CIE 1931)
Color coordinates measured at the center point of LCD

Note 7: Measured at the center area of the panel when all the input terminals of LCD panel are electrically opened.

8.Interface

8.1. LCM PIN Definition

Pin	Symbol	Function	Remark
1	GND	Power Ground	
2	GND	Power Ground	
3	NC	Not Connect	
4	Vcc	Power Supply for Digital Circuit	
5	Vcc	Power Supply for Digital Circuit	
6	Vcc	Power Supply for Digital Circuit	
7	Vcc	Power Supply for Digital Circuit	
8	NC	Not Connect	
9	DE	Data Enable	
10	GND	Power Ground	
11	GND	Power Ground	
12	GND	Power Ground	
13	B5	Blue Data 5 (MSB)	
14	B4	Blue Data 4	
15	B3	Blue Data 3	
16	GND	Power Ground	
17	B2	Blue Data 2	
18	B1	Blue Data 1	
19	B0	Blue Data 0 (LSB)	
20	GND	Power Ground	
21	G5	Green Data 5 (MSB)	
22	G4	Green Data 4	
23	G3	Green Data 3	
24	GND	Power Ground	
25	G2	Green Data 2	
26	G1	Green Data 1	
27	G0	Green Data 0(LSB)	
28	GND	Power Ground	
29	R5	Red Data 5 (MSB)	
30	R4	Red Data 4	

WINSTAR DISPLAY Co., Ltd.

31	R3	Red Data 3	
32	GND	Power Ground	
33	R2	Red Data 2	
34	R1	Red Data 1	
35	R0	Red Data 0(LSB)	
36	GND	Power Ground	
37	GND	Power Ground	
38	DCLK	Clock Signals ; Latch Data at the Falling Edge (CLK)	
39	GND	Power Ground	
40	GND	Power Ground	

8.2. Backlight Driving Part

Pin No.	Symbol	Description
1	VLED+	Red, LED_ Anode
2	VLED-	White, LED_ Cathode

Note: The backlight interface connector is a model SM02B-BHSS-1-TB manufactured by JST or equivalent. The matching connector part number is BHSR-20VS-1 manufactured by JST or equivalent.

WINSTAR DISPLAY CO., Ltd.

9.Block Diagram

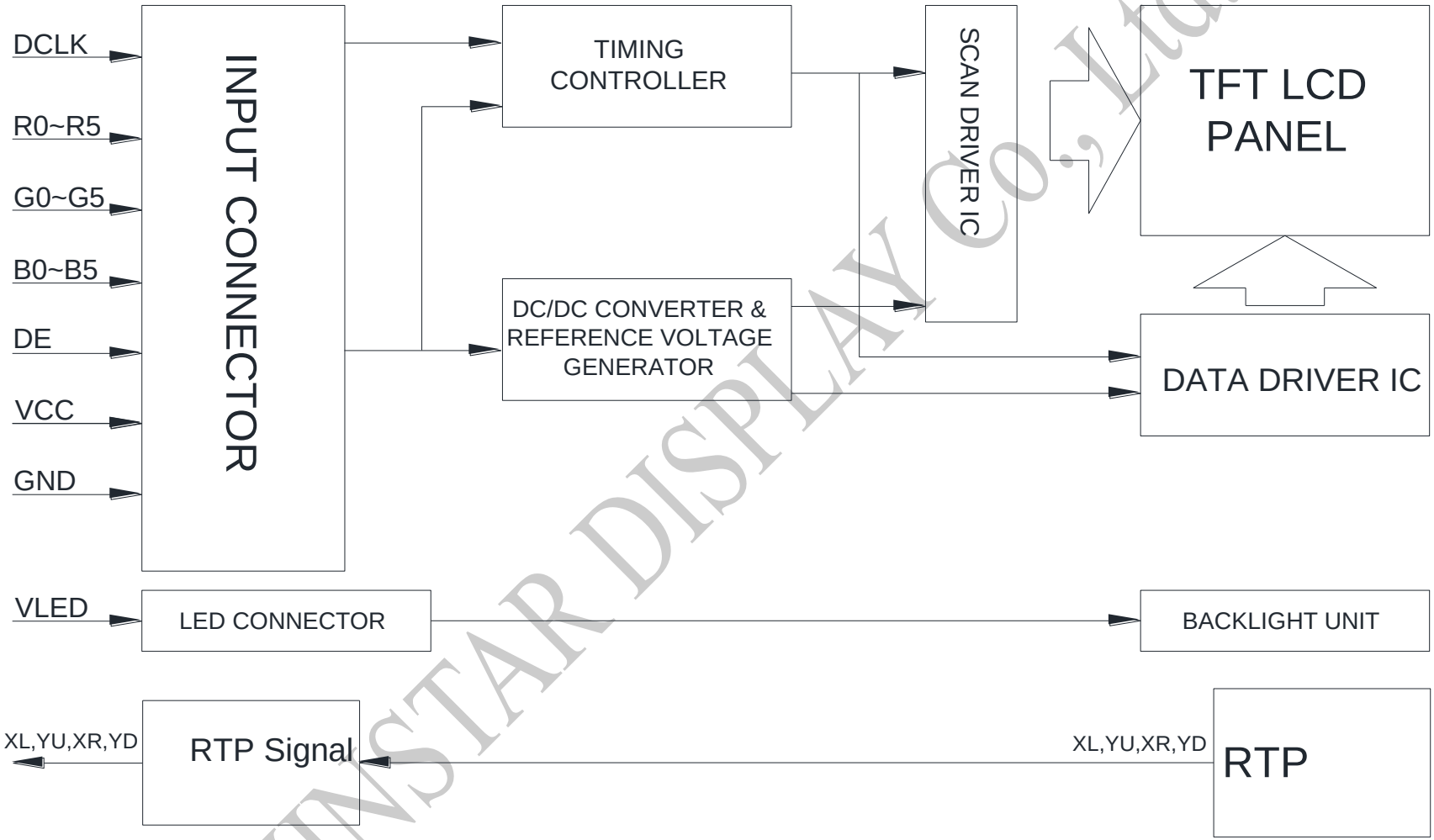

WINSTAR DISPLAY Co., Ltd.

10.Reliability

Content of Reliability Test (Wide temperature, -20℃~70℃)

Environmental Test			
Test Item	**Content of Test**	**Test Condition**	**Note**
High Temperature storage	Endurance test applying the high storage temperature for a long time.	80℃ 200hrs	2
Low Temperature storage	Endurance test applying the low storage temperature for a long time.	-30℃ 200hrs	1,2
High Temperature Operation	Endurance test applying the electric stress (Voltage & Current) and the thermal stress to the element for a long time.	70℃ 200hrs	2
Low Temperature Operation	Endurance test applying the electric stress under low temperature for a long time.	-20℃ 200hrs	1,2
High Temperature/ Humidity Operation	The module should be allowed to stand at 60℃,90%RH max	60℃,90%RH 96hrs	1,2
Thermal shock resistance	The sample should be allowed stand the following 10 cycles of operation -20℃ 25℃ 70℃ 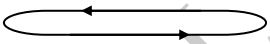 30min 5min 30min 1 cycle	-20℃/70℃ 10 cycles	2
Vibration test	Endurance test applying the vibration during transportation and using.	Total fixed amplitude : 1.5mm Vibration Frequency : 10~55Hz One cycle 60 seconds to 3 directions of X,Y,Z for Each 15 minutes	3
Static electricity test	Endurance test applying the electric stress to the terminal.	VS=±2KV(contact), ±2KV(air), RS=330Ω CS=150pF 10 times	4

Note1: No dew condensation to be observed.

Note2: The function test shall be conducted after 4 hours storage at the normal Temperature and humidity after remove from the test chamber.

Note3: The packing have to including into the vibration testing.

Note4: Endurance test applying the electric stress to the finished product housing

WINSTAR DISPLAY Co., Ltd.

11.Touch Panel Information

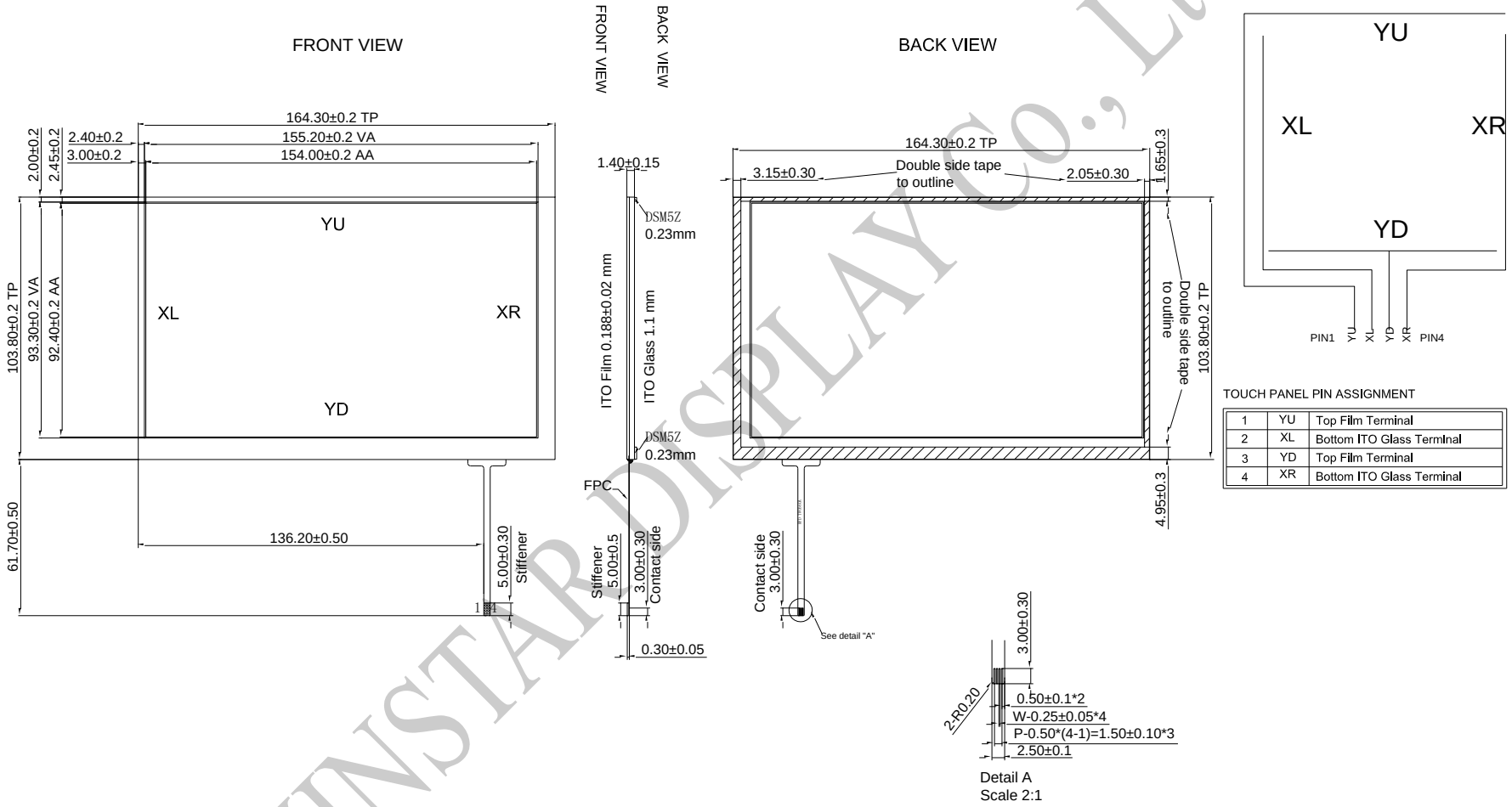

TOUCH PANEL PIN ASSIGNMENT

1	YU	Top Film Terminal
2	XL	Bottom ITO Glass Terminal
3	YD	Top Film Terminal
4	XR	Bottom ITO Glass Terminal

WINSTAR DISPLAY Co., Ltd.

11.1. Resistance Touch Panel General Specifications

Item	Description
Driving condition	DC5V
Operating force	60~150g
Linearity max	≤±1.5%
Insulating resistance	＞20MΩ，25V(DC)
Light transparence	70%
Structure type	ITO Film/ITO Glass(F/G)
Surface Hardness	3H typ
Pen Hitting Durability (with the silicon rubber)	＞1000,000 times
X resistance	200~1200Ω
Y resistance	100~800Ω

WINSTAR DISPLAY Co., Ltd.

12.Contour Drawing

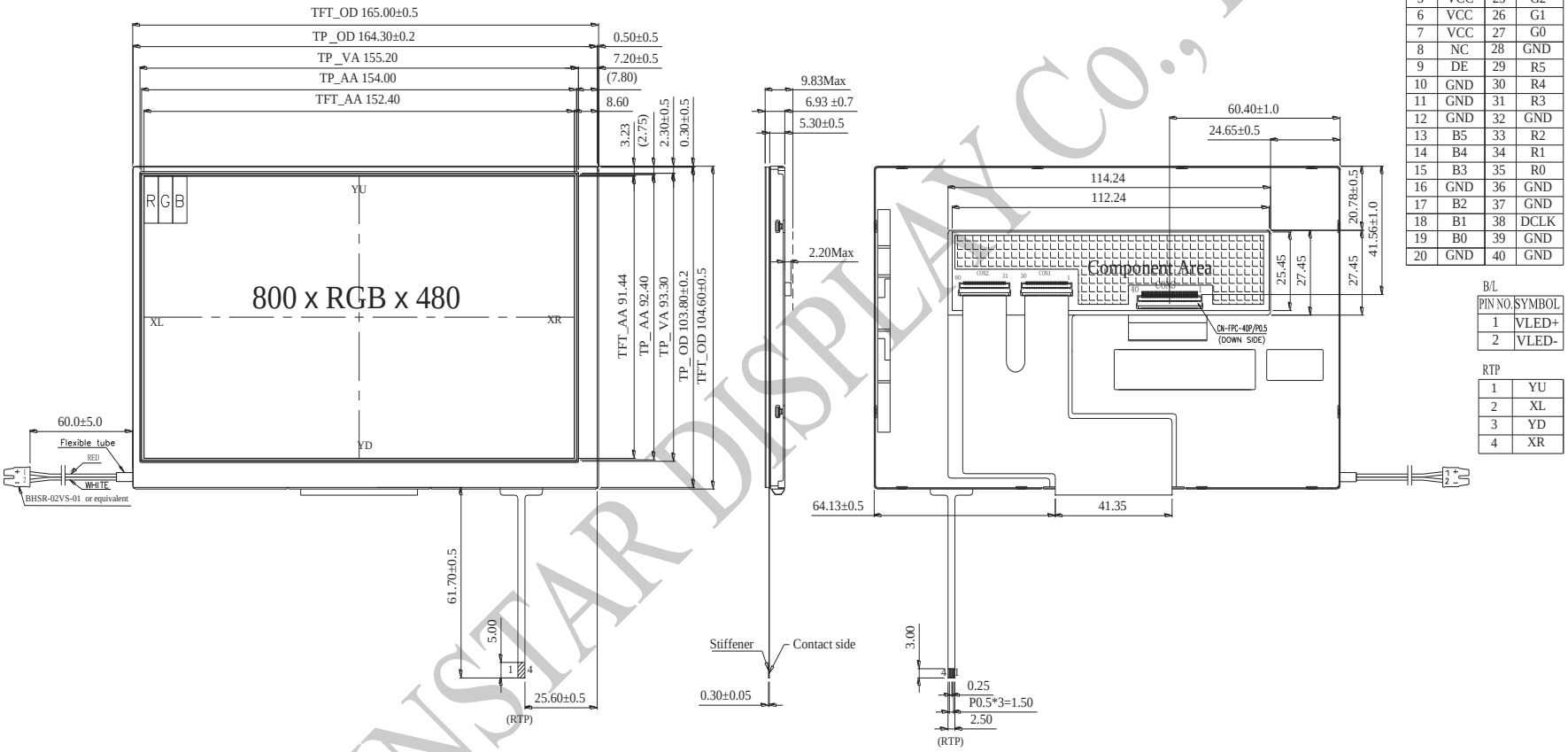

CON3

PIN NO.	SYMBOL	PIN NO.	SYMBOL
1	GND	21	G5
2	GND	22	G4
3	NC	23	G3
4	VCC	24	GND
5	VCC	25	G2
6	VCC	26	G1
7	VCC	27	G0
8	NC	28	GND
9	DE	29	R5
10	GND	30	R4
11	GND	31	R3
12	GND	32	GND
13	B5	33	R2
14	B4	34	R1
15	B3	35	R0
16	GND	36	GND
17	B2	37	GND
18	B1	38	DCLK
19	B0	39	GND
20	GND	40	GND

B/L

PIN NO.	SYMBOL
1	VLED+
2	VLED-

RTP

1	YU
2	XL
3	YD
4	XR

The non-specified tolerance of dimension is ±0.3 mm .

WINSTAR DISPLAY Co., Ltd.

13.檢驗規範(Inspection Specification)

1. 範圍(Scope)：適用於本公司 TFT-LCD 模塊(The document shall be applied to TFT-LCD Module)
2. 檢驗標準(Inspection Standard)：MIL-STD-105E 正常單次抽樣水平 II(MIL-STD-105E Table Normal Inspection Single Sampling Level II)
3. 缺陷水平(Defect Level)：主要缺陷 AQL：0.65;次要缺陷 AQL：2.5(Major Defect AQL:0.65;Minor Defect AQL:2.5)
4. 檢驗條件(Test conditions):

   (1)溫度(Temperature)：15℃~25℃ ；溼度(Humidity)：55 ±15%

   (2)外觀檢驗(Visual inspection)：光照強度：500 Lux 以上;檢查距離：20cm~30cm (Illumination：More than 500 Lux; Inspection Distance: 20cm~30cm)

   (3)電性檢驗(Electrical inspection)：光照強度：100Lux~300Lux;檢查距離：20cm~30cm(Illumination：100Lux~300Lux; Inspection Distance: 20cm~30cm)

   (4)目視角度(Visual angle)：檢查目視的角度是法線方法的 45 º(The test direction is base on about around 45º of Vertical line）

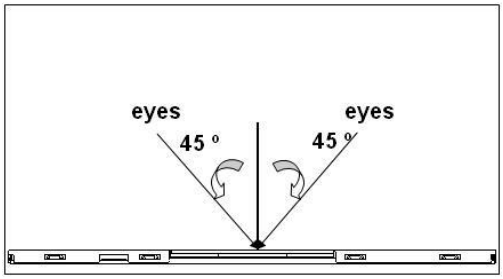

(5)定義區域(Definition of area):

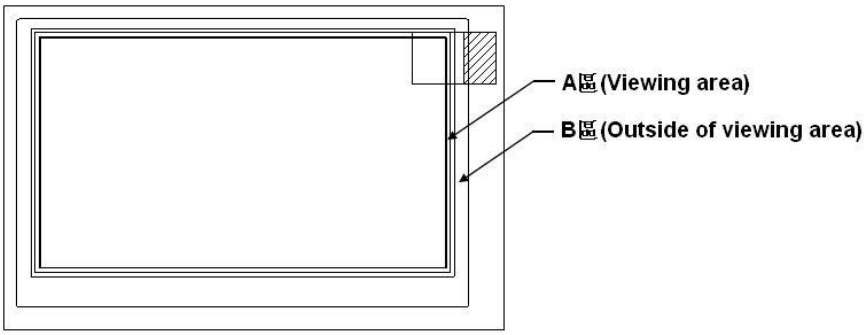

5. 象素定義 (Pixel Definition):

R	G	B	R	G	B	R	G	B		Dot Defect
R	G	B	R	G	B	R	G	B		Adjacent Dot Defect
R	G	B	R	G	B	R	G	B		Cluster

註 1：如果像素或部分子像素缺陷超過受影響像素或子像素面積的 50%，則視為 1 個缺陷。請參考 NO.11 為允許數量和亮點大小判斷標準。

Note 1:If pixel or partial sub-pixel defects exceed 50% of the affected pixel or sub-pixel area, it Shall be considered as1 defect. please refer to NO.11 for the allowable quantity and bright dot Size judgment standards.

註 2：在 2 秒的檢查時間內，通過 5% ND 濾光片不應有明顯的不均勻。

Note 2: There should be no distinct non-uniformity visible through 5% ND Filter within 2 sec inspection times.

註 3：Mura 和亮點通過 5% ND 濾光片檢查。

Note 3: Mura and bright dot inspected through 5% transmission ND Filter as following.

註 4：相鄰 2 個亮點排列的判斷標準如下，請參考 NO.11 為允許數量和亮點大小判斷標準。

Note 4: The judging criteria for the arrangement of 2 adjacent bright dots are as follows, please refer to NO.11 for the allowable quantity and bright dot size judgment standards.

2 dot adjacent is OK	2 dot adjacent vertical is NG	2 dot adjacent slant is NG
		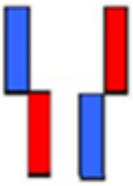

5. 檢驗標準(Inspection Standard)：

<table>
<tr><th>項次
(No)</th><th>檢驗項目(Inspection item)</th><th>檢驗標準(Inspection Standard)</th><th>缺陷等級
(Defect Level)</th></tr>
<tr><td>1</td><td>PACKING
&INDICATE</td><td>1.1.不可有混入其他型號產品的現象(Mixde product types).
1.2.不可有產品漏工序的現象(The part number is inconsistent with work order of production).
1.3.不可有部件裝反方向的現象(Assembled in inverse direction).
1.4.不可有數量與實際要求不一致的現象(The quantity is inconsistent with work order of production).</td><td>主缺
(Maj)</td></tr>
<tr><td>2</td><td>尺寸(Size)</td><td>产品尺寸和结构必须符合结构图(Product size and structure must meet the structure diagram)</td><td>主缺
(Maj)</td></tr>
<tr><td rowspan="3">3</td><td rowspan="3">玻璃裂纹(The crack of glass)</td><td>符號(Symbols):
X:破裂長度(Symbols)
Y:破裂寬度(The width of crack).
Z:破裂厚度(The thickness of crack).
W:出電極區寬度(Terminal length)
T:玻璃厚度(The thickness of glass).
a:LCD 側面長度(LCD side length).</td><td rowspan="3">次缺
(Min)</td></tr>
<tr><td>3.1.一般玻璃破損(General glass chip):
3.1.1.玻璃表面或上、下玻璃組合縫隙之間破損(Chip on panel surface and crack between panels);
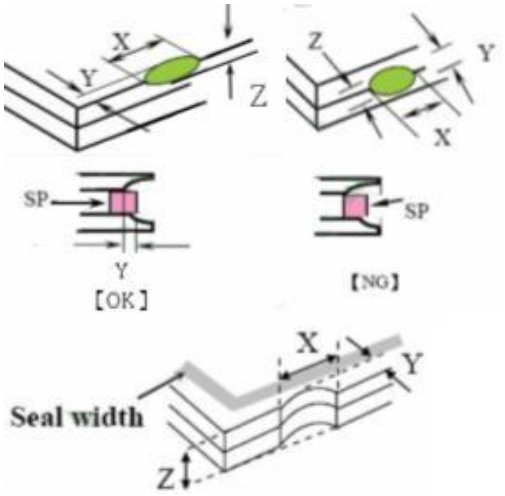

<table>
<tr><th>X</th><th>Y</th><th>Z</th></tr>
<tr><td>≤a</td><td>裂紋進入 VA 區(Crack can't enter viewing area)</td><td>≤1/2t</td></tr>
<tr><td>≤a</td><td>裂紋超過 SP 一半的寬度(Crack can't exceed the half of SP width)</td><td>1/2t＜Z≤2t</td></tr>
</table>
3.1.2.邊角破損(Corner crack)：
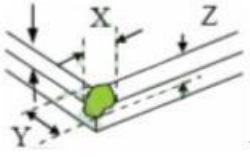
</td></tr>
</table>

項次(No)	檢驗項目(Inspection item)	檢驗標準(Inspection Standard)	缺陷等級(Defect Level)
3	玻璃裂纹(The crack of glass)		次缺(Min)

X	Y	Z
≤1/5a	裂紋進入 VA 區(Crack can't enter viewing area)	≤1/2t
≤1/5a	裂紋超過 SP 一半的寬度(Crack can't exceed the half of SP width)	1/2t＜Z≤2t

3.2.出电极端破损(Protrusion over terminal):

3.2.1.电极垫上破损(Chip on electrode pad):

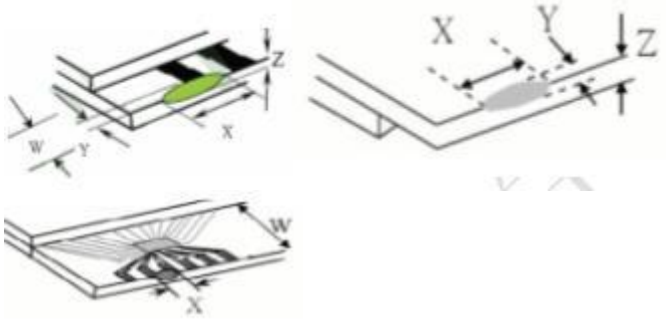

位置(Position)	X	Y	Z
正面(Front)	≤a	≤1/2W	≤t
背面(Back)	≤a	≤W	≤1/2t

3.2.2.出電極端非電極破損(Non-conductive portion):

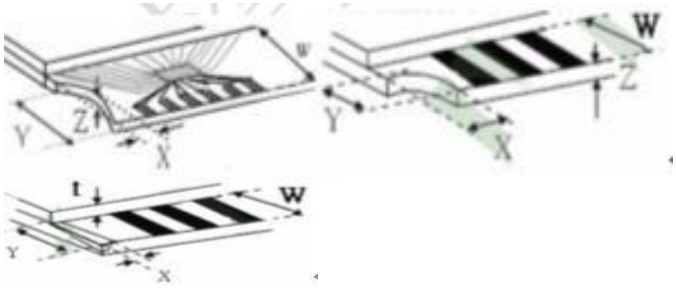

X	Y	Z
≤1/3a	≤W	≤t

備註(Note)：

如果破碎部分触及 ITO 電極則不可超過 ITO 電極寬度的 1/3，且必須進行通電測試，不可影響顯示效果(If the chipped area touches the ITO terminal,over 2/3 of the ITO must remain and be inspected according to electrode terminal specifications).

3.2.3.玻璃破損(Glass remain)：

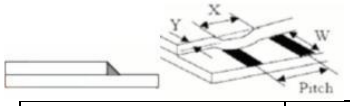

X	Y	Z
≤a	≤1/3W	≤t

<table>
<tr><th>項次
(No)</th><th>檢驗項目(Inspection item)</th><th>檢驗標準(Inspection Standard)</th><th>缺陷等級
(Defect Level)</th></tr>
<tr><td>4</td><td>黑點、白點異物
(Black or white dot)Round type
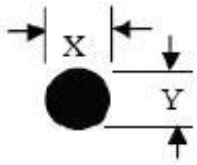</td><td>4.1 Round type:
<table>
<tr><th>尺寸
(Size)</th><th>判定標準(Judging standard)</th><th>允收數量
(Acceptance(Q'ty))</th></tr>
<tr><td colspan="3">Non-display:</td></tr>
<tr><td rowspan="2">7.0”</td><td>D ≤0.30mm</td><td>忽略不計(Ignore)</td></tr>
<tr><td>0.30mm < D ≤ 0.5mm
Distance≥0.5mm</td><td>N≦4</td></tr>
<tr><td colspan="3">Display :</td></tr>
<tr><td rowspan="3">7.0”</td><td>D≦ 0.25mm</td><td>忽略不計(Ignore)</td></tr>
<tr><td>0.25mm＜D≦0.5mm</td><td>N≦4</td></tr>
<tr><td>D＞ 0.5mm</td><td>N≦0</td></tr>
<tr><td colspan="3"></td></tr>
</table></td><td>次缺
(Min)</td></tr>
<tr><td>5</td><td>刮痕、線狀異物
(scratch、contamination)
Line type
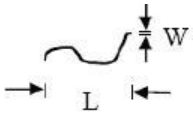</td><td>5.2 Line type: (display):
<table>
<tr><th>尺寸
(Size)</th><th colspan="2">判定標準(Judging standard)</th><th>允收數量
(Acceptance(Q'ty))</th></tr>
<tr><td rowspan="4">7.0”</td><td>W</td><td>L</td><td rowspan="2"></td></tr>
<tr><td>W≦ 0.01mm</td><td>—</td></tr>
<tr><td>0.01mm＜W≦ 0.05mm</td><td>L ≦ 5mm</td><td>N≦4</td></tr>
<tr><td>W ＞ 0.05mm</td><td>L ＞ 5mm</td><td>N≦0</td></tr>
<tr><td colspan="4">Non-display</td></tr>
<tr><td rowspan="4">7.0”</td><td>W</td><td>L</td><td></td></tr>
<tr><td>W≦ 0.01mm</td><td>—</td><td>忽略不計(Ignore)</td></tr>
<tr><td>0.07mm＜W≦ 0.1mm</td><td>L ≦ 5mm</td><td>N≦4</td></tr>
<tr><td colspan="3"></td></tr>
</table></td><td>次缺
(Min)</td></tr>
<tr><td>6</td><td>POL 氣泡(Polarizer Bubble)</td><td>
<table>
<tr><th>視區(area)</th><th>判定標準(Judging standard)</th><th>允收數量
(Acceptance(Q'ty))</th></tr>
<tr><td rowspan="3">A 區
(Viewing area)</td><td>D < 0.3 mm</td><td>忽略不計(Ignore)</td></tr>
<tr><td>0.3mm＜D≦0.5mm</td><td>N≦4</td></tr>
<tr><td>Distance≥0.5mm</td><td></td></tr>
<tr><td colspan="3"></td></tr>
</table></td><td>次缺
(Min)</td></tr>
</table>

<table>
<tr><th>項次
(No)</th><th>檢驗項目(Inspection item)</th><th>檢驗標準(Inspection Standard)</th><th>缺陷等級
(Defect Level)</th></tr>
<tr><td>7</td><td>POL 折痕&分層(The folding and peeled offin polarizer)</td><td>偏光片不可有折痕和分層（脫膠）的現象(The folding and peeled offin polarizer are not acceptable).
距離邊緣 0.5mm 不管控(Distance from the edge of 0.5mm regardless of control)</td><td>次缺
(Min)</td></tr>
<tr><td>8</td><td>輝度及均勻性、色度(Brightness and uniformity、Chroma)</td><td>應符合規範或圖紙要求規格(Shall be in accordance with the drawings and specification requirements specifications).</td><td>主缺
(Maj)</td></tr>
<tr><td>9</td><td>MURA</td><td>(5% ND Filter) Gray scale 灰階 50%</td><td></td></tr>
<tr><td>10</td><td>電性測試（Electrlcal Testing）</td><td>1.顯示缺畫(Missing line character and icon).
2.無功能與無顯示(No function or no display).
3.顯示故障(Display malfunction).
4.LCD 視角缺陷(LCD viewing angle defect).
5.消耗電流超出規格(Current consumption exceeds product specifications).</td><td>主缺
(Maj)</td></tr>
<tr><td>11</td><td>亮點(相鄰亮點)、暗點
(Bright dot(Adjacent bright dot)、Dark dot)On-display
Pixel：3 dot in 1 pixel
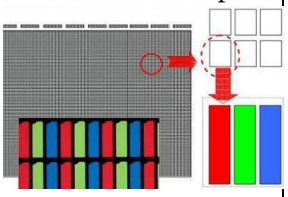
亮點與連續亮點允收總數量及尺寸請參閱亮點判定標準
Please refer to the bright dot judgment standard for the total number and size of bright dot and adjacent bright dots allowed.</td><td>
<table>
<tr><th>尺寸
(Size)</th><th>Item</th><th>判定標準(Judging standard)</th><th>允收數量
(Acceptance(Q'ty))</th></tr>
<tr><td colspan="4"></td></tr>
<tr><td rowspan="5">7.0”</td><td rowspan="2">Bright dot</td><td>D≦1/2 Pixel</td><td>忽略不計(Ignore)</td></tr>
<tr><td>1/2 Pixel＜D≦1 Pixel</td><td>N≦2</td></tr>
<tr><td rowspan="2">Dark dot</td><td>D≦1/2 Pixel</td><td>忽略不計(Ignore)</td></tr>
<tr><td>1/2 Pixel＜D≦1 Pixel</td><td>N≦3</td></tr>
<tr><td colspan="2">Total</td><td>N≦4</td></tr>
<tr><td colspan="4"></td></tr>
</table>
</td><td>次缺
(Min)</td></tr>
</table>

winstar **LCM Sample Estimate Feedback Sheet**

Module Number： _____ **Page: 1**

1、Panel Specification：

1. Panel Type： □ Pass □ NG ,_____
2. View Direction： □ Pass □ NG ,_____
3. Numbers of Dots： □ Pass □ NG ,_____
4. View Area： □ Pass □ NG ,_____
5. Active Area： □ Pass □ NG ,_____
6. Operating Temperature： □ Pass □ NG ,_____
7. Storage Temperature： □ Pass □ NG ,_____
8. Others：_____

2、Mechanical

1. PCB Size： □ Pass □ NG ,_____
2. Frame Size： □ Pass □ NG ,_____
3. Material of Frame： □ Pass □ NG ,_____
4. Connector Position： □ Pass □ NG ,_____
5. Fix Hole Position： □ Pass □ NG ,_____
6. Backlight Position： □ Pass □ NG ,_____
7. Thickness of PCB： □ Pass □ NG ,_____
8. Height of Frame to PCB： □ Pass □ NG ,_____
9. Height of Module： □ Pass □ NG ,_____
10. Others： □ Pass □ NG ,_____

3、Relative Hole Size：

1. Pitch of Connector： □ Pass □ NG ,_____
2. Hole size of Connector： □ Pass □ NG ,_____
3. Mounting Hole size： □ Pass □ NG ,_____
4. Mounting Hole Type： □ Pass □ NG ,_____
5. Others： □ Pass □ NG ,_____

4、Backlight Specification：

1. B/L Type： □ Pass □ NG ,_____
2. B/L Color： □ Pass □ NG ,_____
3. B/L Driving Voltage (Reference for LED Type)： □ Pass □ NG ,_____
4. B/L Driving Current： □ Pass □ NG ,_____
5. Brightness of B/L： □ Pass □ NG ,_____
6. B/L Solder Method： □ Pass □ NG ,_____
7. Others： □ Pass □ NG ,_____

>> **Go to page 2** <<

5、Electronic Characteristics of Module：

1. Input Voltage： □ Pass □ NG ,_____
2. Supply Current： □ Pass □ NG ,_____
3. Driving Voltage for LCD： □ Pass □ NG ,_____
4. Contrast for LCD： □ Pass □ NG ,_____
5. B/L Driving Method： □ Pass □ NG ,_____
6. Negative Voltage Output： □ Pass □ NG ,_____
7. Interface Function： □ Pass □ NG ,_____
8. LCD Uniformity： □ Pass □ NG ,_____
9. ESD test： □ Pass □ NG ,_____
10. Others： □ Pass □ NG ,_____

6、Summary：

Sales signature：_____
Customer Signature：_____
Date：____/____/____