TFT DISPLAY SPECIFICATION



WINSTAR Display Co.,Ltd.

華凌光電股份有限公司

Winstar Display Co., LTD
華凌光電股份有限公司
WEB: https://www.winstar.com.tw E-mail: sales@winstar.com.tw

SPECIFICATION

CUSTOMER : _____

MODULE NO.: WF70B7TIJGDNT0#

APPROVED BY: **(FOR CUSTOMER USE ONLY)**	**PCB VERSION:** **DATA:**

SALES BY	**APPROVED BY**	**CHECKED BY**	**PREPARED BY**
			葉虹蘭
ISSUED DATE: **2021/12/28**			

TFT Display Inspection Specification: https://www.winstar.com.tw/technology/download.html
Precaution in use of TFT module: https://www.winstar.com.tw/technology/download/declaration.html

MODLE NO：

RECORDS OF REVISION	**DOC. FIRST ISSUE**

VERSION	DATE	REVISED PAGE NO.	**SUMMARY**
0	2021/12/28		First issue

Contents

1.Module Classification Information

2.Summary

3.General Specifications

4.Absolute Maximum Ratings

5.Electrical Characteristics

6.DC Characteristics

7.AC Characteristics

8.Optical Characteristics

9.Interface

10.Block Diagram

11.Reliability

12.Touch Panel Information

13.Contour Drawing

14.Other

1.Module Classification Information

W	F	70	B7	T	I	J	G	D	N	T	0	#
①	②	③	④	⑤	⑥	⑦	⑧	⑨	⑩	⑪	⑫	⑬

①	Brand：WINSTAR DISPLAY CORPORATION		
②	Display Type：F→TFT Type, J→Custom TFT		
③	Display Size：7.0” TFT		
④	Model serials no.		
⑤	Backlight Type：	F→CCFL, White S→LED, High Light White	T→LED, White Z→Nichia LED, White
⑥	LCD Polarize Type/ Temperature range/ Gray Scale Inversion Direction	A→Transmissive, N.T, IPS TFT C→Transmissive, N. T, 6:00 ; F→Transmissive, N.T,12:00 ; I→Transmissive, W. T, 6:00 K→Transflective, W.T,12:00 L→Transmissive, W.T,12:00 N→Transmissive, Super W.T, 6:00	Q→Transmissive, Super W.T, 12:00 R→Transmissive, Super W.T, O-TFT V→Transmissive, Super W.T, VA TFT W→Transmissive, Super W.T, IPS TFT X→Transmissive, W.T, VA TFT Y→Transmissive, W.T, IPS TFT Z→Transmissive, W.T, O-TFT
⑦	A：TFT LCD B：TFT+SCREW HOLES+CONTROL BOARD C：TFT+ SCREW HOLES +A/D BOARD D：TFT+ SCREW HOLES +A/D BOARD+CONTROL BOARD E：TFT+ SCREW HOLES +POWER BOARD		F：TFT+CONTROL BOARD G：TFT+ SCREW HOLES H：TFT+D/V BOARD I：TFT+ SCREW HOLES +D/V BOARD J：TFT+POWER BD
⑧	Resolution:		
⑨	D: Digital L：LVDS M:MIPI		
⑩	Interface:		
⑪	TS:		
⑫	Version: X:Raspberry pi		
⑬	Special Code	#:Fit in with ROHS directive regulations	

A	128160	B	320234	C	320240	D	480234	E	480272	F	640480
G	800480	H	1024600	I	320480	J	240320	K	800600	L	240400
M	1024768	N	128128	P	1280800	Q	480800	R	640320	S	480128
T	800320	U	8001280	**V**	176220	W	1280398	X	1024250	Y	1920720
Z	800200	2	1024324	3	7201280	4	19201200	5	1366768	6	1280320

N	Without control board	A	8Bit	B	16Bit	H	HDMI
I	I2C Interface	R	RS232	S	SPI Interface	U	USB

N	Without TS	T	Resistive touch panel	C	Capacitive touch panel (G-F-F)
G	Capacitive touch panel (G-G)	C1	Capacitive touch panel (G-F-F)+OCA		
C2	Capacitive touch panel (G-F-F)+OCR	G1	Capacitive touch panel (G-G)+OCA		
G2	Capacitive touch panel (G-G)+OCR	B	CTP+GG+USB		

2.Summary

TFT 7.0”is a TN transmissive type color active matrix TFT liquid crystal display that use amorphous silicon TFT as switching devices. This module is a composed of a TFT_LCD module, It is usually designed for industrial application and this module follows RoHs.

3.General Specifications

Item	Dimension	Unit
Size	7.0	inch
Dot Matrix	800 x RGB x 480 (TFT)	dots
Module dimension	165 x 100.0x 13.45	mm
Active area	154.08 x 85.92	mm
Pixel Pitch	0.1926 X 0.179	mm
LCD type	TFT, Normally White, Transmissive	
View Direction	12 o'clock	
Gray Scale Inversion Direction	6 o'clock	
Aspect Ratio	16:9	
TFT Interface	18-bit RGB	
Backlight Type	LED ,Normally White	
Color arrangement	RGB-STRIPE	
Driver IC	Source IC: ST-5623D, Gate IC: ST5091D	
With /Without TP	With RTP	
Surface	Glare	

*Color tone slight changed by temperature and driving voltage.

4.Absolute Maximum Ratings

Item	Symbol	Min	Typ	Max	Unit
Operating Temperature	TOP	-20	—	+70	℃
Storage Temperature	TST	-30	—	+80	℃

Note: Device is subject to be damaged permanently if stresses beyond those absolute maximum ratings listed above

1. Temp. □60℃, 90% RH MAX. Temp.＞60℃, Absolute humidity shall be less than 90% RH at 60℃

5.Electrical Characteristics

5.1. Operating conditions:

Item	Symbol	Min	Typ	Max	Unit	Remark
Supply Voltage For Logic	VCC	3.0	3.3	3.6	V	-
Power Supply For Current	VCC =3.3V	-	12	18	mA	-

Note: Environmental condition: 25±5

5.2. LED driving conditions

Parameter	Symbol	Min.	Typ.	Max.	Unit	Remark
LED current	-	-	180	-	mA	-
LED voltage	VLED+	8.4	9.8	11.0	V	Note 1
LED Life Time	-		50,000	-	Hr	Note 2,3,4

Note 1 : There are 1 Groups LED

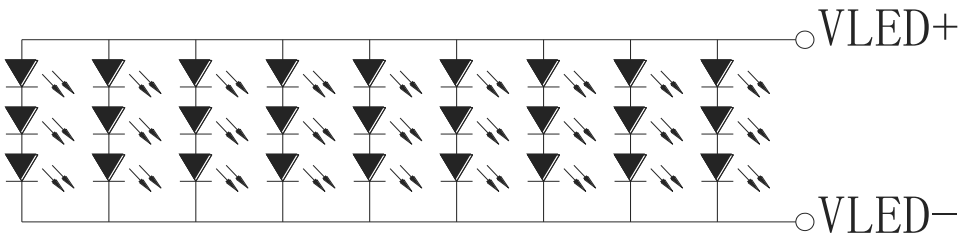

CIRCUIT DIAGRAM

Note 2 : Ta = 25 ℃
Note 3 : Brightness to be decreased to 50% of the initial value
Note 4 : The single LED lamp case

6.DC CHARATERISTICS

Parameter	Symbol	Rating			Unit	Condition
		Min	Typ	Max		
Low level input voltage	V_{IL}	0	-	0.3VCC	V	
High level input voltage	V_{IH}	0.7VCC	-	VCC	V	

7.AC CHARATERISTICS

7.1. Parallel DE mode RGB input timing table

Signal	Symbol	Min	Typ	Max	Unit	Conditions
VDD Power on Slew Rate	TPOR	-	-	20	ms	From 0V to 90% VDD
RSTB pulse width	TRST	10	-	-	us	Clkin=50MHz
CLKIN cycle time	Tcph	20		-	ns	
CLKIN pulse duty	Tcwh	40	50	60	%	
VSD setup time	Tvst	8	-	-	ns	
VSD hold time	Tvhd	8	-	-	ns	
HSD setup time	Thst	8	-	-	ns	
HSD hold time	Thhd	8	-	-	ns	
Data setup time	Tdsu	8	-	-	ns	D[7:0], D1[7:0], D2[7:0] to clkin
Date hold time	Tdhd	8	-	-	ns	D[7:0], D1[7:0], D2[7:0] to clkin
DE setup time	Tesu	8	-	-	ns	
DE hold time	Tehd	8	-	-	ns	
Output stable time	Tsst	-	-	6	us	10% to 90% target voltage. CL=120pF, R=10Kohm
CLKIN Frequency	Fclk	-	40	50	MHz	VDD=3.0V~3.6V
CLKIN Cycle Time	Tclk	20	25	-	ns	
CLKIN Pulse Duty	Tcwh	40	50	60	%	Tclk
Time from HSD to Source Output	Thso	-	20	-	CLKIN	
Time from HSD to LD	Thld	-	20	-	CLKIN	
Time from HSD to STV	Thstv	-	2	-	CLKIN	
Time from HSD to CKV	Thckv	-	20	-	CLKIN	
Time from HSD to OEV	Thoev	-	4	-	CLKIN	
LD pulse width	Twld	-	10	-	CLKIN	
CKV pulse width	Twckv	-	66	-	CLKIN	
OEV pulse width	Twoev	-	74	-	CLKIN	

7.2. Input Clock and Data Timing Diagram

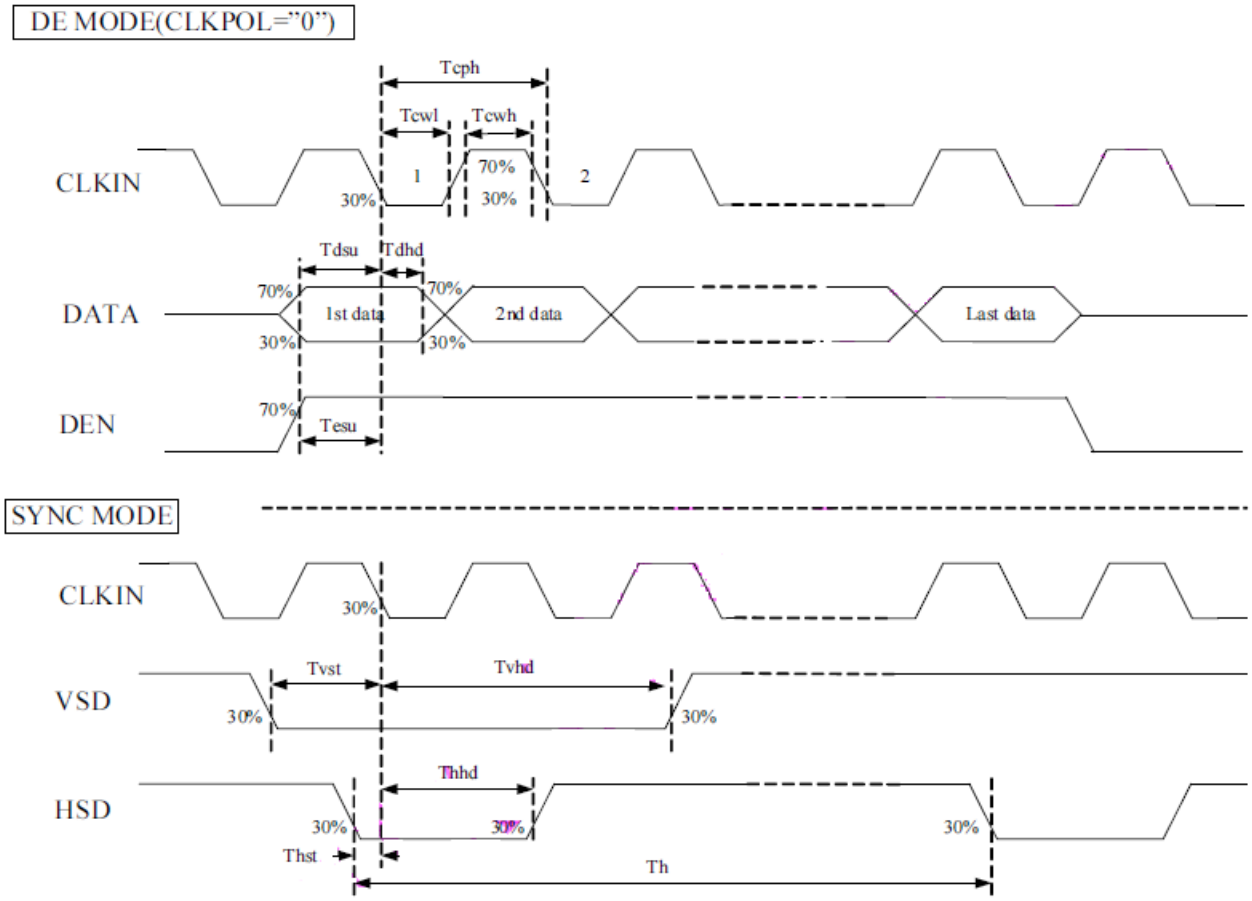

7.3. Timing

Horizontal input timing

Item		Symbol	Values			Unit
Horizontal display area		thd	800			DCLK
DCLK frequency		fclk	**Min.**	**Typ.**	**Max.**	
			-	33.3	50	MHz
1 Horizontal Line		th	862	1056	1200	DCLK
HSD pulse width	Min.	thpw	1			
	Typ.		-			
	Max.		40			
HSD Blanking		thb	46	46	46	
HSD Front Porch		thfp	16	210	354	

Vertical input timing

Item	Symbol	Values			Unit
		Min	Typ.	Max.	
Vertical display area	tvd		480		H
VSD period time	tv	510	525	650	H
VSD pulse width	tvpw	1	-	20	H
VSD Blanking	tvb	23	23	23	H
VSD Front Porch	tvfp	7	22	147	H

7.4. Data Input Format

Vertical input timing

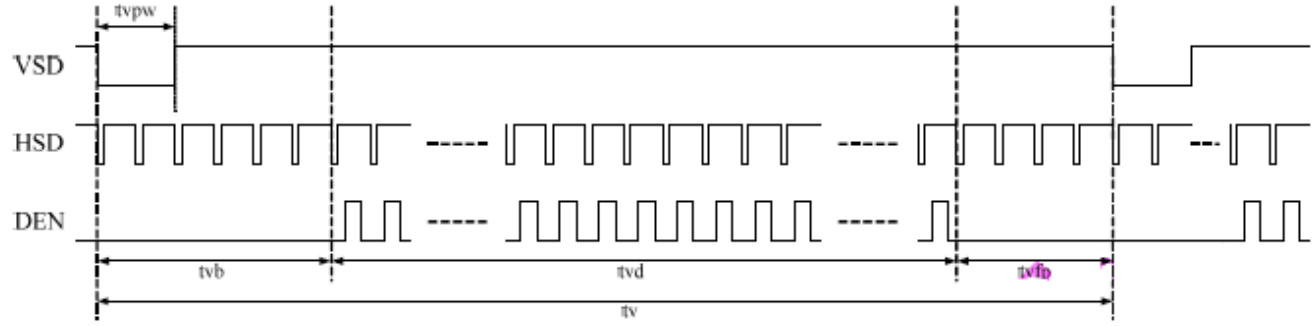

Horizontal input timing

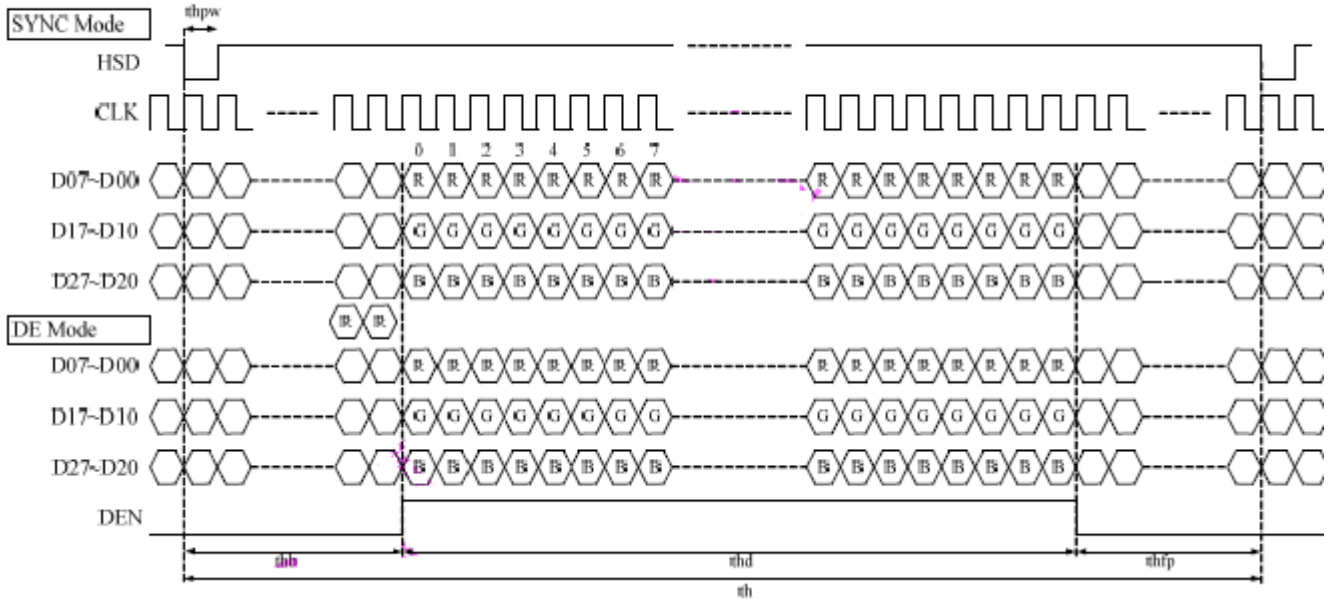

8.Optical Characteristics

Item		Symbol	Condition.	Min	Typ.	Max.	Unit	Remark
Response time		Tr+ Tf	θ=0°、Φ=0°	-	25	50	.ms	Note 3
Contrast ratio		CR	At optimized viewing angle	500	800	-	-	Note 4
Color Chromaticity	White	Wx	θ=0°、Φ=0	0.26	0.31	0.36	-	Note 2,5,6
		Wy		0.28	0.33	0.38	-	
Viewing angle (Gray Scale Inversion Direction)	Hor.	ΘR	CR≧10	60	70	-	Deg.	Note 1
		ΘL		60	70	-		
	Ver.	ΦT		50	60	-		
		ΦB		60	70	-		
Brightness		-	-	200	250	-	cd/m2	Center of display
Uniformity		(U)	-	70	-	-	%	Note 5

Ta=25±2℃, IL=180mA

Note 1: Definition of viewing angle range

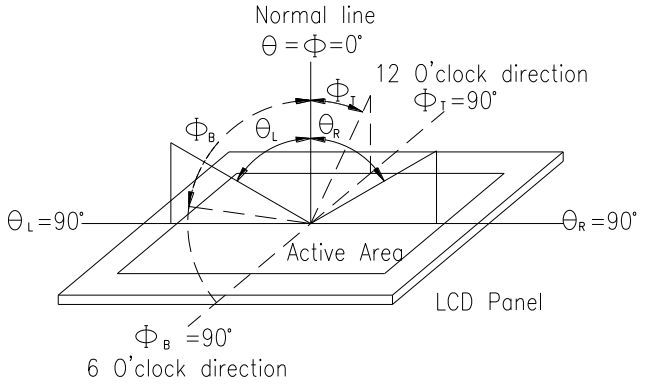

Fig. 8.1. Definition of viewing angle

Note 2: Test equipment setup:

After stabilizing and leaving the panel alone at a driven temperature for 10 minutes, the measurement should be executed. Measurement should be executed in a stable, windless, and dark room. Optical specifications are measured by Topcon BM-7orBM-5 luminance meter 1.0° field of view at a distance of 50cm and normal direction.

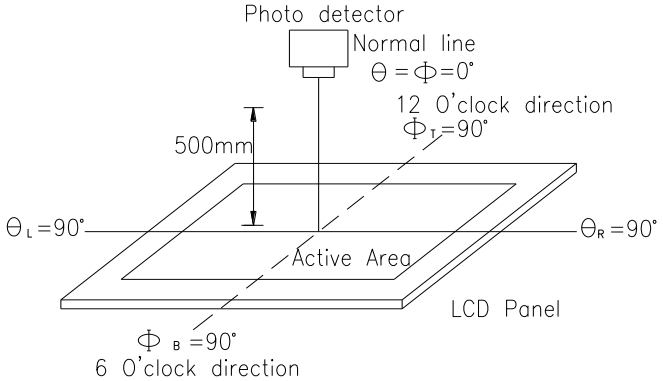

Fig. 8.2. Optical measurement system setup

Note 3: Definition of Response time:

The response time is defined as the LCD optical switching time interval between “White” state and “Black” state. Rise time, Tr, is the time between photo detector output intensity changed from 90%to 10%. And fall time, Tf, is the time between photo detector output intensity changed from 10%to 90%

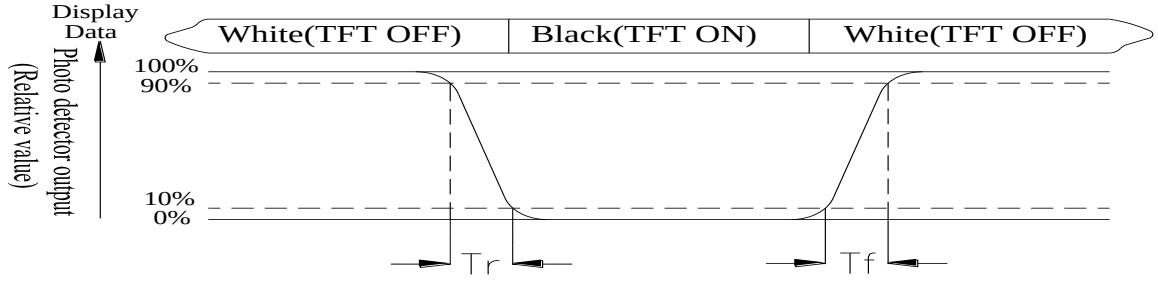

Note 4: Definition of contrast ratio:

The contrast ratio is defined as the following expression.

$$\text{Contrast ratio (CR)} = \frac{\text{Luminance measured when LCD on the "White" state}}{\text{Luminance measured when LCD on the "Black" state}}$$

Note 5: Definition of Luminance Uniformity

Active area is divided into 9 measuring areas (reference the picture in below). Every measuring point is placed at the center of each measuring area.

Luminance Uniformity (U) = Lmin/Lmax x100%

L = Active area length

W = Active area width

Fig8.3. Definition of uniformity

Note 6: Definition of color chromaticity (CIE 1931)

Color coordinates measured at the center point of LCD

Note 7: Measured at the center area of the panel when all the input terminals of LCD panel are electrically opened.

9.Interface

9.1. LCM PIN Definition

Pin	Symbol	Function	Remark
1	GND	Power ground	
2	GND	Power ground	
3	NC	No connection	
4	VCC	Power for Digital Circuit	
5	VCC	Power for Digital Circuit	
6	VCC	Power for Digital Circuit	
7	VCC	Power for Digital Circuit	
8	NC	No connection	
9	DE	Data Input Enable	
10	GND	Power ground	
11	GND	Power ground	
12	GND	Power ground	
13	B5	Blue data	
14	B4	Blue data	
15	B3	Blue data	
16	GND	Power ground	
17	B2	Blue data	
18	B1	Blue data	
19	B0	Blue data(LSB)	
20	GND	Power ground	
21	G5	Green data	
22	G4	Green data	
23	G3	Green data	
24	GND	Power ground	
25	G2	Green data	
26	G1	Green data	
27	G0	Green data(LSB)	
28	GND	Power ground	
29	R5	Red data	
30	R4	Red data	
31	R3	Red data	
32	GND	Power ground	

33	R2	Red data	
34	R1	Red data	
35	R0	Red data(LSB)	
36	GND	Power ground	
37	GND	Power ground	
38	DCLK	Sample clock (CLK)	
39	GND	Power ground	
40	GND	Power ground	

9.2. Backlight Driving Part

Pin No.	Symbol	Description
1	VLED+	Red, LED_ Anode
2	VLED-	White, LED_ Cathode

10.Block Diagram

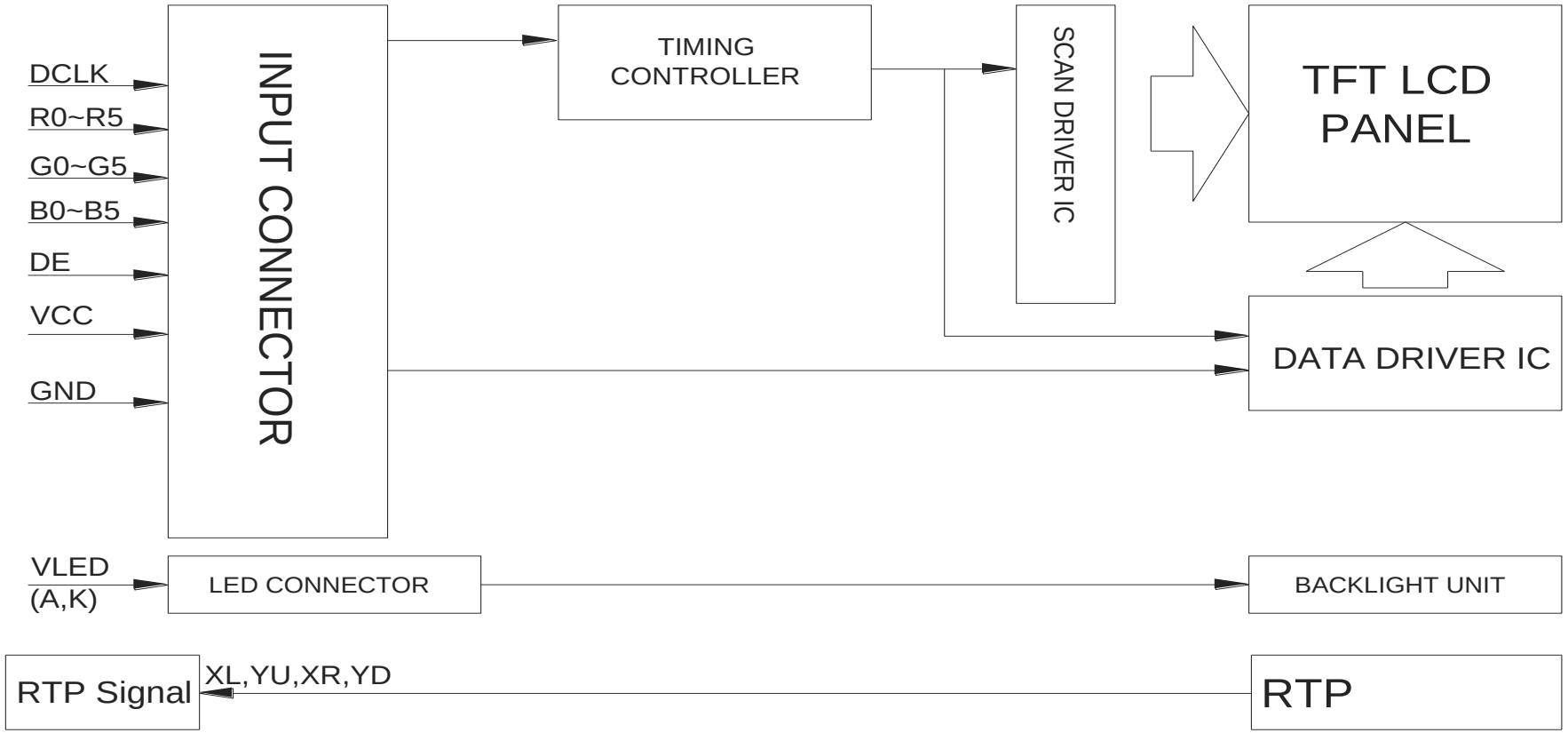

11.Reliability

Content of Reliability Test (Wide temperature, -20℃~70℃)

Environmental Test			
Test Item	**Content of Test**	**Test Condition**	**Note**
High Temperature storage	Endurance test applying the high storage temperature for a long time.	80℃ 200hrs	2
Low Temperature storage	Endurance test applying the low storage temperature for a long time.	-30℃ 200hrs	1,2
High Temperature Operation	Endurance test applying the electric stress (Voltage & Current) and the thermal stress to the element for a long time.	70℃ 200hrs	——
Low Temperature Operation	Endurance test applying the electric stress under low temperature for a long time.	-20℃ 200hrs	1
High Temperature/ Humidity Operation	The module should be allowed to stand at 60℃,90%RH max	60℃,90%RH 96hrs	1,2
Thermal shock resistance	The sample should be allowed stand the following 10 cycles of operation -20℃ 25℃ 70℃ 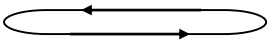 30min 5min 30min 1 cycle	-20℃/70℃ 10 cycles	——
Vibration test	Endurance test applying the vibration during transportation and using.	Total fixed amplitude : 1.5mm Vibration Frequency : 10~55Hz One cycle 60 seconds to 3 directions of X,Y,Z for Each 15 minutes	3
Static electricity test	Endurance test applying the electric stress to the terminal.	VS=±600V(contact), ±800v(air), RS=330Ω CS=150pF 10 times	——

Note1: No dew condensation to be observed.

Note2: The function test shall be conducted after 4 hours storage at the normal Temperature and humidity after remove from the test chamber.

Note3: The packing have to including into the vibration testing.

12.Touch Panel Information

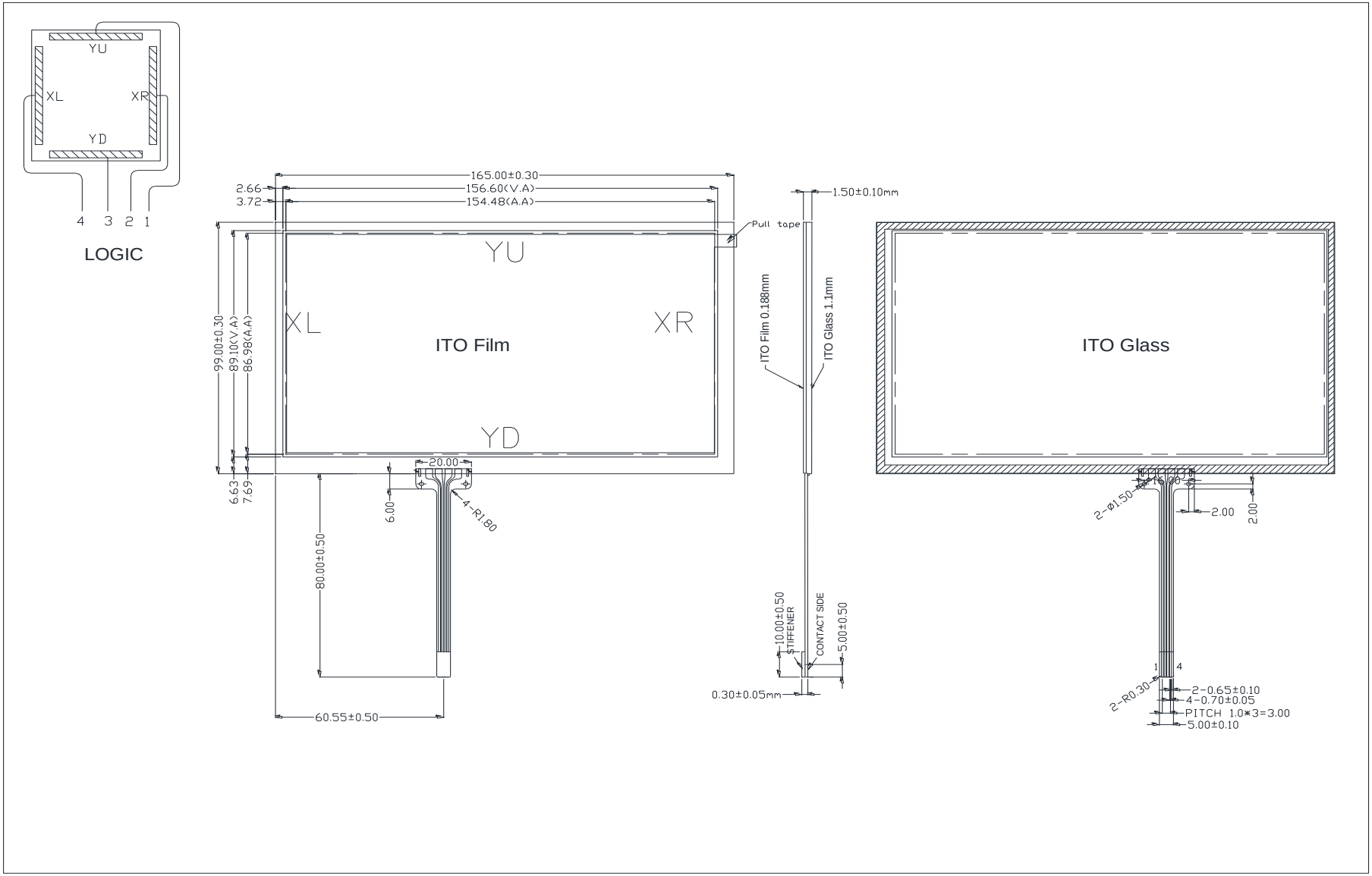

12.1. Resistance Touch Panel General Specifications

Item	Description
Driving condition	DC3~7V
Operating force	30~80g
Linearity max	≤±1.5%
Insulating resistance	＞10MΩ，25V(DC)
Light transparence	70%
Structure type	ITO Film/ITO Glass(F/G)
Surface Hardness	≧3H
Pen Hitting Durability (with the silicon rubber)	＞1000,000 times
X Axis resistance	430~910Ω
Y Axis resistance	150~530Ω

13.Contour Drawing

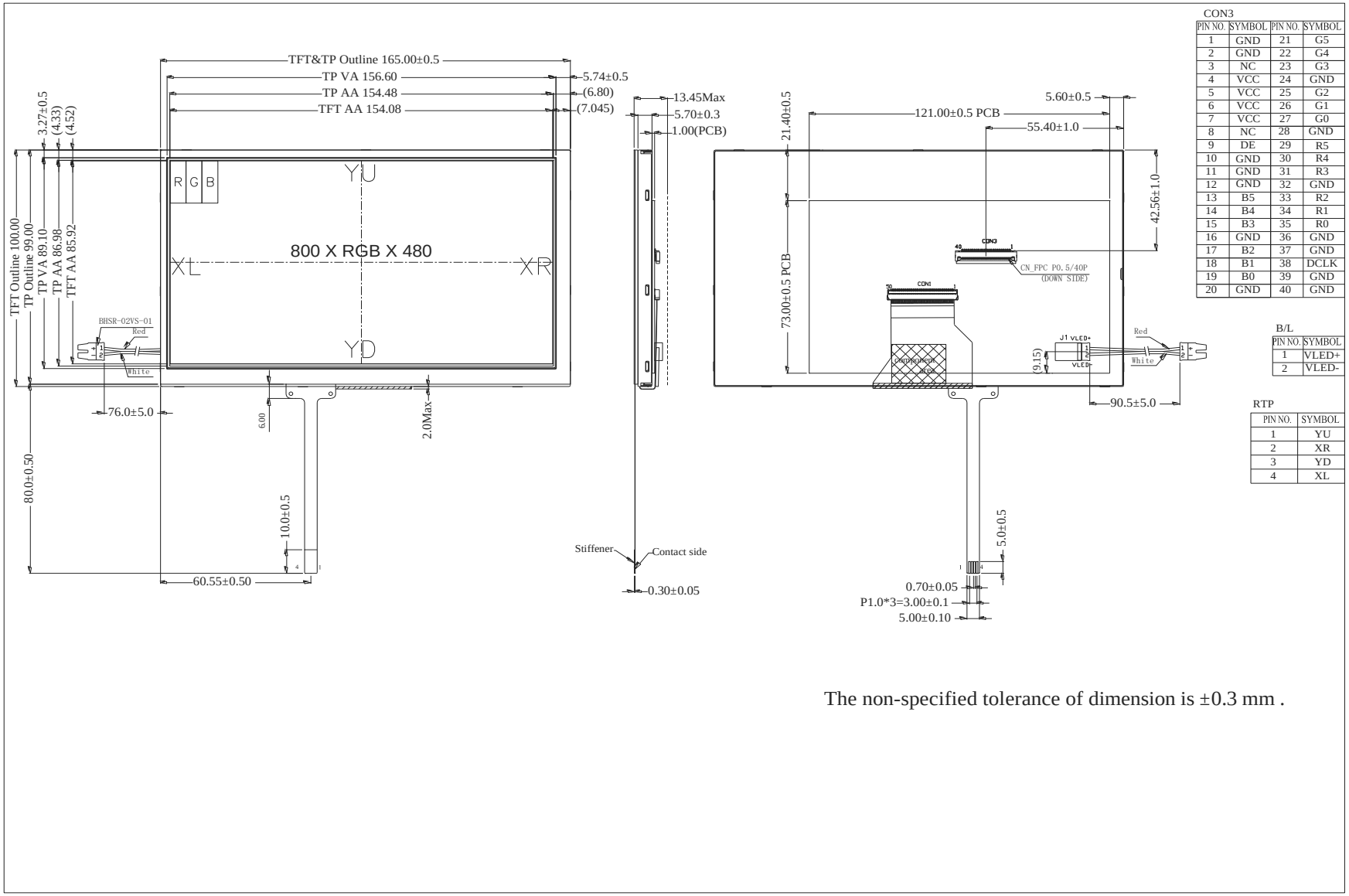

CON3

PIN NO.	SYMBOL	PIN NO.	SYMBOL
1	GND	21	G5
2	GND	22	G4
3	NC	23	G3
4	VCC	24	GND
5	VCC	25	G2
6	VCC	26	G1
7	VCC	27	G0
8	NC	28	GND
9	DE	29	R5
10	GND	30	R4
11	GND	31	R3
12	GND	32	GND
13	B5	33	R2
14	B4	34	R1
15	B3	35	R0
16	GND	36	GND
17	B2	37	GND
18	B1	38	DCLK
19	B0	39	GND
20	GND	40	GND

B/L

PIN NO.	SYMBOL
1	VLED+
2	VLED-

RTP

PIN NO.	SYMBOL
1	YU
2	XR
3	YD
4	XL

The non-specified tolerance of dimension is ±0.3 mm .

winstar

LCM Sample Estimate Feedback Sheet

Module Number： _____ **Page: 1**

1、Panel Specification：

1.	Panel Type：	□ Pass	□ NG , _____
2.	View Direction：	□ Pass	□ NG , _____
3.	Numbers of Dots：	□ Pass	□ NG , _____
4.	View Area：	□ Pass	□ NG , _____
5.	Active Area：	□ Pass	□ NG , _____
6.	Operating Temperature：	□ Pass	□ NG , _____
7.	Storage Temperature：	□ Pass	□ NG , _____
8.	Others： _____		

2、Mechanical

1.	PCB Size：	□ Pass	□ NG , _____
2.	Frame Size：	□ Pass	□ NG , _____
3.	Material of Frame：	□ Pass	□ NG , _____
4.	Connector Position：	□ Pass	□ NG , _____
5.	Fix Hole Position：	□ Pass	□ NG , _____
6.	Backlight Position：	□ Pass	□ NG , _____
7.	Thickness of PCB：	□ Pass	□ NG , _____
8.	Height of Frame to PCB：	□ Pass	□ NG , _____
9.	Height of Module：	□ Pass	□ NG , _____
10.	Others：	□ Pass	□ NG , _____

3、Relative Hole Size：

1.	Pitch of Connector：	□ Pass	□ NG , _____
2.	Hole size of Connector：	□ Pass	□ NG , _____
3.	Mounting Hole size：	□ Pass	□ NG , _____
4.	Mounting Hole Type：	□ Pass	□ NG , _____
5.	Others：	□ Pass	□ NG , _____

4、Backlight Specification：

1.	B/L Type：	□ Pass	□ NG , _____
2.	B/L Color：	□ Pass	□ NG , _____
3.	B/L Driving Voltage (Reference for LED Type)：	□ Pass	□ NG , _____
4.	B/L Driving Current：	□ Pass	□ NG , _____
5.	Brightness of B/L：	□ Pass	□ NG , _____
6.	B/L Solder Method：	□ Pass	□ NG , _____
7.	Others：	□ Pass	□ NG , _____

>> **Go to page 2** <<

5、Electronic Characteristics of Module：

1. Input Voltage： □ Pass □ NG ,_____
2. Supply Current： □ Pass □ NG ,_____
3. Driving Voltage for LCD： □ Pass □ NG ,_____
4. Contrast for LCD： □ Pass □ NG ,_____
5. B/L Driving Method： □ Pass □ NG ,_____
6. Negative Voltage Output： □ Pass □ NG ,_____
7. Interface Function： □ Pass □ NG ,_____
8. LCD Uniformity： □ Pass □ NG ,_____
9. ESD test： □ Pass □ NG ,_____
10. Others： □ Pass □ NG ,_____

6、Summary：

Sales signature：_____

Customer Signature：_____ **Date：** / /