TFT DISPLAY SPECIFICATION



WINSTAR Display Co.,Ltd.

華凌光電股份有限公司

Winstar Display Co., LTD
華凌光電股份有限公司
WEB: https://www.winstar.com.tw E-mail: sales@winstar.com.tw

SPECIFICATION

CUSTOMER : _____

MODULE NO.: WF43QTIBEDBGD#

APPROVED BY: **(FOR CUSTOMER USE ONLY)**	**PCB VERSION: DATA:**

SALES BY	APPROVED BY	CHECKED BY	PREPARED BY
			葉虹蘭
ISSUED DATE: 2019/02/13			

TFT Display Inspection Specification: https://www.winstar.com.tw/technology/download.html
Precaution in use of TFT module: https://www.winstar.com.tw/technology/download/declaration.html

MODLE NO：

RECORDS OF REVISION

DOC. FIRST ISSUE

VERSION	DATE	REVISED PAGE NO.	**SUMMARY**
0	2019/02/13		First issue

Contents

1.Module Classification Information

2.Summary

3.General Specification

4.Absolute Maximum Ratings

5.Electrical Characteristics

6.DC Characteristics

7.Interface Timing Characteristics

8.Optical Characteristics

9.Interface

10.Block Diagram

11.Reliability

12.Touch Panel Information

13.Contour Drawing

14.Initial Code For Reference

1.Module Classification Information

W	F	43	Q	T	I	B	E	D	B	G	D	#
①	②	③	④	⑤	⑥	⑦	⑧	⑨	⑩	⑪	⑫	⑬

①	Brand：WINSTAR DISPLAY CORPORATION		
②	Display Type：F→TFT Type, J→Custom TFT		
③	Display Size：4.3” TFT		
④	Model serials no.		
⑤	Backlight Type：	F→CCFL, White S→LED, High Light White	T→LED, White Z→Nichia LED, White
⑥	LCD Polarize Type/ Temperature range/ Gray Scale Inversion Direction	A→Transmissive, N.T, IPS TFT C→Transmissive, N. T, 6:00 ; F→Transmissive, N.T,12:00 ; I→Transmissive, W. T, 6:00 K→Transflective, W.T,12:00 L→Transmissive, W.T,12:00 N→Transmissive, Super W.T, 6:00	Q→Transmissive, Super W.T, 12:00 R→Transmissive, Super W.T, O-TFT V→Transmissive, Super W.T, VA TFT W→Transmissive, Super W.T, IPS TFT X→Transmissive, W.T, VA TFT Y→Transmissive, W.T, IPS TFT Z→Transmissive, W.T, O-TFT
⑦	A：TFT LCD B：TFT+SCREW HOLES+CONTROL BOARD C：TFT+ SCREW HOLES +A/D BOARD D：TFT+ SCREW HOLES +A/D BOARD+CONTROL BOARD E：TFT+ SCREW HOLES +POWER BOARD		F：TFT+CONTROL BOARD G：TFT+ SCREW HOLES H：TFT+D/V BOARD I：TFT+ SCREW HOLES +D/V BOARD J：TFT+POWER BD

⑧ Resolution:

A	128160	B	320234	C	320240	D	480234	E	480272	F	640480
G	800480	H	1024600	I	320480	J	240320	K	800600	L	240400
M	1024768	N	128128	P	1280800	Q	480800	R	640320	S	480128
T	800320	U	8001280	**V**	176220	W	1280398	X	1024250	Y	1920720
Z	800200	2	1024324	3	7201280	4	19201200	5	1366768	6	1280320

⑨ D: Digital L：LVDS M:MIPI

⑩ Interface:

N	Without control board	A	8Bit	B	16Bit	H	HDMI
I	I2C Interface	R	RS232	S	SPI Interface	U	USB

⑪ TS:

N	Without TS	T	Resistive touch panel	C	Capacitive touch panel (G-F-F)
G	Capacitive touch panel (G-G)	C1	Capacitive touch panel (G-F-F)+OCA		
C2	Capacitive touch panel (G-F-F)+OCR	G1	Capacitive touch panel (G-G)+OCA		
G2	Capacitive touch panel (G-G)+OCR	B	CTP+GG+USB		

⑫	Version: X:Raspberry pi	
⑬	Special Code	#:Fit in with ROHS directive regulations

2.Summary

TFT 4.3” is a TN transmissive type color active matrix TFT liquid crystal display that use amorphous silicon TFT as switching devices. This module is a composed of a TFT_LCD module, It is usually designed for industrial application and this module follows RoHs.

3.General Specifications

Item	Dimension	Unit
Size	4.3	inch
Dot Matrix	480 x RGBx272(TFT)	dots
Module dimension	106.7 x 83.98 x 8.6	mm
Active area	95.04 x 53.856	mm
Dot pitch	0.066 x 0.198	mm
LCD type	TFT, Normally White, Transmissive	
View Direction	12 o'clock	
Gray Scale Inversion Direction	6 o'clock	
Aspect Ratio	16:9	
Backlight Type	LED, Normally White	
Controller IC	SSD1963	
TFT Interface	Digital 8080 family MPU 8bit/16bit	
CTP FW Version	3	
CTP IC	FT5426 or equivalent	
CTP Interface	I2C	
With /Without TP	With CTP	
Surface	Glare	

*Color tone slight changed by temperature and driving voltage.

4.Absolute Maximum Ratings

Item	Symbol	Min	Typ	Max	Unit
Operating Temperature	TOP	-20	－	+70	℃
Storage Temperature	TST	-30	－	+80	℃

Note: Device is subject to be damaged permanently if stresses beyond those absolute maximum ratings listed above

1. Temp. ≦60℃, 90% RH MAX. Temp.＞60℃, Absolute humidity shall be less than 90% RH at 60℃

5.Electrical Characteristics

5.1. Operating conditions: (CON3.Pin1=GND, Pin2=VDD)

Item	Symbol	Condition	Min	Typ	Max	Unit	Remark
Supply Voltage For LCM	VDD	—	3.0	3.1	3.3	V	-
Supply Current For LCM	IDD	—	—	210	350	mA	Note1

Note 1 : This value is test for VDD=3.3V , Ta=25℃ only

5.2. Backlight driving conditions (CON3.Pin33,34=VLED-, Pin35,36=VLED+)

Parameter	Symbol	Min.	Typ.	Max.	Unit	Remark
Operation Current For LED Driver	VLED+=3.3V	270	-	405	mA	Note 1,2
Power Consumption	VLED+=3.3V	891	-	1337	mW	Note 1,2
Supply Voltage For LED Driver	VLED+	3.3	-	5	V	Note 1,2
LED Life Time		-	50,000	-	Hr	Note 2,3,4

Note 1 : Base on VLED= 3.3V for the back light driver IC specification
Note 2 : Ta = 25 ℃
Note 3 : Brightness to be decreased to 50% of the initial value
Note 4 : The single LED lamp case

6.DC CHARATERISTICS

Parameter	Symbol	Rating			Unit	Condition
		Min	Typ	Max		
Low level input voltage	V_{IL}	0	-	0.3VDD	V	
High level input voltage	V_{IH}	0.7VDD	-	VDD	V	

7.Interface timing

7.1. 8080 Mode 8bit/16bit

The 8080 mode MCU interface consist of CS#, D/C#, RD#, WR#, Data Bus signals. This interface use WR# to define a write cycle and RD# for read cycle. If the WR# goes low when the CS# signal is low, the data or command will be latched into the system at the rising edge of WR#. Similarly, the read cycle will start when RD# goes low and end at the rising edge of RD#.

7.2. 8080 Mode Write Cycle

Symbol	Parameter	Min	Typ	Max	Unit
fMCLK	System Clock Frequency	1	-	110	MHz
tMCLK	System Clock Period	1/ fMCLK	-	-	ns
tPWCSH	Control Pulse High Width Write Read	13 30	1.5* **t**MCLK 3.5* **t**MCLK	-	ns
tPWCSL	Control Pulse Low Width Write (next write cycle) Write (next read cycle) Read	13 80 80	1.5* **t**MCLK 9* **t**MCLK 9* **t**MCLK	-	ns
tAS	Address Setup Time	1	-	-	ns
tAH	Address Hold Time	2	-	-	ns
tDSW	Write Data Setup Time	4			ns
tDHW	Write Data Hold Time	1	-	-	ns
tPWLW	Write Low Time	12			ns
tDHR	Read Data Hold Time	1	-	-	ns
tACC	Access Time	32			ns
tPWLR	Read Low Time	36	-	-	ns
tR	Rise Time	-		0.5	ns
tF	Fall Time	-	-	0.5	ns
tCS	Chip select setup time	2		-	ns
tCSH	Chip select hold time to read signal	3	-	-	ns

7.3. Parallel 8080-series Interface Timing Diagram(Write Cycle)

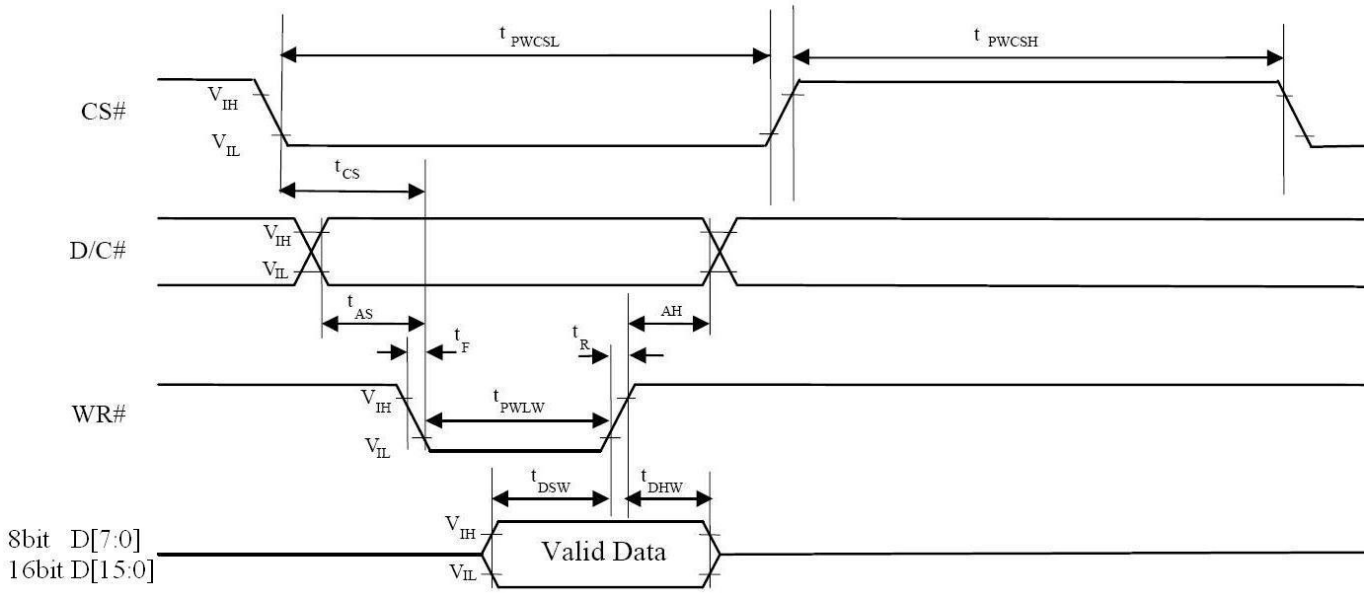

7.4. Parallel 8080-series Interface Timing Diagram(Read Cycle)

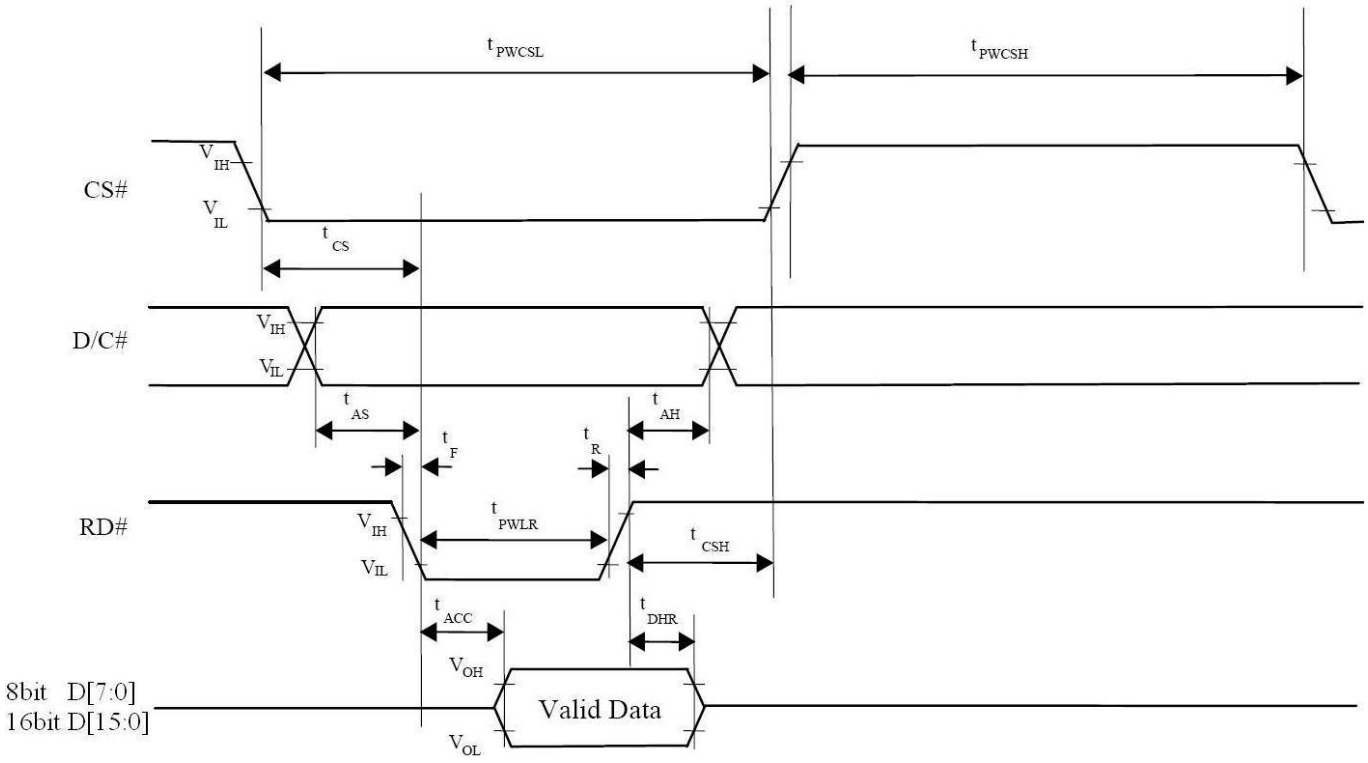

7.5. Pixel Data Format

Interface	Cycle	D[15]	D[14]	D[13]	D[12]	D[11]	D[10]	D[9]	D[8]	D[7]	D[6]	D[5]	D[4]	D[3]	D[2]	D[1]	D[0]
16 bits (565 format)	1st	R5	R4	R3	R2	R1	G5	G4	G3	G2	G1	G0	B5	B4	B3	B2	B1
16 bits	1st	R7	R6	R5	R4	R3	R2	R1	R0	G7	G6	G5	G4	G3	G2	G1	G0
	2nd	B7	B6	B5	B4	B3	B2	B1	B0	R7	R6	R5	R4	R3	R2	R1	R0
	3rd	G7	G6	G5	G4	G3	G2	G1	G0	B7	B6	B5	B4	B3	B2	B1	B0
8 bits	1st									R7	R6	R5	R4	R3	R2	R1	R0
	2nd									G7	G6	G5	G4	G3	G2	G1	G0
	3rd									B7	B6	B5	B4	B3	B2	B1	B0

8.Optical Characteristics

Item		Symbol	Condition.	Min	Typ.	Max.	Unit	Remark
Response time		Tr+ Tf	θ=0°、Φ=0°	-	25	30	.ms	Note 3
Contrast ratio		CR	At optimized viewing angle	300	500	-	-	Note 4
Color Chromaticity	White	Wx	θ=0°、Φ=0	0.26	0.31	0.36		Note 2,6,7
		Wy		0.28	0.33	0.38		
Viewing angle (Gray Scale Inversion Direction)	Hor.	ΘR	CR≧10	-	70	-	Deg.	Note 1
		ΘL		-	70	-		
	Ver.	ΦT		-	50	-		
		ΦB		-	60	-		
Brightness		-	-	300	400	-	cd/m²	Center of display
Uniformity		(U)	-	75	-	-	%	Note5

Ta=25±2℃, VLED /ILED = 3.3V /270mA

Note 1: Definition of viewing angle range

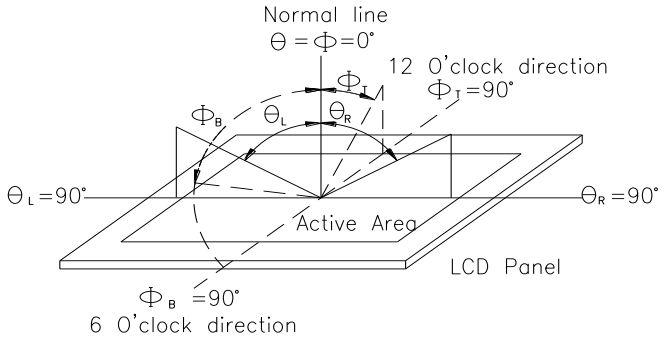

Fig. 8.1. Definition of viewing angle

Note 2: Test equipment setup:

After stabilizing and leaving the panel alone at a driven temperature for 10 minutes, the measurement should be executed. Measurement should be executed in a stable, windless, and dark room. Optical specifications are measured by Topcon BM-7 or BM-5 luminance meter 1.0° field of view at a distance of 50cm and normal direction.

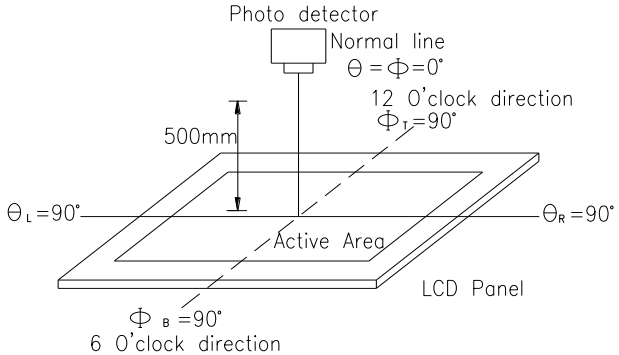

Fig. 8.2. Optical measurement system setup

Note 3: Definition of Response time:

The response time is defined as the LCD optical switching time interval between “White” state and “Black” state. Rise time, Tr, is the time between photo detector output intensity changed from 90%to 10%. And fall time, Tf, is the time between photo detector output intensity changed from 10%to 90%

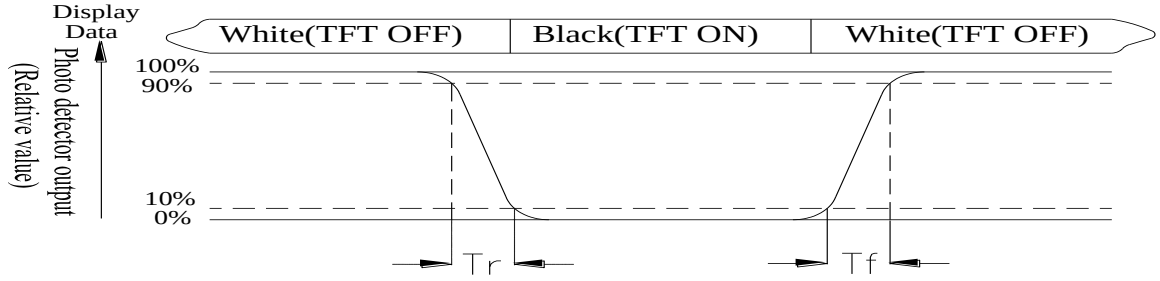

Note 4: Definition of contrast ratio:
The contrast ratio is defined as the following expression.

$$\text{Contrast ratio (CR)} = \frac{\text{Luminance measured when LCD on the "White" state}}{\text{Luminance measured when LCD on the "Black" state}}$$

Note 5: Definition of Luminance Uniformity
Active area is divided into 9 measuring areas (reference the picture in below). Every measuring point is placed at the center of each measuring area.
Luminance Uniformity (U) = Lmin/Lmax x100%
L = Active area length
W = Active area width

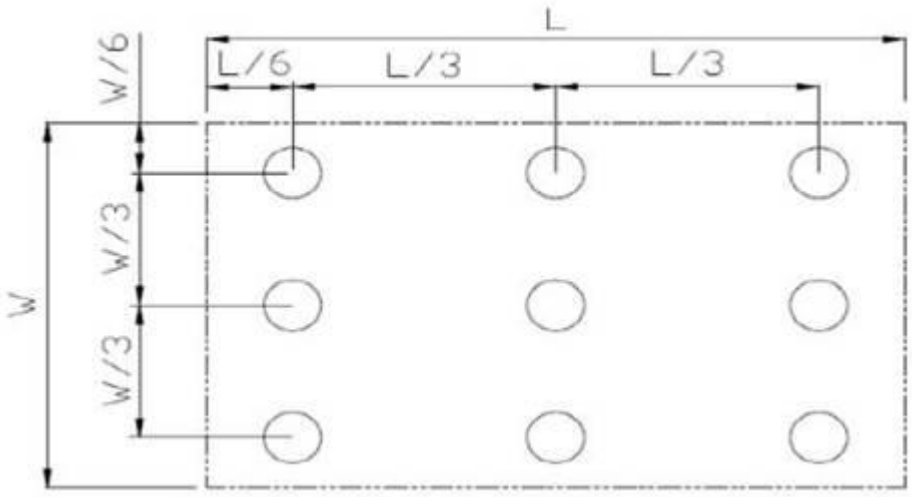

Fig8.3. Definition of uniformity

Note 6: Definition of color chromaticity (CIE 1931)
Color coordinates measured at the center point of LCD

Note 7: Measured at the center area of the panel when all the input terminals of LCD panel are electrically opened.

9.Interface

9.1. LCM PIN Definition (CON3)

Pin	Symbol	Function	Remark
1	GND	System round pin of the IC. Connect to system ground.	
2	VDD	Power Supply : +3.3V	
3	BL_E	Backlight control signal , H: On \ L: Off	
4	D/C	Data/Command select	
5	WR	Write strobe signal	
6	RD	Read strobe signal	
7	DB0	Data bus	
8	DB1	Data bus	
9	DB2	Data bus	
10	DB3	Data bus	
11	DB4	Data bus	
12	DB5	Data bus	
13	DB6	Data bus	
14	DB7	Data bus	
15	DB8	Data bus (When select 8bits mode, this pin is NC)	Note1
16	DB9	Data bus (When select 8bits mode, this pin is NC)	Note1
17	DB10	Data bus (When select 8bits mode, this pin is NC)	Note1
18	DB11	Data bus (When select 8bits mode, this pin is NC)	Note1
19	DB12	Data bus (When select 8bits mode, this pin is NC)	Note1
20	DB13	Data bus (When select 8bits mode, this pin is NC)	Note1
21	DB14	Data bus (When select 8bits mode, this pin is NC)	Note1
22	DB15	Data bus (When select 8bits mode, this pin is NC)	Note1
23	NC	No connection	
24	CTP_INT	External interrupt to the host	
25	CS	Chip select	
26	RESET	Hardware reset	
27	DISP ON	Display control H: On \ L:Off	
28	NC	No connection	
29	CTP_SCL	Active low I2C clock input	
30	CTP_SDA	Data input I2C data input and output	

31	CTP_RST	External Reset, Low is active	
32	NC	No connection	
33	VLED-	VLED- for B/L LED inverter (GND)	
34	VLED-	VLED- for B/L LED inverter (GND)	
35	VLED+	VLED+ for B/L LED inverter (+3.3V)	
36	VLED+	VLED+ for B/L LED inverter (+3.3V)	

Note1: When select 8bit mode, DB0~DB7 be used, DB8~DB15 no connect
When select 16bit mode, DB0~DB15 be used

10.Block Diagram

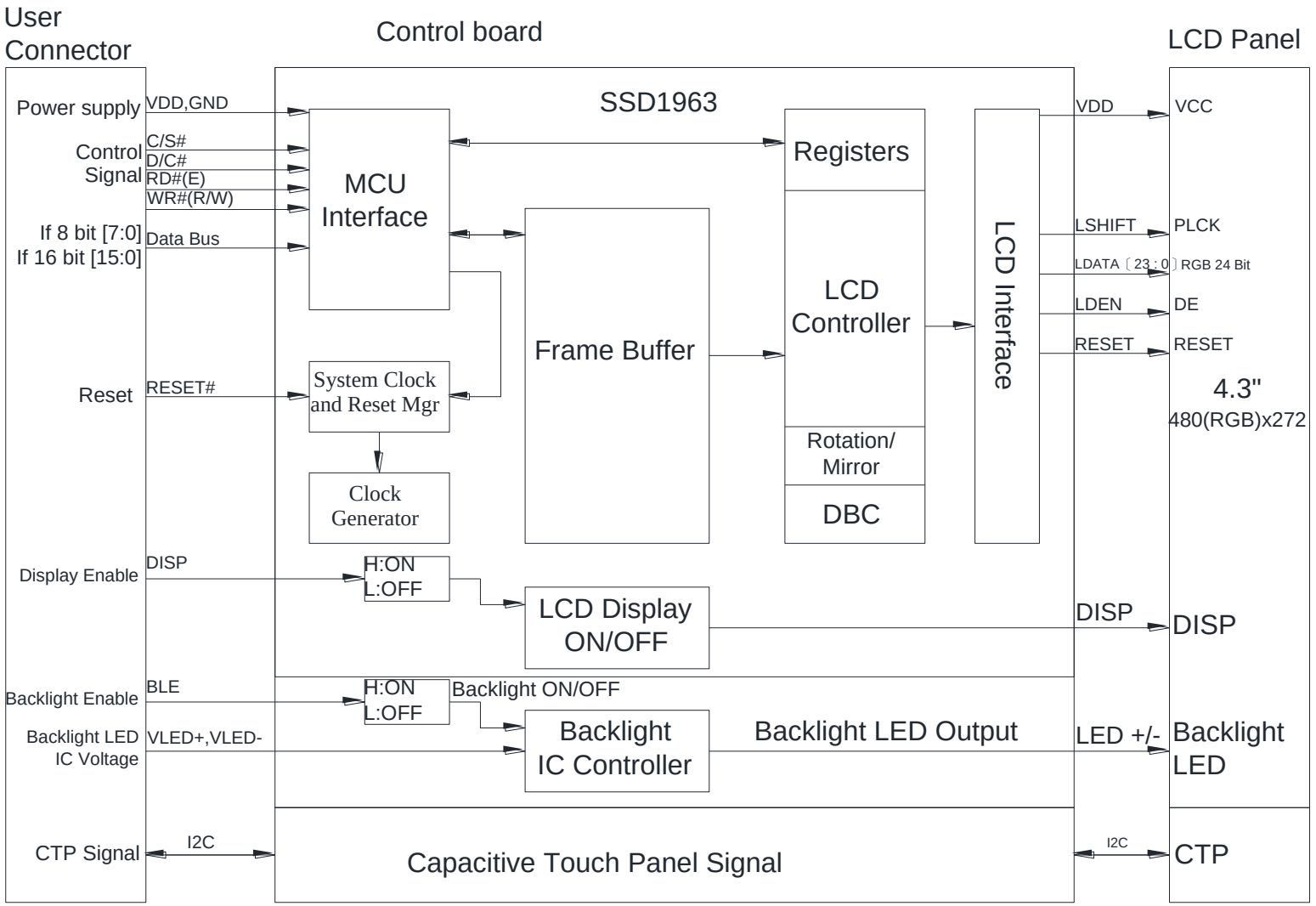

11.Reliability

Content of Reliability Test (Wide temperature, -20℃~70℃)

Environmental Test			
Test Item	**Content of Test**	**Test Condition**	**Note**
High Temperature storage	Endurance test applying the high storage temperature for a long time.	80℃ 200hrs	2
Low Temperature storage	Endurance test applying the low storage temperature for a long time.	-30℃ 200hrs	1,2
High Temperature Operation	Endurance test applying the electric stress (Voltage & Current) and the thermal stress to the element for a long time.	70℃ 200hrs	———
Low Temperature Operation	Endurance test applying the electric stress under low temperature for a long time.	-20℃ 200hrs	1
High Temperature/ Humidity Operation	The module should be allowed to stand at 60℃,90%RH max	60℃,90%RH 96hrs	1,2
Thermal shock resistance	The sample should be allowed stand the following 10 cycles of operation -20℃ 25℃ 70℃ 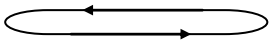 30min 5min 30min 1 cycle	-20℃/70℃ 10 cycles	———
Vibration test	Endurance test applying the vibration during transportation and using.	Total fixed amplitude : 1.5mm Vibration Frequency : 10~55Hz One cycle 60 seconds to 3 directions of X,Y,Z for Each 15 minutes	3
Static electricity test	Endurance test applying the electric stress to the terminal.	VS=±600V(contact), ±800v(air), RS=330Ω CS=150pF 10 times	———

Note1: No dew condensation to be observed.

Note2: The function test shall be conducted after 4 hours storage at the normal Temperature and humidity after remove from the test chamber.

Note3: The packing have to including into the vibration testing.

12.Touch Panel Information

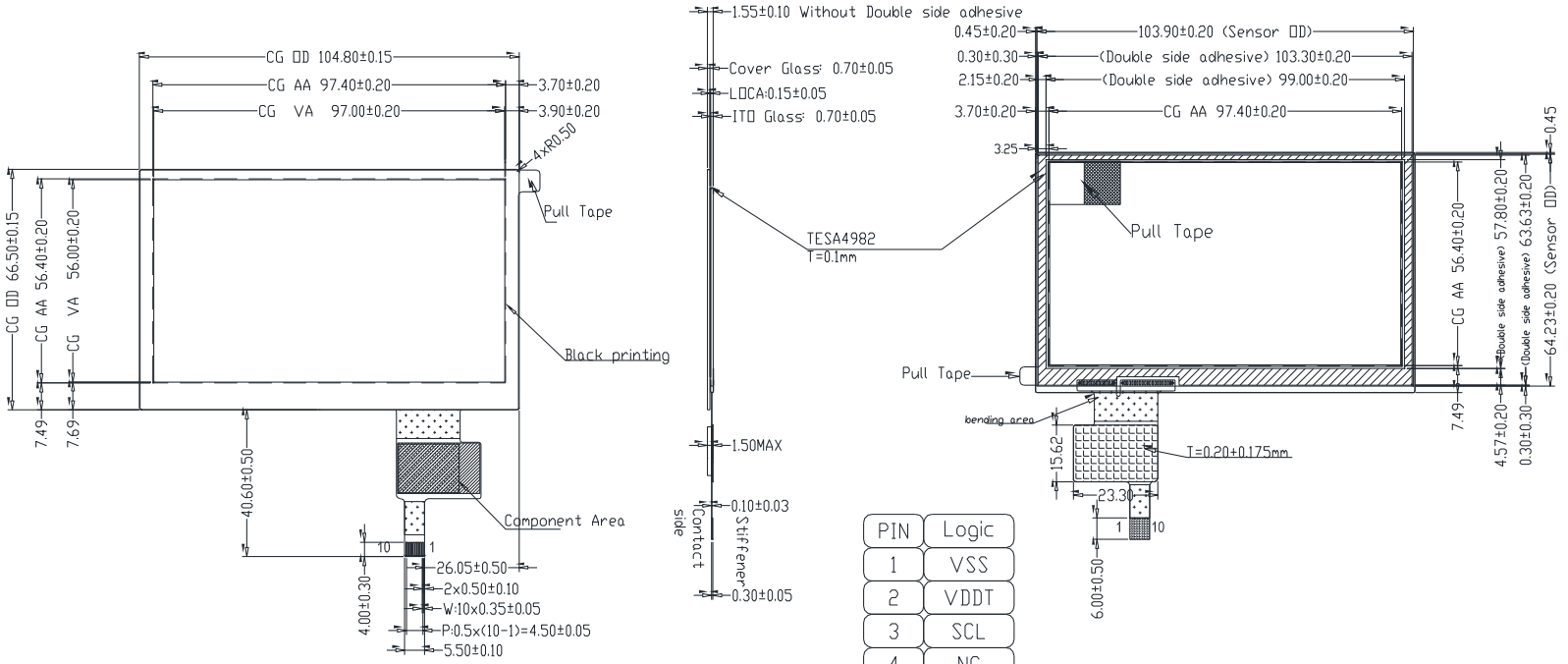

PIN	Logic
1	VSS
2	VDDT
3	SCL
4	NC
5	SDA
6	NC
7	/RST
8	NC
9	/INT
10	VSS

12.1. CTP I2C Timing:

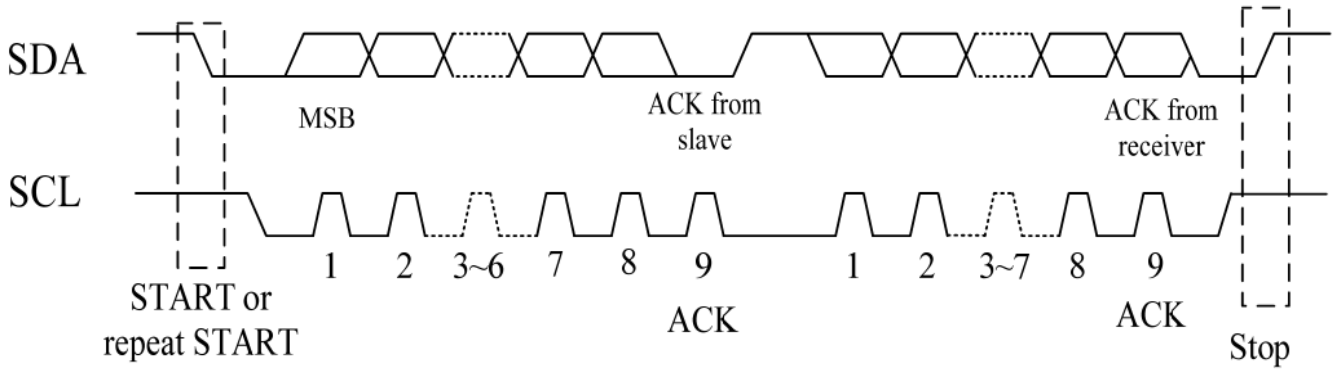

I2C Serial Data Transfer Format

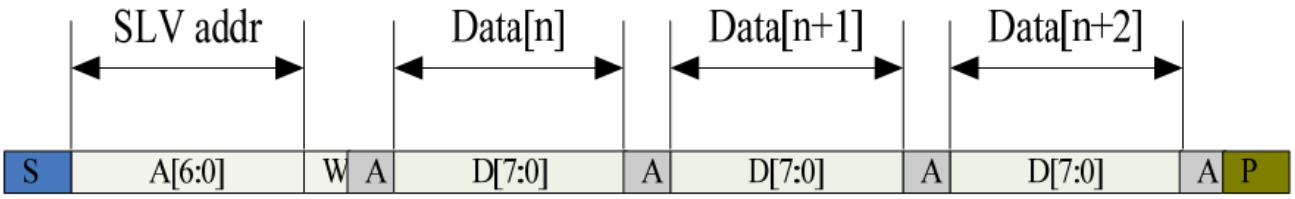

I2C master write, slave read

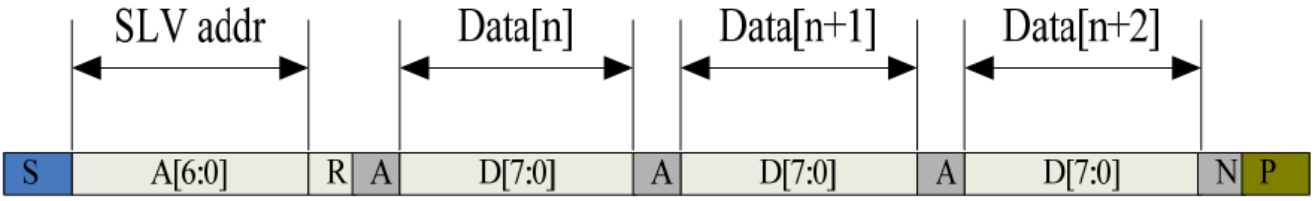

I2C master read, slave write

Mnemonics	Description
S	I2C Start or I2C Restart
A[6:0]	Slave address
R/W	READ/WRITE bit, ‘1' for read, ‘0' for write
A(N)	ACK(NACK) bit
P	STOP: the indication of the end of a packet(if this bit is missing, S will indicate the end of the current packet and beginning of the next packet)

Lists the meanings of the mnemonics used in the above figures

Parameter	Unit	Min	Max
SCL frequency	KHz	0	400
Bus free time between a STOP and START condition	us	1.3	\
Hold time (repeated) ST ART condition	us	0.6	\
Data setup time	ns	100	\
Setup time for a repeated START condition	us	0.6	\
Setup time for STOP condition	us	0.6	\

Interface Timing Characteristics

AS FOR STANDARD CTPM, HOST NEED TO USE BOTH INTERRUPT CONTROL SIGNAL AND SERIAL DATA INTERFACE TO GET THE TOUCH DATA.HERE IS THE TIMING TO GET TOUCH DATA.

12.2. WRITE BYTES TO I2C SLAVE

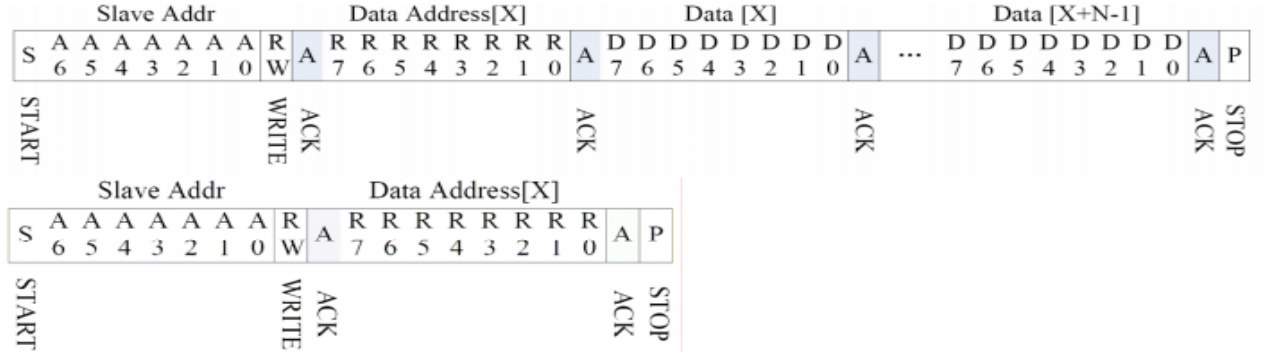

READ X BYTES FROM I2C SLAVE

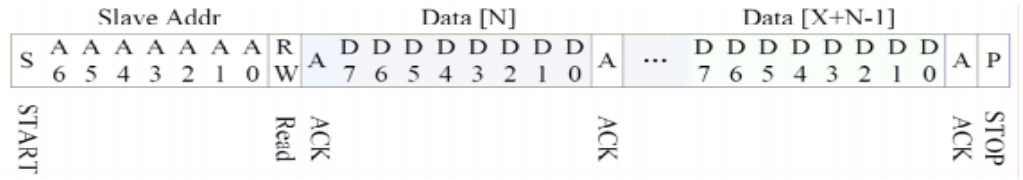

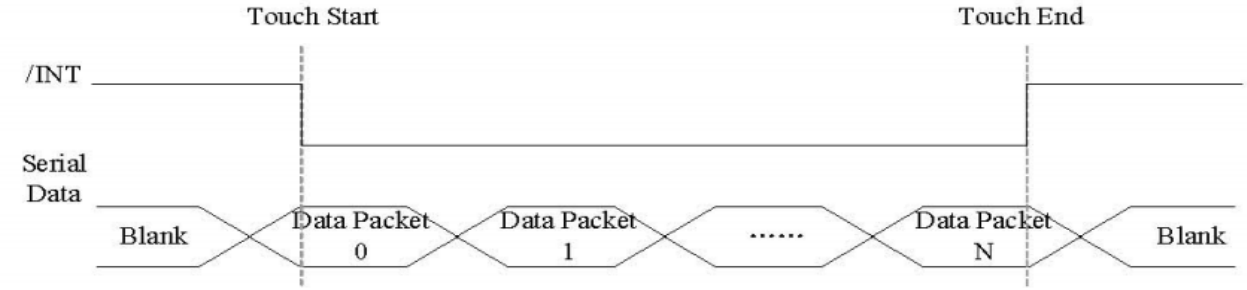

Address: 0x38

12.3. TOUCH DATA READ PROTOCOL

NAME	VALUE	DESCRIPTION
START CH	0X00	START COMMAND FOR CTPM TOUCH DATA PACKET,HOST MUST SEND CTPM A START CH COMMAND BEFORE READ TOUCH DATA
Lst READ BYTE～ LAST READ BYTE		TOUCH DATA PACKET SENT BY CTPM,EACH BYTE HAS 8-BIT DATA ,A TOUCH DATA PACKET CONSISTS OF N BYTE

Address	Name	Bit7	Bit6	Bit5	Bit4	Bit3	Bit2	Bit1	Bit0	Host Access
00h	Devide__Mode		Device Model[2:0]							RW
01h										R
02h	TD__Status					Number of touch points[3:0]				R
03h	Touch1__XH	1st Event Flag				1st Touch X Position[11:8]				R
04h	Touch1__XL	1st Touch X Position[7:0]								R
05h	Touch1__YH	1st Touch ID[3:0]				1st Touch Y Position[11:8]				R
06h	Touch1__YL	1st Touch Y Position[7:0]								R
07h										R
08h										R
09h	Touch2__XH	2nd Event Flag				2nd Touch X Position[11:8]				R
0Ah	Touch2__XL	2nd Touch X Position[7:0]								R
0Bh	Touch2__YH	2nd Touch ID[3:0]				2ndTouch Y Position[11:8]				R
0Ch	Touch2__YL	2nd Touch Y Position[7:0]								R
0Dh										R
oEh										R
0Fh	Touch3__XH	3rdEvent Flag				3rdTouch X Position[11:8]				R
10h	Touch3__XL	3rd Touch X Position[7:0]								R
11h	Touch3__YH	3rdTouch ID[3:0]				3rdTouch Y Position[11:8]				R
12h	Touch3__YL	3rd Touch Y Position[7:0]								R
13h										R
14h										R
15h	Touch4__XH	4thEvent Flag				4thTouch X Position[11:8]				R

16h	Touch4__XL	4th Touch X Position[7:0]			R
17h	Touch4__YH	4thTouch ID[3:0]		4thTouch Y Position[11:8]	R
18h	Touch4__YL	4th Touch Y Position[7:0]			R
19h					R
1Ah					R
1Bh	Touch5__XH	5thEvent Flag		5thTouch X Position[11:8]	R
1Ch	Touch5__XL	5th Touch X Position[7:0]			R
1Dh	Touch5__YH	5thTouch ID[3:0]		5thTouch Y Position[11:8]	R
1Eh	Touch5__YL	5th Touch Y Position[7:0]			R

13.Contour Drawing

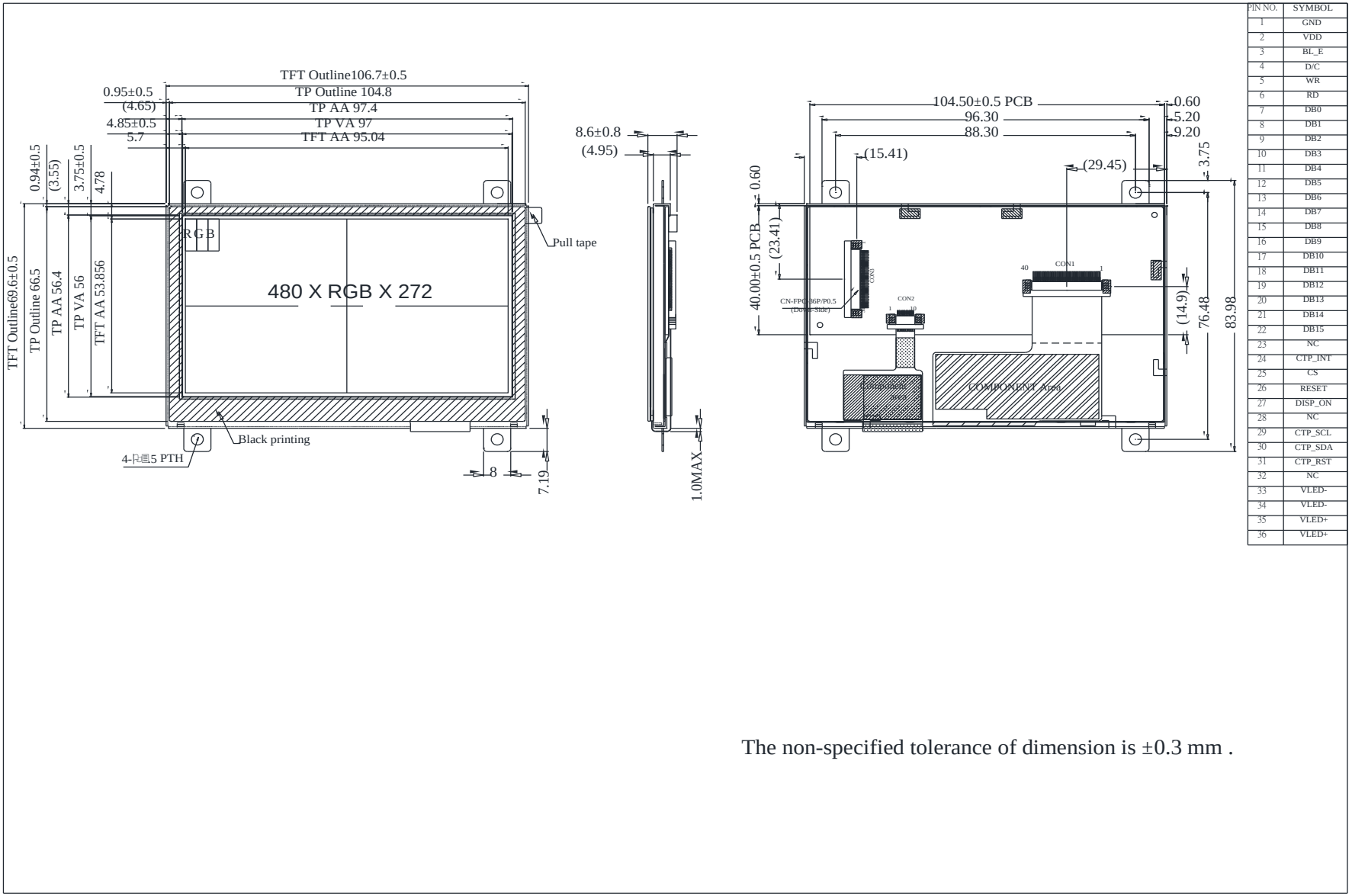

PIN NO.	SYMBOL
1	GND
2	VDD
3	BL_E
4	D/C
5	WR
6	RD
7	DB0
8	DB1
9	DB2
10	DB3
11	DB4
12	DB5
13	DB6
14	DB7
15	DB8
16	DB9
17	DB10
18	DB11
19	DB12
20	DB13
21	DB14
22	DB15
23	NC
24	CTP_INT
25	CS
26	RESET
27	DISP_ON
28	NC
29	CTP_SCL
30	CTP_SDA
31	CTP_RST
32	NC
33	VLED-
34	VLED-
35	VLED+
36	VLED+

The non-specified tolerance of dimension is ±0.3 mm .

14.Initial Code For Reference

```
void Initial_code()
{
        Write_Command(0x01);
        Delay_ms(10);
        Write_Command(0xe0);
        Write_Parameter(0x01);
        Delay_ms(50);
        Write_Command(0xe0);
        Write_Parameter(0x03);
        Delay_ms(5);

        Write_Command(0xb0);
        Write_Parameter(0x20);
        Write_Parameter(0x00);
        Write_Parameter(0x01);
        Write_Parameter(0xdf);
        Write_Parameter(0x01);
        Write_Parameter(0x0f);
        Write_Parameter(0x00);


        Write_Command(0xf0);
        Write_Parameter(0x03); //0x03 is 16bit(565 format);0x00 is for 8-bit,pixel data
format

        //Set the MN of PLL
        Write_Command(0xe2);
        Write_Parameter(0x1d);
        Write_Parameter(0x02);
        Write_Parameter(0x54);

        Write_Command(0xe6);
        Write_Parameter(0x01);
        Write_Parameter(0x99);
        Write_Parameter(0x9a);


        //Set front porch and back porch
        Write_Command(0xb4);
        Write_Parameter(0x02);
        Write_Parameter(0x0d);
        Write_Parameter(0x00);
        Write_Parameter(0x14);
        Write_Parameter(0x05);
        Write_Parameter(0x00);
        Write_Parameter(0x00);
        Write_Parameter(0x00);
```

```
        Write_Command(0xb6);
        Write_Parameter(0x01);
        Write_Parameter(0x24);
        Write_Parameter(0x00);
        Write_Parameter(0x0a);
        Write_Parameter(0x05);
        Write_Parameter(0x00);
        Write_Parameter(0x00);

        Write_Command(0x2a);
        Write_Parameter(0x00);
        Write_Parameter(0x00);
        Write_Parameter(0x01);
        Write_Parameter(0xdf);

        Write_Command(0x2b);
        Write_Parameter(0x00);
        Write_Parameter(0x00);
        Write_Parameter(0x01);
        Write_Parameter(0x0f);

        Write_Command(0x29);
        Write_Command(0x2c);
}
```

1、Panel Specification：

1. Panel Type： □ Pass □ NG ,_____
2. View Direction： □ Pass □ NG ,_____
3. Numbers of Dots： □ Pass □ NG ,_____
4. View Area： □ Pass □ NG ,_____
5. Active Area： □ Pass □ NG ,_____
6. Operating Temperature： □ Pass □ NG ,_____
7. Storage Temperature： □ Pass □ NG ,_____
8. Others：_____

2、Mechanical Specification：

1. PCB Size： □ Pass □ NG ,_____
2. Frame Size： □ Pass □ NG ,_____
3. Material of Frame： □ Pass □ NG ,_____
4. Connector Position： □ Pass □ NG ,_____
5. Fix Hole Position： □ Pass □ NG ,_____
6. Backlight Position： □ Pass □ NG ,_____
7. Thickness of PCB： □ Pass □ NG ,_____
8. Height of Frame to PCB： □ Pass □ NG ,_____
9. Height of Module： □ Pass □ NG ,_____
10. Others： □ Pass □ NG ,_____

3、Relative Hole Size：

1. Pitch of Connector： □ Pass □ NG ,_____
2. Hole size of Connector： □ Pass □ NG ,_____
3. Mounting Hole size： □ Pass □ NG ,_____
4. Mounting Hole Type： □ Pass □ NG ,_____
5. Others： □ Pass □ NG ,_____

4、Backlight Specification：

1. B/L Type： □ Pass □ NG ,_____
2. B/L Color： □ Pass □ NG ,_____
3. B/L Driving Voltage (Reference for LED Type)： □ Pass □ NG ,_____
4. B/L Driving Current： □ Pass □ NG ,_____
5. Brightness of B/L： □ Pass □ NG ,_____
6. B/L Solder Method： □ Pass □ NG ,_____
7. Others： □ Pass □ NG ,_____

>> **Go to page 2** <<

5、Electronic Characteristics of Module：

1.	Input Voltage：	□ Pass	□ NG ,_____
2.	Supply Current：	□ Pass	□ NG ,_____
3.	Driving Voltage for LCD：	□ Pass	□ NG ,_____
4.	Contrast for LCD：	□ Pass	□ NG ,_____
5.	B/L Driving Method：	□ Pass	□ NG ,_____
6.	Negative Voltage Output：	□ Pass	□ NG ,_____
7.	Interface Function：	□ Pass	□ NG ,_____
8.	LCD Uniformity：	□ Pass	□ NG ,_____
9.	ESD test：	□ Pass	□ NG ,_____
10.	Others：	□ Pass	□ NG ,_____

6、Summary：

Sales signature：_____

Customer Signature：_____ **Date**：____/____/____