TFT DISPLAY SPECIFICATION



WINSTAR Display Co.,Ltd.

華凌光電股份有限公司

Winstar Display Co., LTD
華凌光電股份有限公司
WEB: http://www.winstar.com.tw E-mail: sales@winstar.com.tw

SPECIFICATION

CUSTOMER : _____

MODULE NO.: WF101GTYAPLNT0#

APPROVED BY: **(FOR CUSTOMER USE ONLY)**	**PCB VERSION: DATA:**

SALES BY	APPROVED BY	CHECKED BY	PREPARED BY
			葉虹蘭
ISSUED DATE: 2017/12/19			

TFT Display Inspection Specification: http://www.winstar.com.tw/technology/download.html

Winstar Display Co., LTD 華凌光電股份有限公司	MODLE NO：
RECORDS OF REVISION	**DOC. FIRST ISSUE**

VERSION	DATE	REVISED PAGE NO.	**SUMMARY**
0	2017/12/19		First issue

Contents

1.Module Classification Information

2.Summary

3.General Specification

4.Absolute Maximum Ratings

5.Electrical Characteristics

6.Interface Timing Characteristics

7.Optical Characteristics

8.Interface

9.Reliability

10.Touch Panel Information

11.Contour Drawing

12.Other

1.Module Classification Information

W	F	101	G	T	Y	A	P	L	N	T	0	#
①	②	③	④	⑤	⑥	⑦	⑧	⑨	⑩	⑪	⑫	⑬

①	Brand：WINSTAR DISPLAY CORPORATION		
②	Display Type：F→TFT Type, J→Custom TFT		
③	Display Size：10.1” TFT		
④	Model serials no.		
⑤	Backlight Type：	F→CCFL, White S→LED, High Light White	T→LED, White Z→Nichia LED, White
⑥	LCD Polarize Type/ Temperature range/ Gray Scale Inversion Direction	A→Transmissive, N.T, IPS TFT C→Transmissive, N. T, 6:00 ; F→Transmissive, N.T,12:00 ; I→Transmissive, W. T, 6:00 K→Transflective, W.T,12:00 L→Transmissive, W.T,12:00 N→Transmissive, Super W.T, 6:00	Q→Transmissive, Super W.T, 12:00 R→Transmissive, Super W.T, O-TFT V→Transmissive, Super W.T, VA TFT X→Transmissive, W.T, VA TFT Y→Transmissive, W.T, IPS TFT Z→Transmissive, W.T, O-TFT
⑦	A：TFT LCD B：TFT+FR+CONTROL BOARD C：TFT+FR+A/D BOARD D：TFT+FR+A/D BOARD+CONTROL BOARD E：TFT+FR+POWER BOARD		F：TFT+CONTROL BOARD G：TFT+FR H：TFT+D/V BOARD I：TFT+FR+D/V BOARD J：TFT+POWER BD

⑧ Resolution:

A	128160	B	320234	C	320240	D	480234	E	480272	F	640480
G	800480	H	1024600	I	320480	J	240320	K	800600	L	240400
M	1024768	N	128128	P	1280800	Q	480800	R	640320	S	480128
T	800320	U	8001280	**V**	176220	W	1280398	X	1024250	Y	1920720
Z	800200	2	1024324	3	7201280						

⑨	D: Digital L：LVDS M:MIPI
⑩	Interface： N:without control board A:8Bit B:16Bit H: HDMI I:I2C Interface R:RS232 S:SPI Interface U:USB
⑪	TS： N：Without TS T：resistive touch panel C：capacitive touch panel (G-F-F) G：capacitive touch panel(G-G)
⑫	Version
⑬	Special Code #:Fit in with ROHS directive regulations

2.Summary

TFT 10.1” is a IPS transmissive type color active matrix TFT liquid crystal display . In-Plane Switching (IPS) was one of the first refinements to produce significant gains in the light-transmissive characteristics of TFT panels. It is a technology that addresses the two main issues of a standard twisted nematic (TN) TFT display: colour and viewing angle.

3.General Specifications

Item	Dimension	Unit
Screen Diagonal	10.1	inch
Number of Pixels	1280 x 3(RGB) x 800	dots
Module dimension	229.34 x 148.98 x 4.8	mm
Active area	216.96 (H) x 135.6(V)	mm
Pixel pitch	0.1695 × 0.1695	mm
Display Mode	Normally Black	
Pixel Arrangement	R.G.B. Vertical Stripe	
Backlight Type	LED,Normally White	
Aspect Ratio	16:9	
Electrical Interface (Logic)	LVDS	
With /Without TP	With RTP	
Surface	Anti-Glare	

*Color tone slight changed by temperature and driving voltage.

4.Absolute Maximum Ratings

Item	Symbol	Min	Typ	Max	Unit
Operating Temperature	TOP	-20	—	+70	℃
Storage Temperature	TST	-20	—	+70	℃

Note: Device is subject to be damaged permanently if stresses beyond those absolute maximum ratings listed above

1. Temp. ≦60℃, 90% RH MAX. Temp.＞60℃, Absolute humidity shall be less than 90% RH at 60℃

5.Electrical Characteristics

5.1. Typical Operation Conditions

(Note 1)

Item	Symbol	Values			Unit	Remark
		Min.	Typ.	MAX.		
Power voltage	VDD	2.3	2.5	2.7	V	
	AVDD	8.0	8.2	8.4	V	
	VGH	21.7	22	22.3	V	
	VGL	-7.3	-7	-6.7	V	
Input signal voltage	VCOM	2.7	3.0	3.3	V	Note 2

Note 1: Be sure to apply VDD and VGL to the LCD first, and then apply VGH.
Note 2: Typical VCOM is only a reference value, it must be optimized according to each LCM. Be sure to use VR.

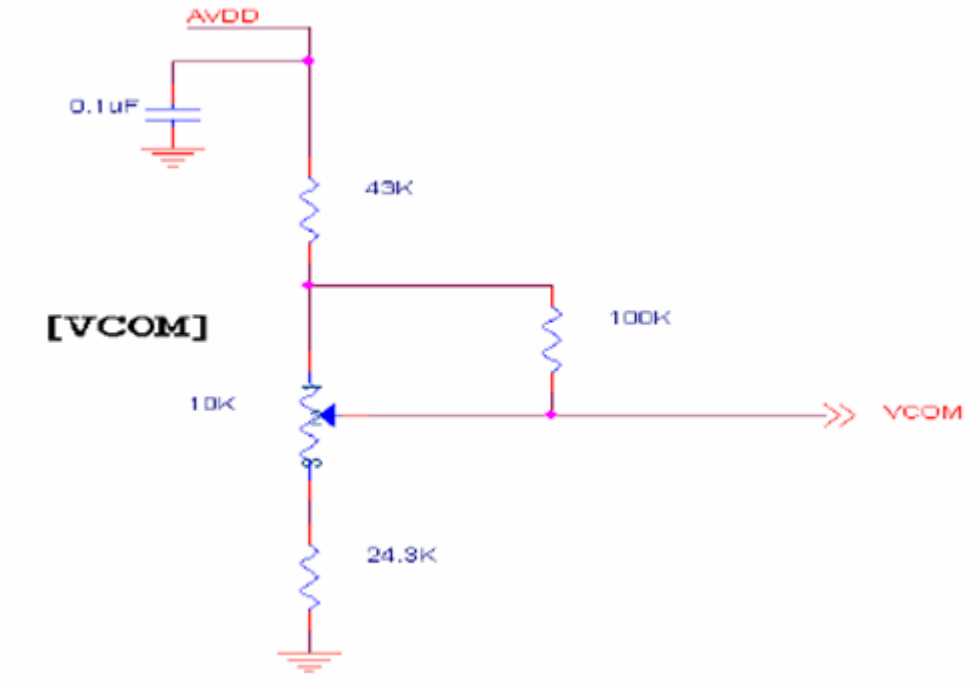

5.2. **Current Consumption**

Item	Symbol	Values			Unit	Remark
		Min.	Typ.	MAX.		
Current for Driver	IGH	-	705	750	uA	VGH =22V
	IGL	-	705	750	uA	VGL = -7V
	IVDD	-	95	120	mA	VDD =2.5V
	IAVDD	-	45	70	mA	AVDD=8.2V

5.3. Power Sequence

a. Power on:

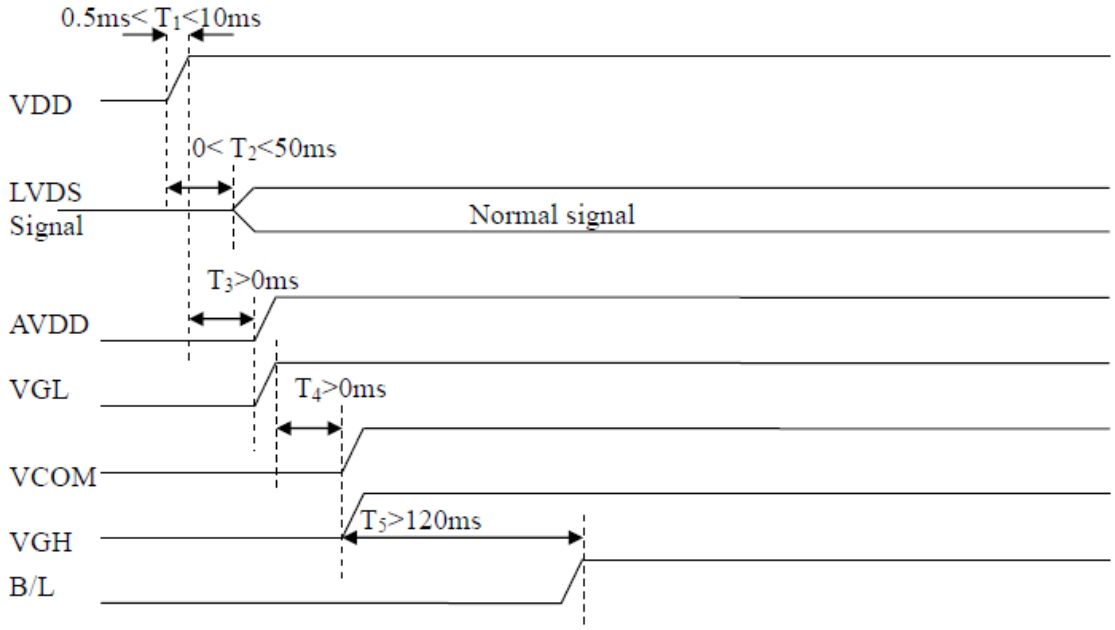

b. Power off:

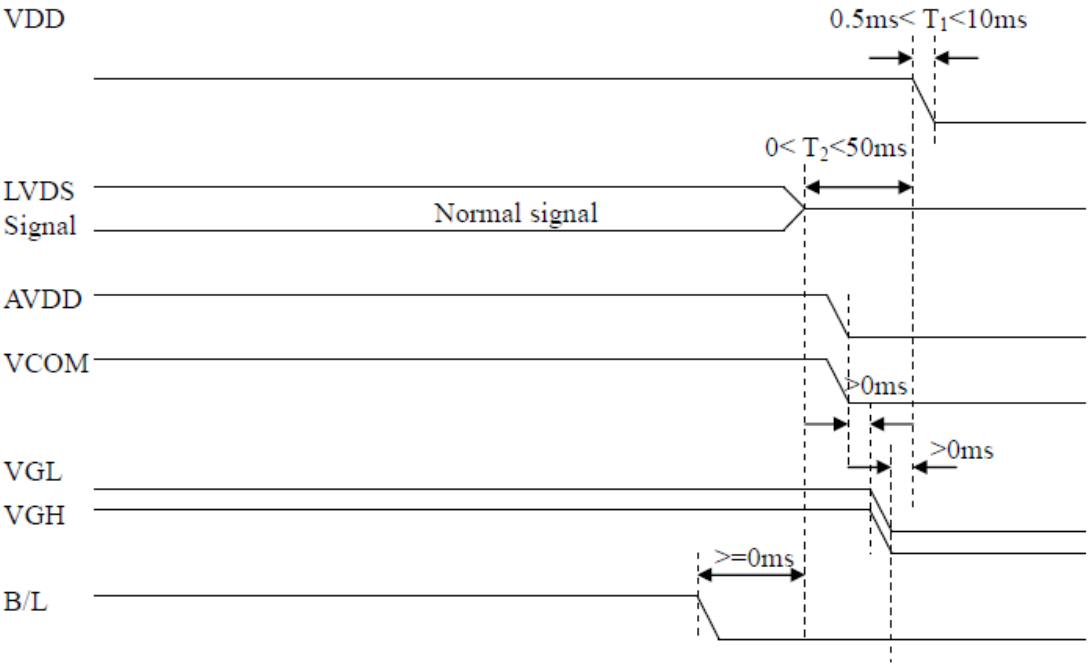

5.4. Backlight Characteristics

Parameter	Symbol	Min.	Typ.	Max.	Unit	Remark
Supply voltage of white LED backlight	VL	8.6	9.6	10.2	V	Note 1
Current for LED backlight	IL	—	220	—	mA	
LED life time	-	50000	-	-	Hr	Note 1

Note 1 : There are 1 Groups LED

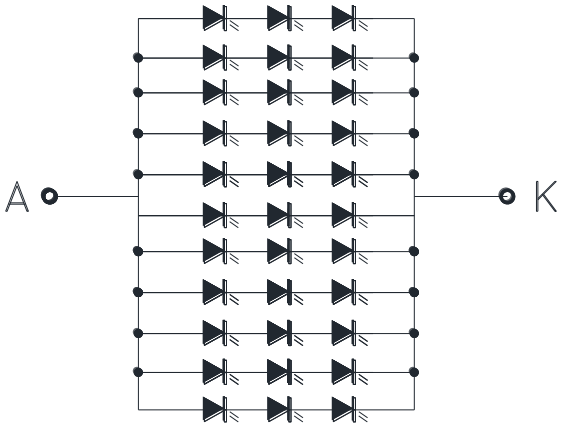

Note 2 : Ta = 25 ℃
Note 3 : Brightness to be decreased to 50% of the initial value
Note 4 : The single LED lamp case

6.LVDS Signal Timing Characteristics

6.1. AC Electrical Characteristics

Parameter	Symbol	Values			Unit	Remark
		Min.	Typ.	MAX.		
LVDS Differential input high Threshold voltage	RxVTH	-	-	+100	mV	RXVCM=1.2 V
LVDS Differential input low Threshold voltage	RxVTL	-100	-	-	mV	
LVDS Differential input common mode voltage	RxVCM	0.7	-	1.6	V	
LVDS Differential voltage	|VID|	200	-	600	mV	

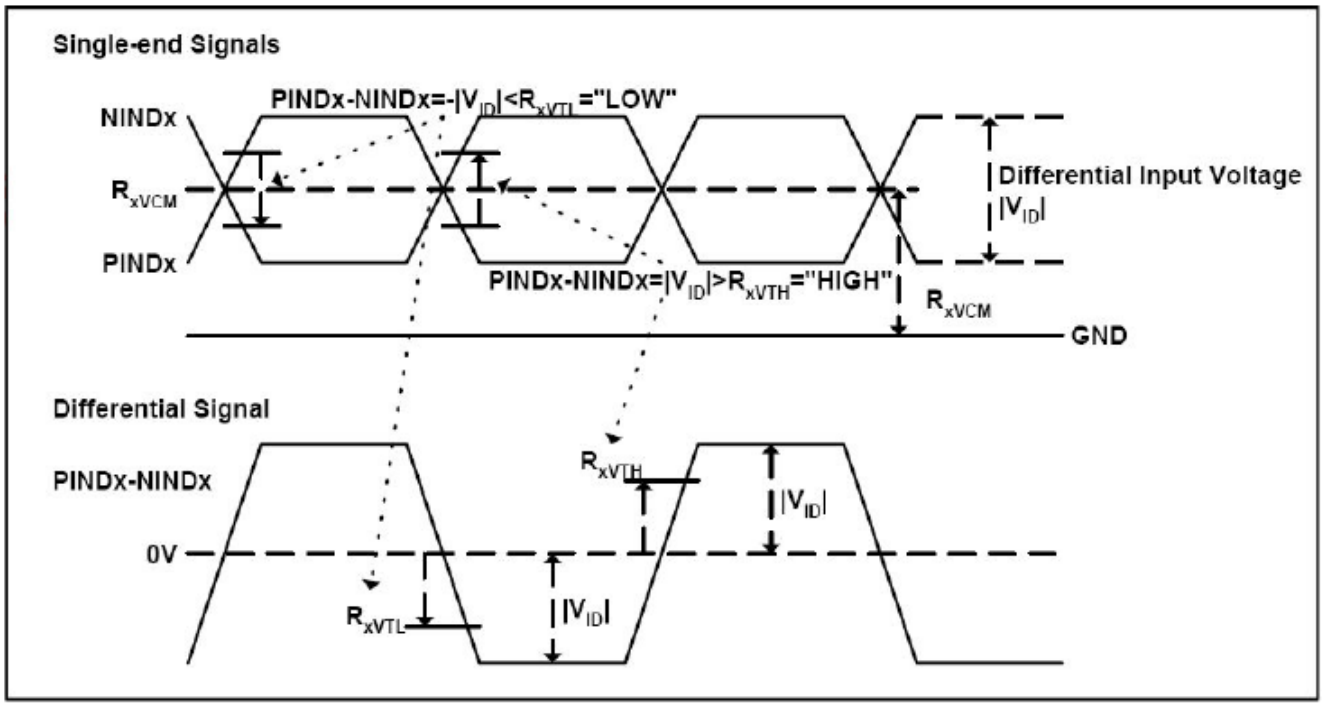

6.2. **Timing Table**

Parameter	Symbol	Value			Unit	Remark
		Min.	Typ.	Max.		
Clock Frequency	1/Tc	68.9	71.1	73.4	Mhz	Frame rate =60Hz
Horizontal display area	thd		1280		Tc	
HS period time	th	1410	1440	1470	Tc	
HS Width +Back Porch +Front Porch	tHW+ tHBP +tHFP	60	160	190	Tc	
Vertical display area	tvd		800		tH	
VS period time	tv	815	823	833	tH	
VS Width +Back Porch +Front Porch	tvW+ tvBP +tvFP	15	23	33	tH	

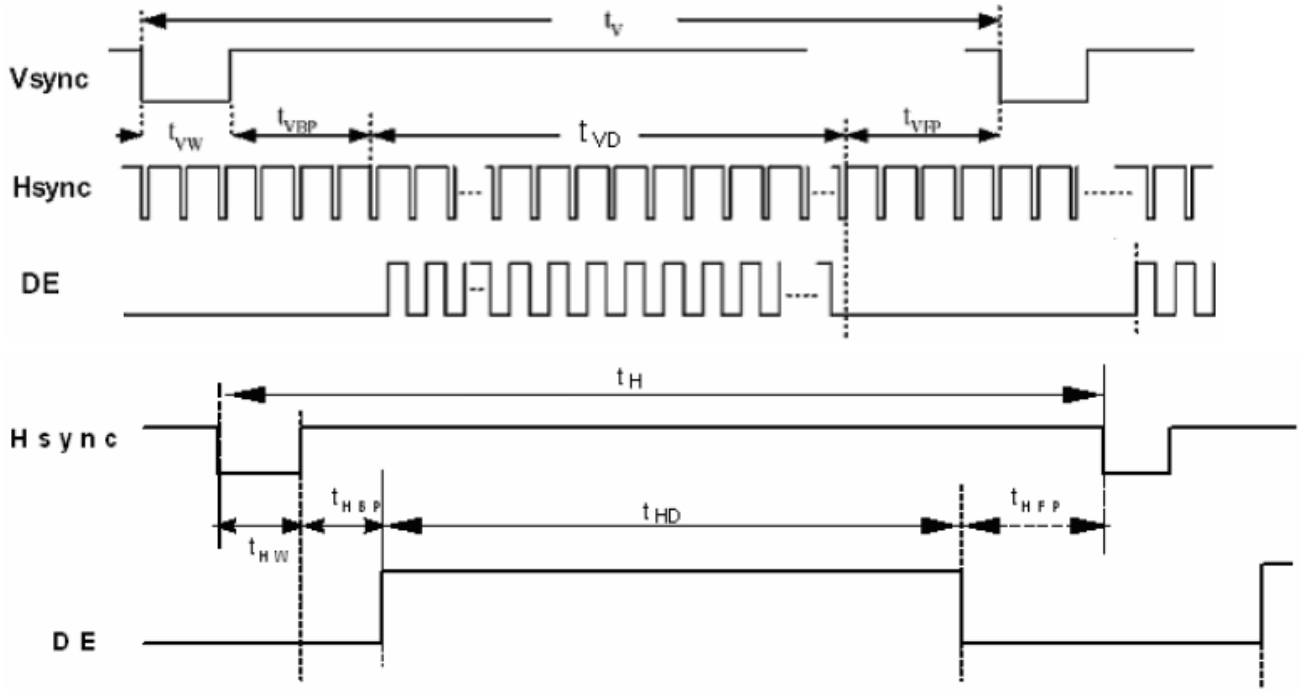

6.3. **LVDS Data Input Format**

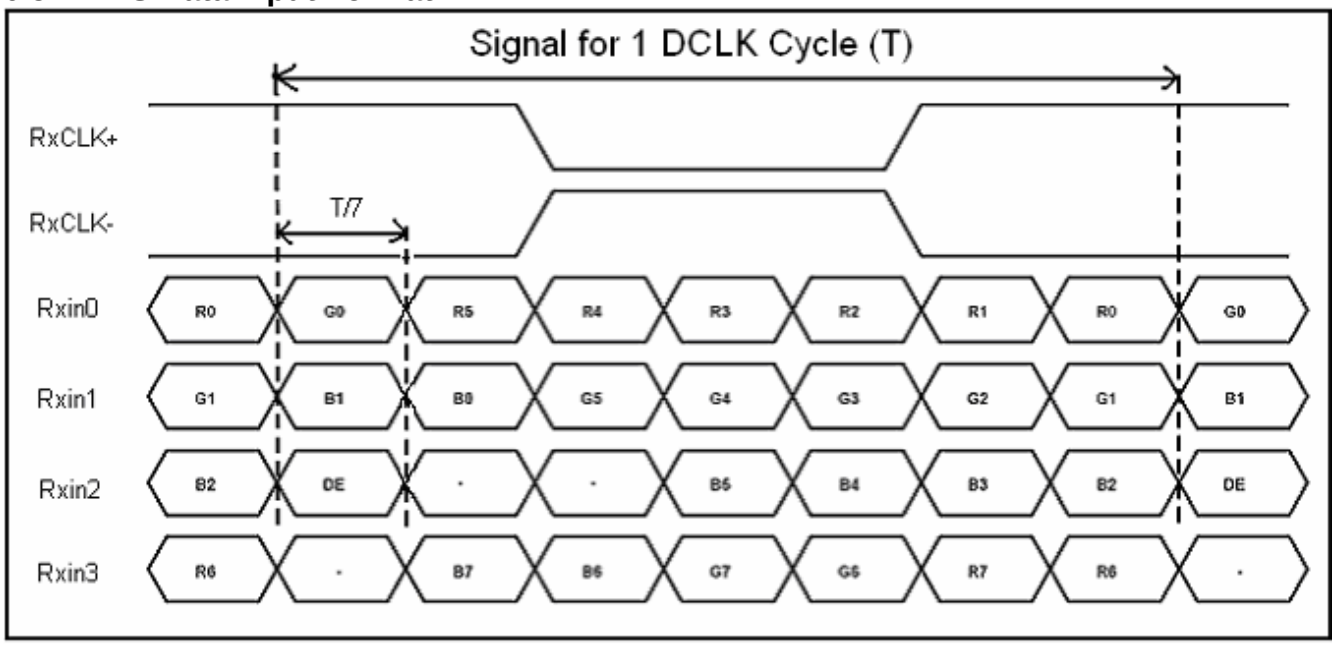

7.Optical Characteristics

Item		Symbol	Condition.	Min	Typ.	Max.	Unit	Remark
Response time		Tr	θ =0° 、Φ=0°	-	10	20	.ms	Note 3
		Tf		-	15	30		
Contrast ratio		CR	At optimized viewing angle	600	800	-	-	Note 4
Color Chromaticity	White	Wx	θ =0° 、Φ=0	0.26	0.31	0.36	-	Note 2,5
		Wy		0.28	0.33	0.38	-	
Viewing angle (Gray Scale Inversion Direction)	Hor.	ΘR	CR≧10	75	85	-	Deg.	Note 1
		ΘL		75	85	-		
	Ver.	ΦT		75	85	-		
		ΦB		75	85	-		
Brightness		-	-	250	-	-	cd/m^2	Center of display

Ta=25±2℃

Note 1: Definition of viewing angle range

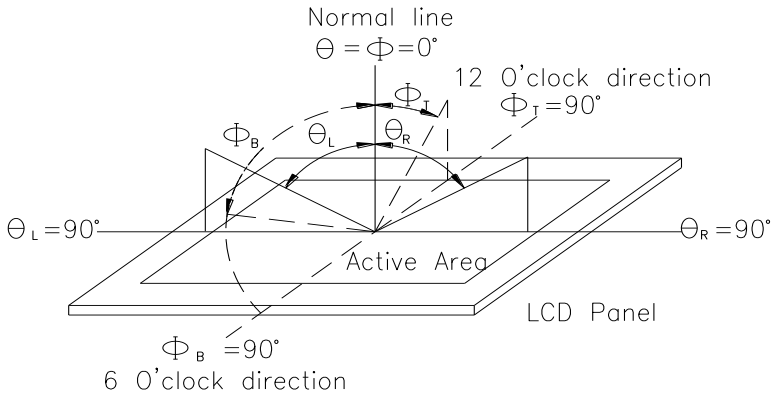

Fig. 7.1. Definition of viewing angle

Note 2: Test equipment setup:

After stabilizing and leaving the panel alone at a driven temperature for 10 minutes, the measurement should be executed. Measurement should be executed in a stable, windless, and dark room. Optical specifications are measured by Topcon BM-7 or BM-5 luminance meter 1.0° field of view at a distance of 50cm and normal direction.

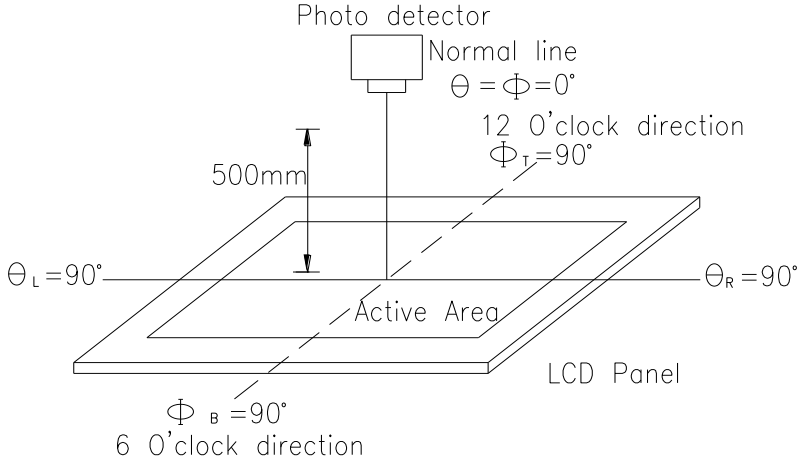

Fig. 7.2. Optical measurement system setup

Note 3: Definition of Response time:

The response time is defined as the LCD optical switching time interval between “White” state and

“Black” state. Rise time, Tr, is the time between photo detector output intensity changed from 90%to 10%. And fall time, Tf, is the time between photo detector output intensity changed from 10%to 90%

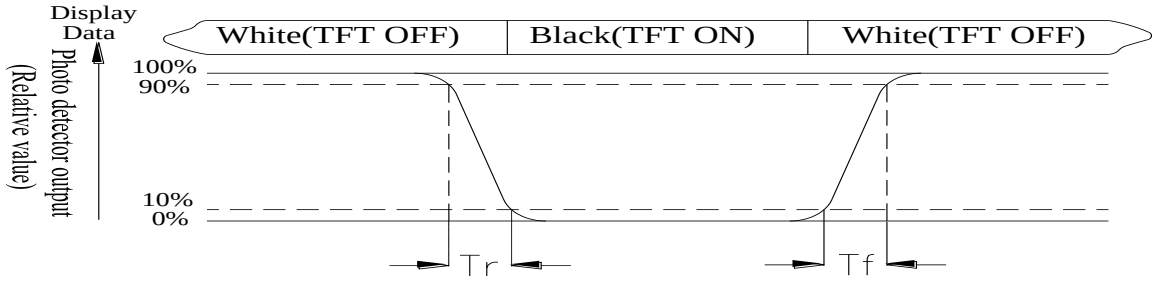

Note 4: Definition of contrast ratio:
The contrast ratio is defined as the following expression.

$$\text{Contrast ratio (CR)} = \frac{\text{Luminance measured when LCD on the "White" state}}{\text{Luminance measured when LCD on the "Black" state}}$$

Note 5: White Vi = V_{i50} ± 1.5V
Black Vi = V_{i50} ± 2.0V
“±” means that the analog input signal swings in phase with VCOM signal.
“±” means that the analog input signal swings out of phase with VCOM signal.
The 100% transmission is defined as the transmission of LCD panel when all the input terminals of module are electrically opened.

Note 6: Definition of color chromaticity (CIE 1931)
Color coordinates measured at the center point of LCD

Note 7: Measured at the center area of the panel when all the input terminals of LCD panel are electrically opened.

8.Interface

Interface Connector

A 40pin connector is used for the module electronics interface. The recommended model is F62240-H1210B manufactured by Vigorconn.

Pin No.	Symbol	I/O	Function	Remark
1	VCOM	P	Common Voltage	
2	VDD	P	Power Supply	
3	VDD	P	Power Supply	
4	NC	-	No connection	
5	NC	-	No connection	
6	NC	-	No connection	
7	GND	P	Ground	
8	Rxin0-	I	-LVDS Differential Data Input	R0-R5,G0
9	Rxin0+	I	+LVDS Differential Data Input	
10	GND	P	Ground	
11	Rxin1-	I	-LVDS Differential Data Input	G1G5,B0,B1
12	Rxin1+	I	+LVDS Differential Data Input	
13	GND	P	Ground	
14	Rxin2-	I	-LVDS Differential Data Input	B2-B5,HS,VS, DE
15	Rxin2+	I	+LVDS Differential Data Input	
16	GND	P	Ground	
17	RxCLK-	I	-LVDS Differential Clock Input	LVDS CLK
18	RxCLK+	I	+LVDS Differential Clock Input	
19	GND	P	Ground	
20	Rxin3-	I	-LVDS Differential Data Input	R6,R7,G6,G7, B6,B7
21	Rxin3+	I	+LVDS Differential Data Input	
22	GND	P	Ground	
23	NC	-	No connection	
24	NC	-	No connection	
25	GND	P	Ground	
26	NC	-	No connection	
27	NC	-	No connection	
28	NC	-	No connection	
29	AVDD	P	Power for Analog Circuit	
30	GND	P	Ground	

31	LED-	P	LED Cathode	
32	LED-	P	LED Cathode	
33	NC	-	No connection	
34	NC	-	No connection	
35	VGL	P	Gate OFF Voltage	
36	NC	-	No connection	
37	NC	-	No connection	
38	VGH	P	Gate ON Voltage	
39	LED+	P	LED Anode	
40	LED+	P	LED Anode	

I: input, O: output, P: Power

9.Reliability

Content of Reliability Test (Wide temperature, -20℃~70℃)

Environmental Test			
Test Item	**Content of Test**	**Test Condition**	**Note**
High Temperature storage	Endurance test applying the high storage temperature for a long time.	70℃ 200hrs	2
Low Temperature storage	Endurance test applying the low storage temperature for a long time.	-20℃ 200hrs	1,2
High Temperature Operation	Endurance test applying the electric stress (Voltage & Current) and the thermal stress to the element for a long time.	70℃ 200hrs	——
Low Temperature Operation	Endurance test applying the electric stress under low temperature for a long time.	-20℃ 200hrs	1
High Temperature/ Humidity Operation	The module should be allowed to stand at 60℃,90%RH max	60℃,90%RH 96hrs	1,2
Thermal shock resistance	The sample should be allowed stand the following 10 cycles of operation -20℃ 25℃ 70℃ 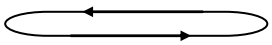 30min 5min 30min 1 cycle	-20℃/70℃ 10 cycles	——
Vibration test	Endurance test applying the vibration during transportation and using.	Total fixed amplitude : 1.5mm Vibration Frequency : 10~55Hz One cycle 60 seconds to 3 directions of X,Y,Z for Each 15 minutes	3
Static electricity test	Endurance test applying the electric stress to the terminal.	VS=±600V(contact), ±800v(air), RS=330Ω CS=150pF 10 times	——

Note1: No dew condensation to be observed.

Note2: The function test shall be conducted after 4 hours storage at the normal Temperature and humidity after remove from the test chamber.

Note3: The packing have to including into the vibration testing.

10.Touch Panel Information

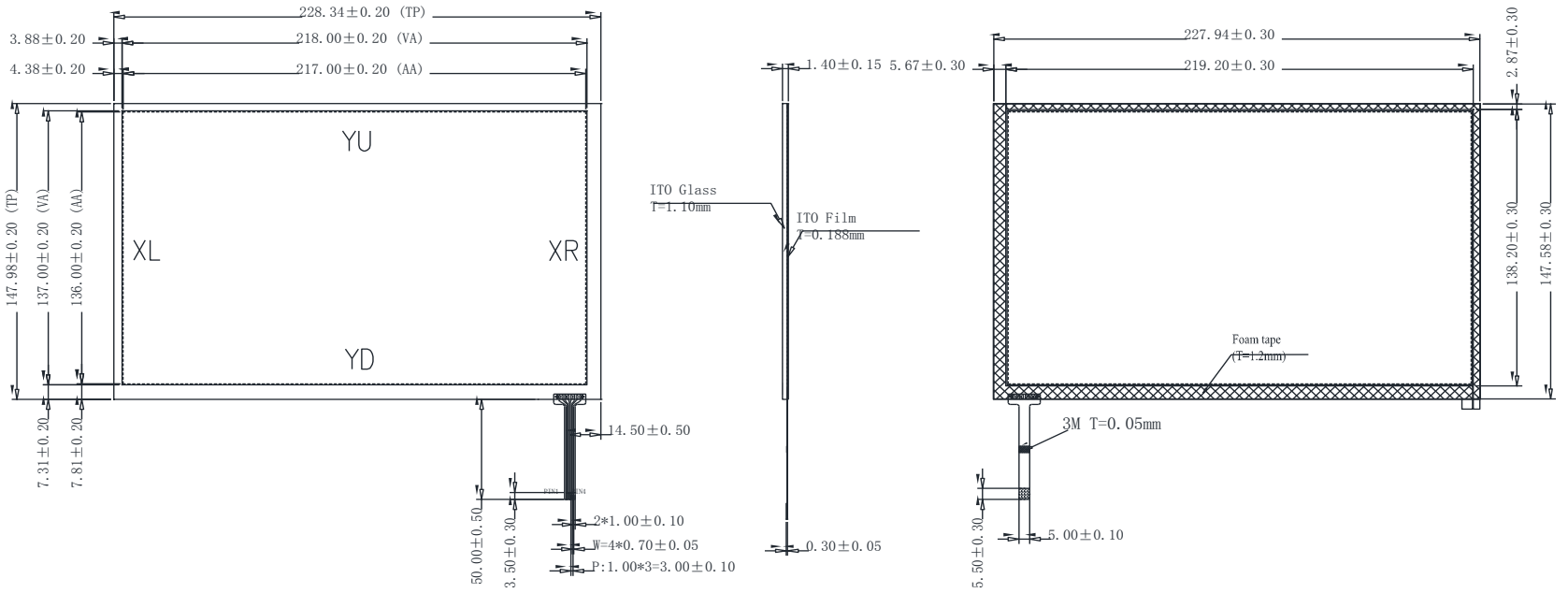

Pin No.	SYMBOL
1	XL
2	YD
3	XR
4	YU

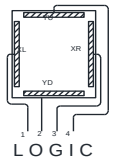

LOGIC

The non-specified tolerance of dimension is ±0.3mm.

10.1. Resistance Touch Panel General Specifications

Item	Description
Driving condition	DC5V
Operating force	20~100g
Linearity max	≤±1.5%
Insulating resistance	＞20MΩ，25V(DC)
Light transparence	70%
Structure type	ITO Film/ITO Glass(F/G)
Surface Hardness	3H typ
Pen Hitting Durability (with the silicon rubber)	＞1000,000 times
X resistance	450~1100Ω
Y resistance	200~600Ω

11.Contour Drawing

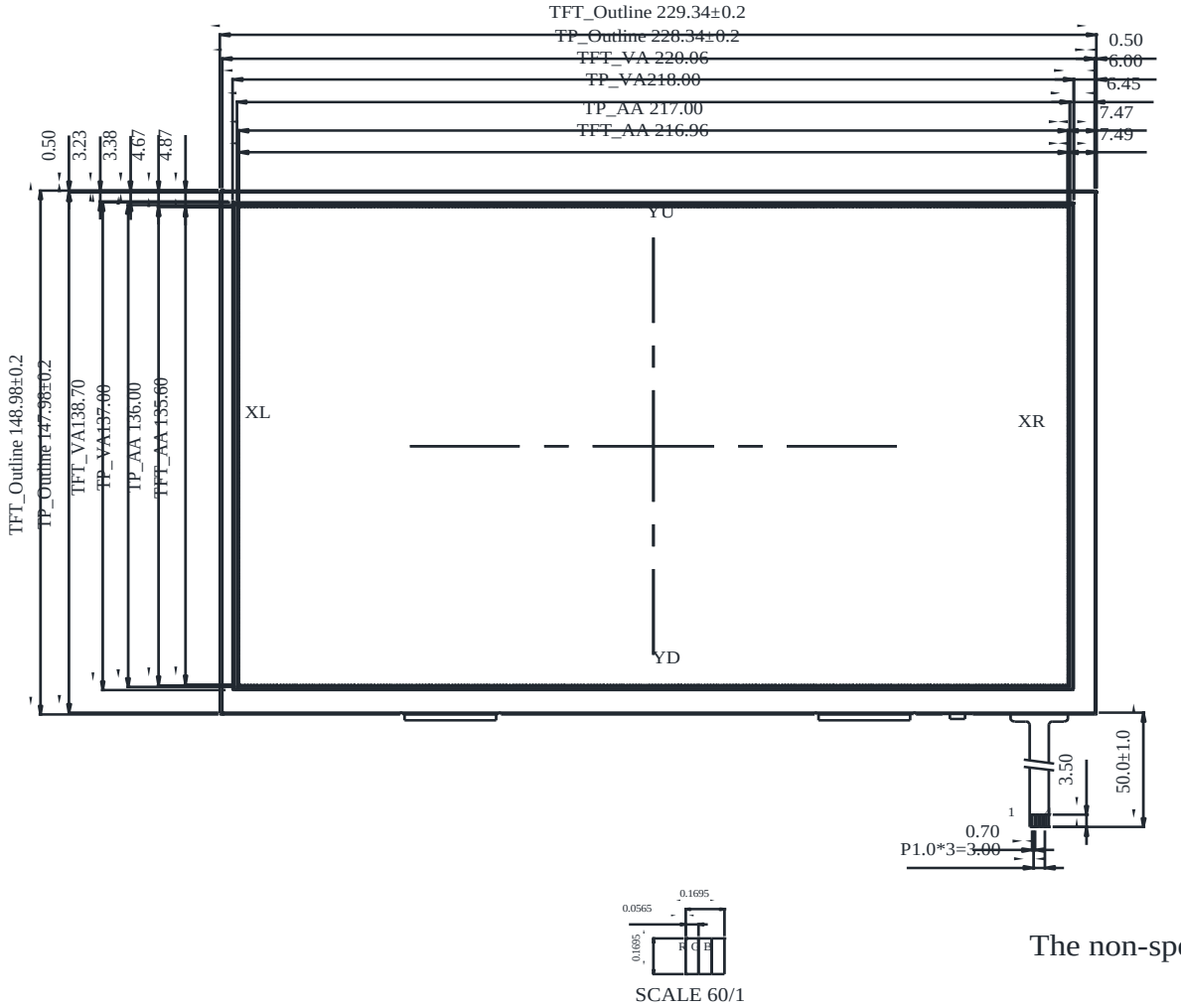



PIN NO.	SYMBOL
1	XL
2	YD
3	XR
4	YU

SCALE 60/1

The non-specified tolerance of dimension is ±0.3 mm .

PIN NO.	SYMBOL	PIN NO.	SYMBOL
1	VCOM	21	Rxin3+
2	VDD	22	GND
3	VDD	23	NC
4	NC	24	NC
5	NC	25	GND
6	NC	26	NC
7	GND	27	NC
8	Rxin0-	28	NC
9	Rxin0+	29	AVDD
10	GND	30	GND
11	Rxin1-	31	LED-
12	Rxin1+	32	LED-
13	GND	33	NC
14	Rxin2-	34	NC
15	Rxin2+	35	VGL
16	GND	36	NC
17	RxCLK-	37	NC
18	RxCLK+	38	VGH
19	GND	39	LED+
20	Rxin3-	40	LED+

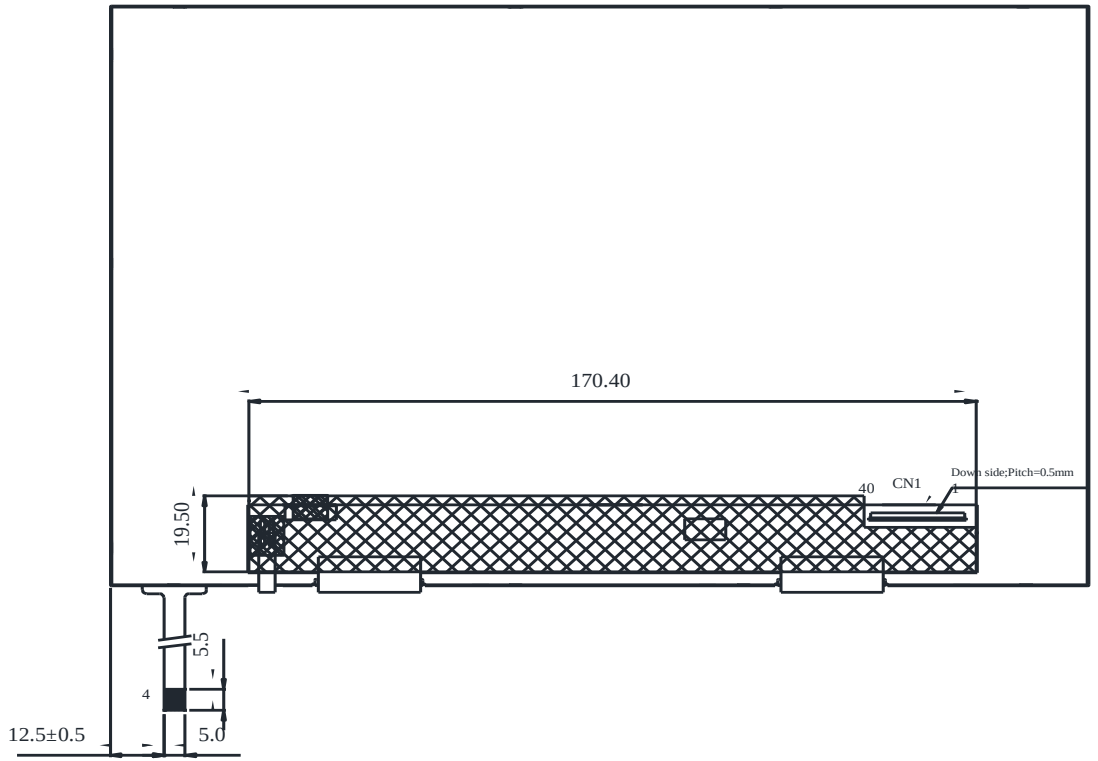

The non-specified tolerance of dimension is ±0.3 mm .

winstar

LCM Sample Estimate Feedback Sheet

Module Number： _____ **Page: 1**

1、Panel Specification：

1. Panel Type： □ Pass □ NG ,_____
2. View Direction： □ Pass □ NG ,_____
3. Numbers of Dots： □ Pass □ NG ,_____
4. View Area： □ Pass □ NG ,_____
5. Active Area： □ Pass □ NG ,_____
6. Operating Temperature： □ Pass □ NG ,_____
7. Storage Temperature： □ Pass □ NG ,_____
8. Others：_____

2、Mechanical Specification：

1. PCB Size： □ Pass □ NG ,_____
2. Frame Size： □ Pass □ NG ,_____
3. Material of Frame： □ Pass □ NG ,_____
4. Connector Position： □ Pass □ NG ,_____
5. Fix Hole Position： □ Pass □ NG ,_____
6. Backlight Position： □ Pass □ NG ,_____
7. Thickness of PCB： □ Pass □ NG ,_____
8. Height of Frame to PCB： □ Pass □ NG ,_____
9. Height of Module： □ Pass □ NG ,_____
10. Others： □ Pass □ NG ,_____

3、Relative Hole Size：

1. Pitch of Connector： □ Pass □ NG ,_____
2. Hole size of Connector： □ Pass □ NG ,_____
3. Mounting Hole size： □ Pass □ NG ,_____
4. Mounting Hole Type： □ Pass □ NG ,_____
5. Others： □ Pass □ NG ,_____

4、Backlight Specification：

1. B/L Type： □ Pass □ NG ,_____
2. B/L Color： □ Pass □ NG ,_____
3. B/L Driving Voltage (Reference for LED Type)： □ Pass □ NG ,_____
4. B/L Driving Current： □ Pass □ NG ,_____
5. Brightness of B/L： □ Pass □ NG ,_____
6. B/L Solder Method： □ Pass □ NG ,_____
7. Others： □ Pass □ NG ,_____

>> **Go to page 2** <<

5、Electronic Characteristics of Module：

1.	Input Voltage：	□ Pass	□ NG ,_____
2.	Supply Current：	□ Pass	□ NG ,_____
3.	Driving Voltage for LCD：	□ Pass	□ NG ,_____
4.	Contrast for LCD：	□ Pass	□ NG ,_____
5.	B/L Driving Method：	□ Pass	□ NG ,_____
6.	Negative Voltage Output：	□ Pass	□ NG ,_____
7.	Interface Function：	□ Pass	□ NG ,_____
8.	LCD Uniformity：	□ Pass	□ NG ,_____
9.	ESD test：	□ Pass	□ NG ,_____
10.	Others：	□ Pass	□ NG ,_____

6、Summary：

Sales signature：_____

Customer Signature：_____ **Date**：____/____/____