Data sheet | Item number: 788-169

Basic relay; Nominal input voltage: 110 VDC; 1 changeover contact; Limiting continuous current: 16 A; with gold contacts; Module width: 13 mm

www.wago.com/788-169

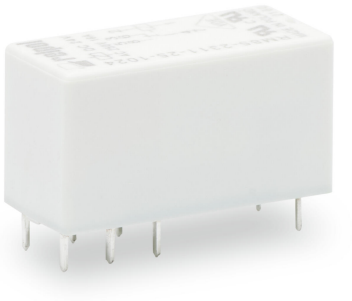

Picture differs from the item.

Similar to picture

RoHS ✓ Compliant

BOMcheck.net

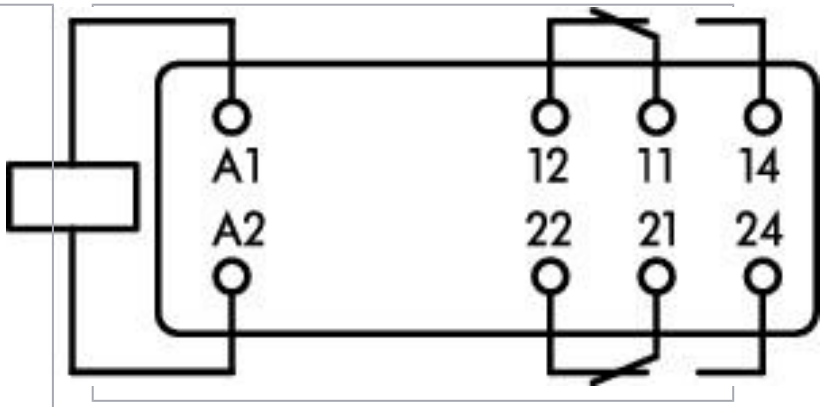

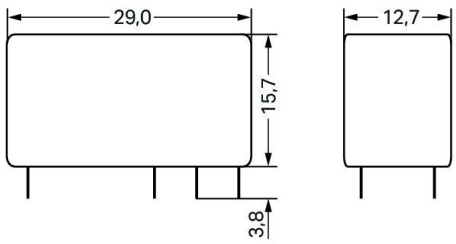

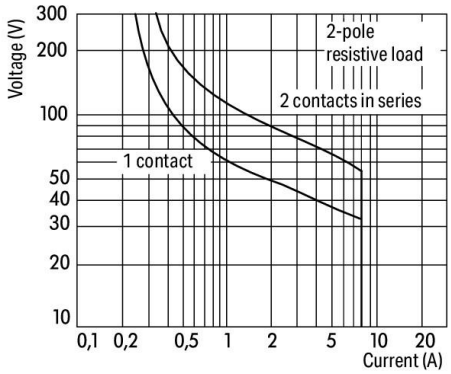

DC load limit curve

Item description

Note:

To prevent damaging the gold layer, 30 VDC switching voltages and 50 mA currents must not be exceeded. Higher switching power eventually evaporates the gold layer. The resulting deposits in the housing may reduce service life.

Subject to changes. Please also observe the further product documentation!

WAGO Kontakttechnik GmbH & Co. KG
Hansastr. 27
32423 Minden
Phone: +49571 887-0 | Fax: +49571 887-169
Email: info.de@wago.com | Web: www.wago.com

Do you have any questions about our products?
We are always happy to take your call at +49 (571) 887-44222.

Data
Technical data

Control circuit

Nominal input voltage U_N	DC 110 V

Load circuit

Number of changeover/switchover contacts	1
Contact material (relay)	AgNi + Au
Limiting continuous current	16 A
Switching voltage (max.)	AC 250 V
Switching power (resistive) (max.)	AC 4000 VA; DC (see load limit curve)
Switching capacity	AC-15: 6 A / AC 250 V; DC-13: 2 A / DC 24 V
Recommended minimum load	5 V / 2 mA / 50 mW
Pull-in time (typ.)	7 ms
Drop-out time (typ.)	3 ms
Electrical life (NO; resistive load; 23 °C)	30 x 10^3 switching operations
Mechanical life	30 x 10^6 switching operations

Safety and protection

Dielectric strength, control/load circuit (AC, 1 min)	5 kVrms
Dielectric strength, open contact (AC, 1 min)	1 kVrms
Protection type	IP40

Physical data

Width	12.7 mm / 0.5 inch
Height from the surface	15.7 mm / 0.618 inch

Material data

Weight	13 g

Environmental requirements

Surrounding air temperature (operation at U_N)	-40 … 85 °C

Subject to changes. Please also observe the further product documentation!

WAGO Kontakttechnik GmbH & Co. KG
Hansastr. 27
32423 Minden
Phone: +49571 887-0 | Fax: +49571 887-169
Email: info.de@wago.com | Web: www.wago.com

Do you have any questions about our products?
We are always happy to take your call at +49 (571) 887-44222.

Commercial data

Packaging type	BOX

Compatible products

General accessories



Item no.: 788-100
Relay socket; 1 changeover contact; for 15 mm basic relays; gray

www.wago.com/788-100

Downloads

Documentation

Bid Text

788-169 X81 - Datei	24. 8. 2020	xml 4.7 kB	Download
788-169 docx - Datei	24. 8. 2020	docx 14.5 kB	Download

Additional Information

Disposal; Electrical and electronic equipment, Packaging	V 1.0.0	pdf 265.8 kB	Download

Environmental Product Compliance

Compliance Search

Environmental Product Compliance 788-169 Basic relay; Nominal input voltage: 110 VDC; 1 changeover contact; Limiting continuous current: 16 A; with gold contacts; Module width: 13 mm	URL	Download

Installation Notes

Subject to changes. Please also observe the further product documentation!

WAGO Kontakttechnik GmbH & Co. KG
Hansastr. 27
32423 Minden
Phone: +49571 887-0 | Fax: +49571 887-169
Email: info.de@wago.com | Web: www.wago.com

Do you have any questions about our products?
We are always happy to take your call at +49 (571) 887-44222.